Commissioners Court July 21, 2020
NOTICE OF A MEETING OF THE
COMMISSIONERS COURT OF HAYS COUNTY, TEXAS

This Notice is posted pursuant to the Texas Open Meetings Act. (VERNONS TEXAS CODES ANN. GOV. CODE CH.551). The Hays County Commissioners Court will hold a meeting at **9:00 A.M.** on the **21st day of July 2020**, in the Hays County Courthouse, Room 301, San Marcos, Texas. An Open Meeting will be held concerning the following subjects:

CALL TO ORDER
INVOCATION
PLEDGE OF ALLEGIANCE - **Pledge of Allegiance to the American Flag & Pledge of Allegiance to the Texas Flag**
ROLL CALL

PUBLIC COMMENTS

At this time **3-MINUTE** comments will be taken from the audience on Non-Agenda related topics. To address the Court, please submit a Public Participation/ Witness Form to the County Clerk. Please Complete the Public Participation/ Witness Form in its Entirety.
NO ACTION MAY BE TAKEN BY THE COURT DURING PUBLIC COMMENTS.

PRESENTATIONS & PROCLAMATIONS

1	4	Update from the County Judge and staff regarding the Local Disaster Declaration and COVID-19. Possible discussion and action may follow. **BECERRA**

CONSENT ITEMS

The following may be acted upon in one motion.
A Commissioner, the County Judge, or a Citizen may request items be pulled for separate discussion and/or action.

2	5	Approve payments of County invoices. **VILLARREAL-ALONZO**
3	6	Approve the payment of United Healthcare claims. **VILLARREAL-ALONZO**
4	7-11	Authorize the Building Maintenance Department to have Chamberlin Roofing & Waterproofing repair two exterior walls of the Jacobs Well Nature Center that were damaged in recent flooding and amend the budget accordingly. **SHELL/T.CRUMLEY**
5	12	Authorize On-Site Sewage Facility Permit for 4 short-term rental cabins located at 7220 Creek Road, Dripping Springs, Texas 78620. **SMITH/STRICKLAND**
6	13-24	Authorize the replacement of one (1) failed 3-Ton HVAC system located at the Hays County Transportation building and amend the budget accordingly. **INGALSBE/BORCHERDING**
7	25-34	Approve renewal of IFB 2018-B07 Regulatory Road Signs with Centerline Supply, PathMark Traffic Equipment, LLC. and Vulcan, Inc. for one (1) additional year as stated in the original bid. Blacktop Industries, LLC. has opted not to renew their contract. **BECERRA/BORCHERDING**
8	35-40	Authorize the Transportation Department to purchase a new Dell Latitude laptop computer valued at $1,050.16 for the recently filled Planner position and amend the budget accordingly. **JONES/BORCHERDING**
9	41-57	Approve Utility Permits. **BECERRA/BORCHERDING**
10	58-61	Authorize the County Judge to execute a Second Amendment to City of Dripping Springs, County of Hays, Dripping Springs Independent School District, and Dripping Springs Library Board Agreement Regarding Extension and Clarification of the Cost Allocation and Reimbursement for the Dripping Springs Tax Increment Reinvestment Zone Number One and Tax Increment Reinvestment Zone Number Two. **SMITH**
11	62	Approve the cancellation of Commissioners Court on August 4, 2020. **INGALSBE**
12	63-73	Authorize the execution of the FY 2020 Grant Agreement with the U.S. Department of Justice, Drug Enforcement Administration for overtime reimbursements related to the Sheriff's Office Organized Crime Drug Enforcement Task Force (OCDETF) and amend the budget accordingly. **INGALSBE/CUTLER**
13	74-84	Accept the Fiscal Year 2019 Hays County Emergency Services District #7 Audit Report per Texas Health and Safety Code 775.082. **SHELL/VILLARREAL-ALONZO**
14	85-88	Authorize the County Judge to execute the Third Addendum to a Chapter 381 Chapter Economic Development Incentive Agreement between Hays County and Humpty Dumpty SSM, Ltd. executed on or about July 21, 2015. **SMITH**

15	89-127	Ratify the submission of a grant application to the Department of State Health Services (DSHS) for the Tuberculosis Prevention and Control - Federal Grant Program (TB/PC - Federal) in the amount of $26,757.00. **INGALSBE/T.CRUMLEY**
16	128	Amend various departmental operating, special revenue and capital project budgets in preparation for Fiscal Year 2020 3rd Quarter financial reporting. **INGALSBE/VILLARREAL-ALONZO**
17	129-131	Amend the Transportation Department's budget for road-building materials valued at $33,108.40 to receive approximately 520 tons of Limestone Rock Asphalt, Type II, Grade DS material from the Texas Department of Transportation through the 2020 TxDOT Surplus Program and add to the department's inventory. **BECERRA/BORCHERDING**

ACTION ITEMS

ROADS

18	132-173	Discussion and possible action to authorize the County Judge to execute a Professional Services Agreement/Contract between Hays County and HNTB Corporation to provide environmental and public involvement services related to the FM 150 (Center St) relocation of UP switching line (Kyle UPRR Siding Relocation) project as part of the 2016 Road Bond Program. **JONES**
19	174-175	Discussion and possible action to hold a public hearing to reduce the current 60 MPH speed limit to 45 MPH on the west end of Winters Mill Parkway for the new WISD Blue Hole Primary school. **SHELL/BORCHERDING**
20	176-213	Discussion and possible action to authorize the County Judge to execute a Professional Services Agreement/Contract between Hays County and Bowman Consulting Group, Ltd to provide Design Engineering services for FM 150 CTL Gap project in Precinct 1. **INGALSBE/BORCHERDING**
21	214-256	Discussion and possible action to authorize the County Judge to execute a Professional Services Agreement/Contract with Cobb, Fendley & Associates, Inc. to provide utility coordination services for RM 967 Safety Turn Lanes (Buda Sports Complex Drive, Hays CISD High School No. 3, and Oak Forest Drive Intersections) in Precinct 2 as part of the Road Bond Program. **JONES/BORCHERDING**
22	257	Discussion and possible action to approve the selection of Binkley & Barfield, Inc. to provide utility coordination services for RM 12 at RM 3237 intersection project in Precinct 3; and to authorize staff and counsel to negotiate a contract. **SHELL/BORCHERDING**

SUBDIVISIONS

23	258-261	PLN-1475-NP; Discussion and possible action to approve the final plat for O'Neil Ranch, Tract 7 Subdivision. **SMITH/PACHECO**

MISCELLANEOUS

24	262-264	Discussion and possible action to authorize the County Judge to execute and rental agreement between Hays County and Waterlogic USA to replace water units at the Transportation Departments Wimberley and Driftwood Yards. **SHELL/SMITH**
25	265-267	Discussion and possible action to award RFP 2020-P11 Election Ballot Printing, Insertion and Mailing Services to Runbeck Election Services and authorize staff and General Counsel to negotiate a contract. **BECERRA/ANDERSON**
26	268	Discussion and possible action to authorize the Constable Pct. 4 Office to utilize salary savings to purchase essential equipment for Motor Officers and Fleet Maintenance and amend the budget accordingly. **SMITH/HOOD**
27	269	Discussion and possible action to issue variance from Hays County Rules for Onsite Sewage Facilities Section M for an OSSF permit at 901 Williamson Rd, Buda, TX 78610. **SHELL/STRICKLAND**
28	270	Discussion and possible action to identify funds for Administration Costs associated with the Emergency Cash Assistance Program (ECAP) pursuant to Chapter 381 of the Texas Local Government Code and amend the budget accordingly. **SHELL**

EXECUTIVE SESSIONS

The Commissioners Court will announce it will go into Executive Session, if necessary, pursuant to Chapter 551 of the Texas Government Code, to receive advice from Legal Counsel to discuss matters of land acquisition, litigation, and personnel matters as specifically listed on this agenda. The Commissioners Court may also announce it will go into Executive Session, if necessary, to receive advice from Legal Counsel regarding any other item on this agenda.

29	271	Executive Session pursuant to Sections 551.071 and 551.074 of the Texas Government Code: consultation with counsel and deliberation regarding all individual positions in the Hays County Office of Emergency Services. Possible discussion and/or action may follow in open Court including but not limited to appointment and employment of the Hays County Fire Marshal (contingent upon an acceptable background check and acceptance of an offer of employment) and/or the hiring of the Director of the Office of Emergency Services (contingent upon an acceptable background check and acceptance of an offer of employment). **SHELL**

STANDING AGENDA ITEMS

The Commissioners Court utilizes Standing Agenda Items to address issues that are frequently or periodically discussed in court. This section allows the Court to open the item when a need for discussion arises.

30	Discussion and possible action related to the burn ban and/or disaster declaration. **BECERRA**
31	Discussion related to the Hays County inmate population, to include current population counts and costs. **BECERRA**
32	Discussion of issues related to the Hays County Census program including updates from Jessica Mejia. **BECERRA**
33	Discussion of issues related to the Hays County Jail, and the planning of projects pertaining to the public safety facilities needs within the County. Possible action may follow. **INGALSBE/CUTLER**
34	Discussion of issues related to Electro Purification including updates on the filed application. Possible action may follow. **SHELL**

ADJOURNMENT

Posted by 5:00 o'clock P.M. on the 17th day of July, 2020

COMMISSIONERS COURT, HAYS COUNTY, TEXAS

_____

CLERK OF THE COURT

Hays County encourages compliance with the Americans with Disabilities Act (ADA) in the conduct of all public meetings. To that end, persons with disabilities who plan to attend this meeting and who may need auxiliary aids such as an interpreter for a person who is hearing impaired are requested to contact the Hays County Judge's Office at (512) 393-2205 as soon as the meeting is posted (72 hours before the meeting) or as soon as practical so that appropriate arrangements can be made. While it would be helpful to receive as much advance notice as possible, Hays County will make every reasonable effort to accommodate any valid request regardless of when it is received. Braille is not available.

AGENDA ITEM REQUEST FORM

Hays County Commissioners Court
Tuesdays at 9:00 AM

Request forms are due in Microsoft Word Format via email by 2:00 p.m. on Wednesday.

AGENDA ITEM

Update from the County Judge and staff regarding the Local Disaster Declaration and COVID-19. Possible discussion and action may follow.

ITEM TYPE	MEETING DATE	AMOUNT REQUIRED
PROCLAMATIONS/PRESENTATIONS	July 21, 2020	

LINE ITEM NUMBER

AUDITOR USE ONLY

AUDITOR COMMENTS:

PURCHASING GUIDELINES FOLLOWED: N/A **AUDITOR REVIEW:** N/A

REQUESTED BY	SPONSOR	CO-SPONSOR
	BECERRA	N/A

SUMMARY

Information will be presented during Court.

AGENDA ITEM REQUEST FORM

Hays County Commissioners Court
Tuesdays at 9:00 AM

Request forms are due in Microsoft Word Format via email by 2:00 p.m. on Wednesday.

AGENDA ITEM

Approve payment of County invoices.

ITEM TYPE	MEETING DATE	AMOUNT REQUIRED
CONSENT	July 21, 2020	

LINE ITEM NUMBER

AUDITOR USE ONLY

AUDITOR COMMENTS:

PURCHASING GUIDELINES FOLLOWED: N/A **AUDITOR APPROVAL:** N/A

REQUESTED BY	SPONSOR	CO-SPONSOR
Auditor's Office	VILLARREAL-ALONZO	N/A

SUMMARY

AGENDA ITEM REQUEST FORM

Hays County Commissioners Court
Tuesdays at 9:00 AM

Request forms are due in Microsoft Word Format via email by 2:00 p.m. on Wednesday.

AGENDA ITEM

Approve the payment of United Healthcare claims.

ITEM TYPE	MEETING DATE	AMOUNT REQUIRED
CONSENT	July 21, 2020	

LINE ITEM NUMBER

AUDITOR USE ONLY

AUDITOR COMMENTS:

PURCHASING GUIDELINES FOLLOWED: N/A **AUDITOR APPROVAL:** N/A

REQUESTED BY	SPONSOR	CO-SPONSOR
Auditor's Office	VILLARREAL-ALONZO	N/A

SUMMARY

AGENDA ITEM REQUEST FORM

Hays County Commissioners Court
Tuesdays at 9:00 AM

Request forms are due in Microsoft Word Format via email by 2:00 p.m. on Wednesday.

AGENDA ITEM

Authorize the Building Maintenance Department to have Chamberlin Roofing & Waterproofing repair two exterior walls of the Jacobs Well Nature Center that were damaged in recent flooding and amend the budget accordingly.

ITEM TYPE	MEETING DATE	AMOUNT REQUIRED
CONSENT	July 21, 2020	$5,689

LINE ITEM NUMBER

001-695-00.5741

AUDITOR USE ONLY

AUDITOR COMMENTS:

PURCHASING GUIDELINES FOLLOWED: YES **AUDITOR REVIEW:** MARISOL VILLARREAL-ALONZO

REQUESTED BY	SPONSOR	CO-SPONSOR
T. CRUMLEY	SHELL	N/A

SUMMARY

In a recent heavy rain event, the Jacobs Well Nature Center was damaged by flood waters. Two exterior walls of the Nature Center need to be repaired and a watertight seal added. The Building Maintenance Department received a proposal from Chamberlin Roofing & Waterproofing for the work. Chamberlin is a member of Choice Partners Co-op, and funding for this repair has been identified in the current Building Maintenance FY20 budget.

Attachment:
Chamberlin Roofing & Waterproofing Proposal
Choice Partners Contract # 20-018-MJ-06

Budget Amendment:
Decrease .5451 Building Maintenance and Repair ($5,689)
Increase .5741 Misc. Capital Improvements $5,689

June 3, 2020

Mr. Chris Deichmann
Hays County
1699 Mt. Sharp Rd.
Wimberly, TX 78676

Project: Below Grade Waterproofing Choice Partners 20-018-MJ-06
Phone: (512) 214-4593
Email: Chris.Deichmann@co.hays.tx.us

Project Reference: 1699 Mt. Sharp Rd.

Dear Mr. Deichmann,

Chamberlin proposes to furnish all labor, materials, equipment, services, insurance and supervision required for a complete job generally described as follows:

WORK ITEM #1: Below Grade Flashing

1. Mobilize material, tools and equipment to job site.
2. Set up perimeter warning lines to perform scope of work.
3. Access to work area at ground level.
4. Repair areas are at the North and East elevation.
5. Work item is to repair the seal between the bottom of the wall and slab at the North and West
6. Landscaping and piping at the repair area will be removed by others.
7. Carefully remove top soil down to the slab. 2' wide and 2' deep.
8. Furnish and and install high perfomance roller grade membrane.
9. Furnish and install sealant at the base of the door on the East eleevation.
10. Tie in repars to form a water tight seal.
11. Clean up and dispose of repair related debris on a daily basis. **$5,689**

SALES TAX: 8.25% (Add if applicable)

TERMS: Balance due (15) days from date of invoice.

WARRANTY: Contractor's (1) year warranty.

ROOFING & SHEET METAL
- Modified Bitumen
- BUR
- EPDM
- TPO/PVC
- Metal

WATERPROOFING & CAULKING
- Joint Sealants
- Expansion Joints
- Membrane Waterproofing
- Elastomeric Coatings
- Water Repellents
- Waterblasting
- Concrete/Masonry Repair
- Dampproofing
- Flashing
- Traffic Coatings

ROOF MAINTENANCE & LEAK REPAIR
- Building Surveys
- Leak Repair
- Roof Maintenance

HOUSTON LOCATION
4545 Langfield
Houston, TX 77040
713.880.1432
713.880.8255 fax

OTHER LOCATIONS
- Dallas
- Austin
- San Antonio
- Oklahoma City
- Tulsa

Qualifications

- Chamberlin will use its best efforts to match the existing materials. Samples can be submitted for your approval upon request. All colors are to be selected from the manufacturer's **standard color chart.**
- All work to be performed during **normal business hours.** Normal business hours are Monday - Friday from 7:00am to 4:00pm.
- Pricing based upon mutually agreed to schedule and proper coordination of the work.
- Pricing is contingent on mutually agreeable contract terms and conditions and insurance certificates.
- T&M work will be completed at $85.00/hr with additional mark-up on materials.
- Our proposal is good for thirty (30) days from today's date.
- Our proposal is contingent upon including Exhibit A, Mold Disclaimer, to the contract.
- This proposal is based on signing Chamberlin's standard contract or mutually agreeable contract terms & conditions.
- Owner shall provide complete access to work areas free and clear of obstructions, reasonable use of electric, including 220v, potable water supply, dumpster and use of building's public restroom facilities for contractor's field personnel.
- Chamberlin is not responsible for recognizing, locating, or removing asbestos, PCB's, or other hazardous materials.
- Please be advised that the products and methods recommended in this proposal are based on our visual survey of the existing conditions & our years of practical experience of resolving similar problems for our customers. We are not design professionals, architects or registered engineers and are not responsible for determining building code compliance and do not perform design services.
- It appears the existing structure is generally sloped to drain and should generally remove surface water. In the event low areas are uncovered and ponding water results, tapered insulation or crickets may be required in order to promote positive drainage. These costs, if necessary, will be at an additional expense to the owner.
- Contractor's repair obligations during the Warranty Period are limited to the original price of the roofing or waterproofing installation. In no event shall contractor's liability exceed the original installation price of the roofing or waterproofing system, even if it is claimed or determined that the warranty provided has failed of its essential purpose.
- Chamberlin's **standard warranty excludes:** failures caused by failure of the substrate, moisture vapor transmission or hydrostatic pressure, abuse, conditions that exceed the limitations of the materials, sufficiency of the design, removal and replacement of the overburden materials, incidental and consequential damages.
- Unforeseen conditions or circumstances are not assumed nor anticipated in the scope of work proposed above and will be brought to the client's attention immediately upon discovery by Chamberlin personnel for a prompt resolution.
- Samples of products or systems presented for review are intended only to provide a general representation and are not necessarily an exact replica of the products or systems to be furnished or installed.
- This proposal is not for the sale of goods, but rather a service contract for the installation or application of products, systems, or materials. Therefore, **THE IMPLIED WARRANTIES OF MERCHANTIBILITY AND FITNESS FOR A PARTICULAR PURPOSE ARE HEREBY EXCLUDED.**
- Items not specifically mentioned above as being included are considered to be expressly excluded.
- Owner is responsible for all power shut-downs or re-routes of electricity necessary to perform the work including power lines too close to the building.
- The parties agree that Chamberlin shall be entitled to time and cost adjustments for any delays or price increases arising out of or relating to the effects of the recent Coronavirus outbreak.
- Pricing contingent on all scopes of work ready for installation upon mobilization to jobsite. Any delays in execution not due to Chamberlin, rescheduling without prior notice, or changes to scope of work detailed above will result in additional costs. This job is based on **_1_** mobilization(s). Additional mobilizations will be a minimum of $850.00 per mobilization.

- ***All work, labor and material installed by Chamberlin is warranted for one full year. However, because leak repairs are made on a "best effort" basis, if leak re-occurs and labor or materials installed by Chamberlin have not failed, additional investigation and repairs will be at an additional charge. Contractor's repair obligations during the Warranty Period are limited to the original price of the roofing or waterproofing installation. In no event shall contractor's liability exceed the original installation price of the roofing or waterproofing system, even if it is claimed or determined that the warranty provided has failed of its essential purpose. The existing water leak could be a contributing element to the presence of mold or mildew. Attempts by Chamberlin Houston, LLC. to resolve water intrusion should not be construed as an abatement, cure or prevention of mold or mildew. Our proposal is contingent upon including Exhibit A, Mold Disclaimer. We do not perform such services. Any alteration or deviation from above specifications involving extra costs will be executed only upon written orders and will become an extra charge over and above the estimate. Workmen's Compensation and General Liability Insurance on above work will be provided by Chamberlin Houston, LLC.***

Exclusions

- Taxes (Unless break-out above is added), building permit, retainage, P & P Bonds, fees, liquidated damages, overtime, window cleaning, accelerated schedules, field or laboratory testing, mockups, temporary facilities or utility hook-ups, decking repair or replacement, removal, disconnect or re-connection of mechanical, electrical, and communication equipment and lightning protection equipment re-certification or re-location (unless specifically noted in scope of work).

Submitted by: _____
Cell: 713-857-7518
Email: vpatterson@chamberlinltd.com

Accepted by:_____ Date: _____

Note: By signing above, both parties agree that faxed, scanned or emailed signatures will be treated as originals.

CONFIDENTIAL TRADE SECRET INFORMATION: This document contains confidential and proprietary information that is the exclusive property of Chamberlin. Disclosure, copying or distribution of any portion of this document to any person without the prior written consent of a Chamberlin authorized manager is strictly prohibited.

Copyright, 2010 Chamberlin Roofing & Waterproofing All Rights Reserved.

Exhibit A

Mold Disclaimer

Owner agrees that should Contractor discover the presence of asbestos, mold, fungi spores and/or any other hazardous chemical or biological agent on the job site, Contractor reserves the right to stop work and report said condition to the owner, and require the full remediation of condition by the owner before proceeding the work. Contractor shall be entitled to additional payment from owner for expenses incurred from the stopping and starting of work. In no case shall contractor be responsible or liable for detection, removal, disposal, or remediation of any asbestos, mold, mildew, fungi, spores or other hazardous chemical or biological agent. Owner hereby expressly releases and discharges contractor from any and all liability, claims, causes of action, or damages whether actual or consequential, arising out of tort or under contract, for personal injury, property damage, illness, allergic reactions, disease, and/or death resulting from or related to asbestos, mold, mildew, fungi, spores, and/or other hazardous chemical or biological agent.

OWNER AGREES TO INDEMNIFY AND SAVE AND HOLD HARMLESS CONTRACTOR FROM AND AGAINST ANY AND ALL CLAIMS, DAMAGES, LOSSES AND CAUSES OF ACTION FOR BREACH OF CONTRACT, BREACH OF WARRANTY, OR FOR THE NEGLIGENCE OF CONTRACTOR AND/OR ITS SUBCONTRACTORS WHICH ARE BROUGHT BY OWNER AND/OR ITS AGENTS, EMPLOYEES, RELATIVES, INVITES OR LICENSEES, ARISING OUT OF OR RELATING TO PROPERTY DAMAGE, PERSONAL INJURY, ILLNESS, ALLERGIC REACTIONS, DISEASE OR DEATH RESULTING FROM ASBESTOS, MOLD FUNGI SPORES AND/OR ANY OTHER HAZARDOUS CHEMICAL OR BIOLOGICAL AGENT ON THE JOB SITE.

AGENDA ITEM REQUEST FORM

Hays County Commissioners Court

Tuesdays at 9:00 AM

Request forms are due in Microsoft Word Format via email by 2:00 p.m. on Wednesday.

AGENDA ITEM

Authorize On-Site Sewage Facility Permit for 4 short-term rental cabins located at 7220 Creek Road, Dripping Springs, Texas 78620.

ITEM TYPE	MEETING DATE	AMOUNT REQUIRED
CONSENT	July 21, 2020	

LINE ITEM NUMBER

AUDITOR USE ONLY

AUDITOR COMMENTS:

PURCHASING GUIDELINES FOLLOWED: N/A **AUDITOR REVIEW:** N/A

REQUESTED BY	SPONSOR	CO-SPONSOR
Caitlyn Strickland, Director of Development Services	SMITH	N/A

SUMMARY

April McLaughlin with Cricket Hill Ranch is proposing an OSSF to serve 4 short-term rental cabins. This 15.00-acre tract of land will be served by a private well.
The system designer, Stephen Jetton, R.S., has designed a proprietary treatment system with flow equalization. After treatment, the effluent will be dispersed via surface application for a maximum daily rate of 400 gallons.

AGENDA ITEM REQUEST FORM

Hays County Commissioners Court
Tuesdays at 9:00 AM

Request forms are due in Microsoft Word Format via email by 2:00 p.m. on Wednesday.

AGENDA ITEM

Authorize the replacement of one (1) failed 3-Ton HVAC system located at the Hays County Transportation building and amend the budget accordingly.

ITEM TYPE	MEETING DATE	AMOUNT REQUIRED
CONSENT	July 21, 2020	$5,104

LINE ITEM NUMBER

020-710-00.5719_700

AUDITOR USE ONLY

AUDITOR COMMENTS:

PURCHASING GUIDELINES FOLLOWED: YES **AUDITOR REVIEW:** MARISOL VILLARREAL-ALONZO

REQUESTED BY	SPONSOR	CO-SPONSOR
J. Borcherding	INGALSBE	N/A

SUMMARY

One of the HVAC systems located at the Transportation building has failed and needs to be replaced. The current unit has failed, is about 19 years old, and is no longer able to be repaired. The current unit will be replaced with a 3-Ton Carrier with a Heat Pump Split System. SI Mechanical will furnish and install under IFB 2017-B06. Funding for this replacement has been identified within the Transportation Departments Operating budget.

Attachments:
SI Mechanical Proposal
HVAC Certified Drawings and Specs
Photo of current unit tags

Budget Amendment:

Decrease	020-710-00.5351	($5,104)
Increase	020-710-00.5719_700	$5,104

MECHANICAL, LLC

Estimate

July 7, 2020

TACLA00045892C
M-40866

To: Hays County - Transportation Dept

Attn: Chirs Deichmann & Lisa Griffin

0 ....**Model#**
0 ....**Serial#**

Re: Replace split sytem #10

0 ....**Unit#**

We propose to install the HVAC and/or PLUMBING WORK as outlined in the scope of work below.

Labor	Hours	Rate	Materials & Tools		Subcontractors	
Tech(s).....	**12**	**$95.00**	Materials.....	**$2,547.00**	Rental(s)....	**$0.00**
Hepler(s).....	**12**	**$65.00**	Markup per contract.....	**25%**	Crane.....	**$0.00**
Total.....		**$1,920.00**	**Total.....**	**$3,183.75**	**Total.....**	**$0.00**

HVAC/Plumbing Work: $5,103.75

Tax 8.25% $0.00

Total Price $5,103.75

Scope of Work:
1. Furnish and install: (1) 3-Ton Carrier with Heat Pump Split-System& (1) Honeywell Thermostat.
2. Lock-out, Tag-out & Deenergize energy source.
3. Disassemble and remove existing air handler for ceiling and condenser from house keeping pad.
4. Install new air handler and condenser in existing locations.
5. Pressure test system.
6. Evacuate and charge system.
7. Check operation.
8. Clean up work area.

Note: This is an estimate only, additional parts and labor may be required.

Bid Clarifications:
1. Sales tax included.
2. All work performed during normal hours.
3. No electrical of any kind.
4. Haul off old units.
5. No fire alarm or smoke detectors.
6. No coring, scanning, cutting, patching or concrete work.
7. No removal of walls or ceiling to access "the work".
8. No structural steel framing or roofing.

Note: No other repairs are in this proposal other then listed above.

Please authorize this repair; no parts have not been ordered. Parts will be ordered once the repairs are authorized. After receiving parts the repair can be scheduled.

Sincerely,

Josh Abbott
Service Department
Office# 512-593-6001 ext. 103
Cell# 512-423-2970

Signed:

Acceptance of Proposal:
The above prices, specifications and conditions are satisfactory and are hereby accepted. You are authorized to do the work as specified.

This proposal is conditional upon the following terms and conditions:

1. Customer agrees to pay S I Mechanical, LLC all sums due with respect to this proposal in accordance with the terms specified. Payments are due upon receipt of invoice. In the event payment is not received by S I Mechanical, LLC by the tenth day of the month following billing, such payment shall be considered past due. If default is made in payment of any sums due hereunder and it becomes necessary that this Agreement be placed in the hands of an attorney for collection, customer agrees to pay to S I Mechanical, LLC all costs of collection, including reasonable attorney's fee. S I Mechanical, LLC shall have the right to cancel this Agreement at any time, upon (5) day's written notice, if payments are called for herein are not made.

2. Cancellation Clause: This agreement can only be cancelled by customer upon a 30-day written notice. If in the event the customer cancels this agreement S I Mechanical, LLC will be due the balance of the annual contract for the current contract year or the cost plus profit incurred year to date, which ever is lesser of the two.

3. Customer waives any and every claim which arises in its favor and against S I Mechanical, LLC during the term of this Agreement for any all loss of, or damage to, any of its property, which loss or damage is covered by valid and collectible fire and extended coverage insurance policies, general liability policies, and workmen's compensation policies, to the extent that such loss or damage is recoverable under said insurance policies and such loss is not the result of the gross negligence or willful misconduct of S I Mechanical, LLC or failure of S I Mechanical, LLC to comply with the terms of this agreement.

4. It is agreed that S I Mechanical, LLC shall have no liability to customer or to customer's agents, servants, or employees or to any third parties for injuries to persons, or damage to property directly or indirectly resulting from the failure of any equipment or due to any other cause whatsoever, other than the gross negligence or willful misconduct of S I Mechanical, LLC, and customer agrees to indemnify S I Mechanical, LLC and hold it harmless from any loss, claim, damage, or expense, including attorney's fees, arising out of any such damage or injury. S I Mechanical, LLC shall not be liable for any lost rents, income, or profits nor any indirect, remote, special, or consequential damages from whatever cause and howsoever the same may arise, nor for any delay, loss damage, or injury caused by acts of God, labor disturbances, non-delivery, or unavailability of manpower or material, or any other event beyond S I Mechanical, LLC's control. S I Mechanical, LLC agrees to indemnify customer and hold it harmless from any loss, claim, damage or injury caused by the gross negligence or willful misconduct of S I Mechanical, LLC.

The entire liability of S I Mechanical, LLC and client's exclusive remedy for damages from any cause in connection with the work, including, but not limited to, nonperformance or misrepresentation, and regardless of the form of action, shall be limited to the annual Agreement fee of the current year.

5. This contract constitutes the entire agreement and is not assignable by either party. This Agreement may be modified or amended only by written agreement of both parties. S I Mechanical, LLC is inclusive of it's affiliated companies.

6. S I Mechanical, LLC and it's affiliated companies shall not be responsible to customer or anyone else for the system design or its performance in maintaining design conditions.

7. The Heating, Ventilation, and Air-Conditioning equipment and systems installed, repaired or serviced as a part of this agreement may, under certain conditions, become conducive to or incidentally support microbiological growth. S I Mechanical, LLC makes no claim nor warrants its work to protect against, eliminate or inhibit any type of microbiological growth, including but not limited to, molds, fungi and other related matter, in or around duct systems, HVAC and related equipment or areas adjacent to or in proximity of such systems and equipment.

8. Customer agrees to indemnify, defend, and hold harmless, S I Mechanical, LLC, its officers, directors, agents, assigns, successors and employees from any against any and all claims of damages or injury, of any kind or nature whatsoever, including claims of property damage or personal injury, due to any such microbiological growth in or emanating from any of the customer's HVAC equipment or HVAC systems.

9. Some projects require the use of heavy commercial hoisting or rigging equipment. While all precautions will be exercised to protect the customer's property. S I Mechanical, LLC will not accept any responsibility for damage to parking lots, driveways, or landscaping that may occur as a result of normal hoisting and rigging operations, excluding negligence or accidents.

10. Unless indicated otherwise, all pricing is based upon work being performed during regular working hours of 8:00am to 4:30 pm, Monday through Friday, except holidays. If work is required at times other than normal working hours, the customer agrees to pay the difference between the regular and overtime charge.

11. If S I Mechanical, LLC encounters asbestos or polychlorinated biphenyl (PCB)_) on the site, S I Mechanical, LLC will stop work and report the evidence of such to the customer. S I Mechanical, LLC will not resume work in the affected area until the asbestos or PCB has been removed or determined harmless by a qualified laboratory.

12. S I Mechanical, LLC shall comply with it's affirmative action, environmental and safety policies as mandated by the government.

13. SI Mechancal, LLC will make every effort to locate and avoid building utilities. It shall be the responsibility of the Customer to provide reference drawings and locate all hidden utilities in and around the work site. SI Mechanical relies on this information to execute the work. Damages to unmarked and unforseen building utilities is the responsibility of the Customer.

14. SI Mechanical, LLC does not accept consequencial damages or liquidated damges unless agreed to in writing.

Hays Co PCT 5

Submittal Cover Sheet
Unit Report
Performance Summary Report
Certified Drawings
Feature Sheet

Unit Report For Hays Co Transportation

Project: SI Mechanical 07/07/2020
Prepared By:

Outdoor Unit Parameters

Unit Model:.....**24ACC**
Unit Size: ..... **3 Tons (Size 36)**
Voltage: .....**208/230-1-60** V-Ph-Hz

Indoor Coil Parameters

Unit Model:.....**FB4C**
Unit Size: .....**36,000 Btuh (Size 036)**
Cabinet Style:..... **TXV**
Voltage: ..... **208-1-60** V-Ph-Hz
Refrigerant Type:..... **Puron**
Heating Size:.....**No Heat**

Outdoor Unit Dimensions and Weight

Unit Length:.....**31.1875** in
Unit Width: .....**31.1875** in
Unit Height: .....**25.3125** in
Unit Shipping Weight: ..... **151.** lb

Indoor Coil Dimensions and Weight

Unit Length:.....**22.0625** in
Unit Width: ..... **17.625** in
Unit Height: ..... **49.625** in
Unit Shipping Weight: ..... **122.** lb

OTHER APPLICATIONS

The warranty period is five (5) years on the compressor, and one (1) year on all other parts. The warranty is the original owner only and is not available for subsequent owners.

Ordering Information

Part Number	Description	Quantity
Outdoor Unit		
24ACC436A003	Comfort Series Air Conditioner with Puron Refrigerant 3 Tons Cooling	1
	14 SEER @ ARI Conditions	
Indoor Coil		
FB4CNP036L00	FB4C Base Series Fan Coil with Puron 36000 BTU Cooling 208/230-1-60	1
	TXV	
	Aluminum	
Accessories		
KFCEH0901N10	10 kW, Electric Heater, Non-fused, 1 phase, with relays	1

The Product and Ratings Data in this program is subject to change at any time and without notice. Please refer to the latest product literature and the AHRI directory at www.ahridirectory.org for the most up-to-date information.

Performance Summary For Hays Co Transportation

Project: SI Mechanical 07/07/2020
Prepared By:

System Performance

System:	**24ACC/FB4C**	
System Quantity:	**1**	
Altitude:	**0.0**	ft
Linear Pipe Length:	**0.0**	ft
SEER @ ARI Conditions:	**14.0**	
EER @ ARI Conditions:	**12.0**	

Actual Clg Airflow:	**1176.0**	CFM
Standard Clg Airflow:	**1176.0**	CFM
Total Net Clg Capacity:	**33.48**	MBH
Net Sensible Clg Capacity:	**26.84**	MBH
Total System Power:	**2.82**	kW

System Parameters

Outdoor Unit Parameters

Unit Model:	**24ACC436A003**	
Unit Size (Nominal):	**3 Tons (Size 36)**	
Voltage:	**208/230-1-60**	V-Ph-Hz
Clg Ent Air DB Ambient:	**95.0**	°F

Indoor Coil Parameters

Unit Model:	**FB4CNP036L00**	
Unit Size (Nominal):	**36,000 Btuh (Size 036)**	
Voltage:	**208-1-60**	V-Ph-Hz
Ent Air DB:	**80.00**	°F
Ent Air WB:	**67.00**	°F
Ent Enthalpy:	**31.44**	BTU/lb
Lvg Air DB:	**58.87**	°F
Lvg Air WB:	**58.12**	°F
Lvg Enthalpy:	**25.11**	BTU/lb
Heating Size (Nominal):	**No Heat**	
Total External Static Pressure:	**0.50**	in wg

Electrical Data

Outdoor Electrical Data

Unit Voltage:	**208/230-1-60**	V-Ph-Hz
Fan Motor FLA:	**1.10**	Amps
MCA:	**18.1**	Amps
Max Fuse:	**30**	Amps
Operating Range Min:	**197**	V
Operating Range Max:	**253**	V
Compressor RLA:	**13.6**	Amps
Compressor LRA:	**79.0**	Amps

Indoor Electrical Data

Unit Voltage:	**208-1-60**	V-Ph-Hz
Motor HP:	**1/2**	HP
Motor FLA:	**4.1**	Amps

Accessory Electric Heater Data

EH Part Number:	**KFCEH0901N10**	
Electric Heater kW:	**10.0**	kW
For 2 wire operation (single circuit):		
Heater Amps:	**36.2**	Amps
Heater + Motor MCA:	**53.8**	Amps
Heater + Motor MOCP:	**60**	Amps
Accessory Voltage:	**208-1-60**	V-Ph-Hz

The Product and Ratings Data in this program is subject to change at any time and without notice. Please refer to the latest product literature and the AHRI directory at www.ahridirectory.org for the most up-to-date information.

Certified Drawing For Hays Co Transportation

Project: SI Mechanical
Prepared By:

07/07/2020

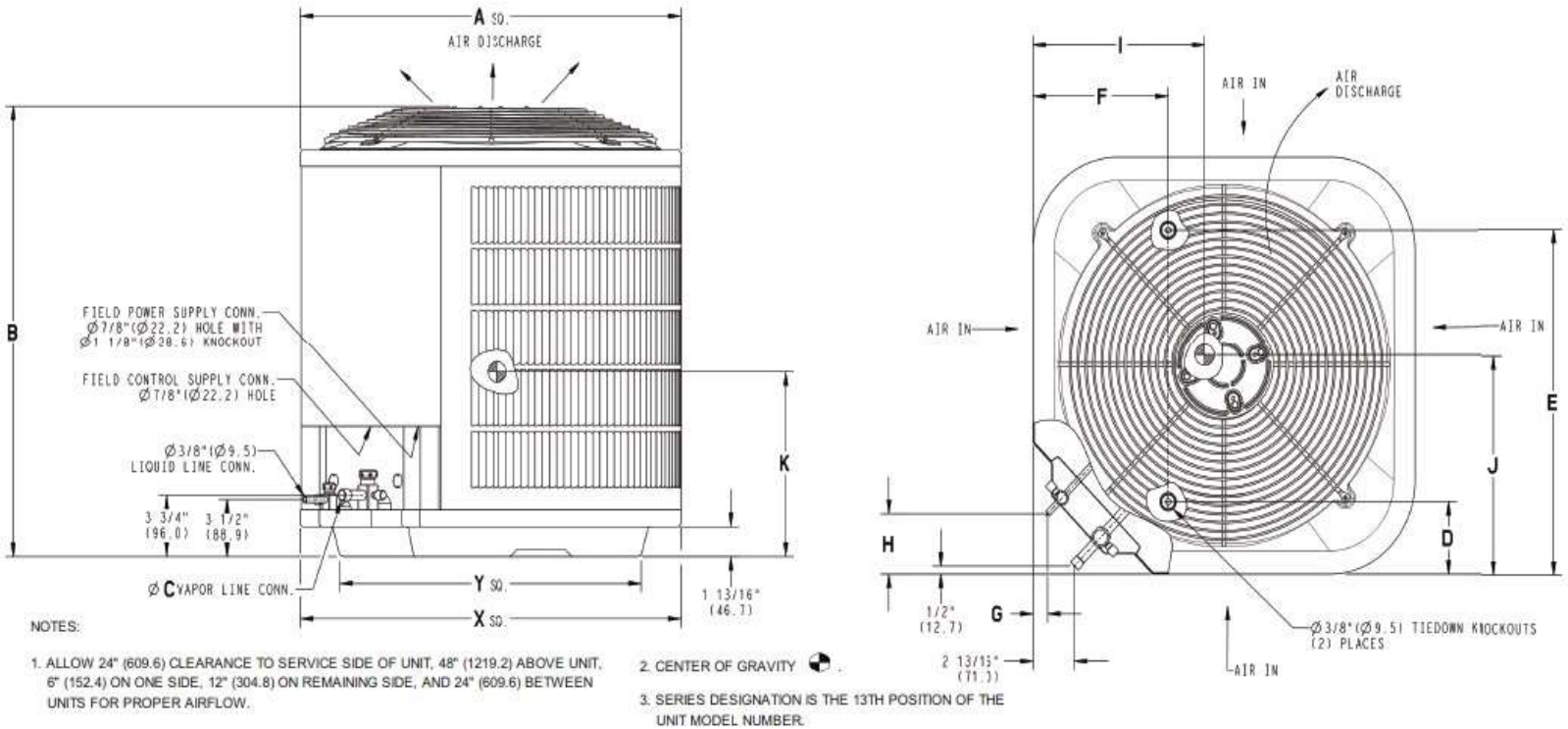

Outdoor Model

Unit Model:.....**24ACC**
Unit Size: ..... **3 Tons (Size 36)**
Voltage: .....**208/230-1-60** V-Ph-Hz
SEER:..... **14**
PartNumber:.....**24ACC436A003**

Shipping Dimensions and Weights	Outdoor Unit
Height	29.75 in
Width	33.31 in
Length	33.31 in
Operating Weight	134. lb
Shipping Weight	151. lb

Dimensions										
A	B	C	D	E	F	G	H	I	J	K
31.19 in	25.31 in	0.88 in	6.56 in	24.69 in	9.13 in	0.31 in	3.00 in	15.56 in	16.50 in	10.25 in

The Product and Ratings Data in this program is subject to change at any time and without notice. Please refer to the latest product literature and the AHRI directory at www.ahridirectory.org for the most up-to-date information.

Certified Drawing For Hays Co Transportation

Project: SI Mechanical
Prepared By:

07/07/2020

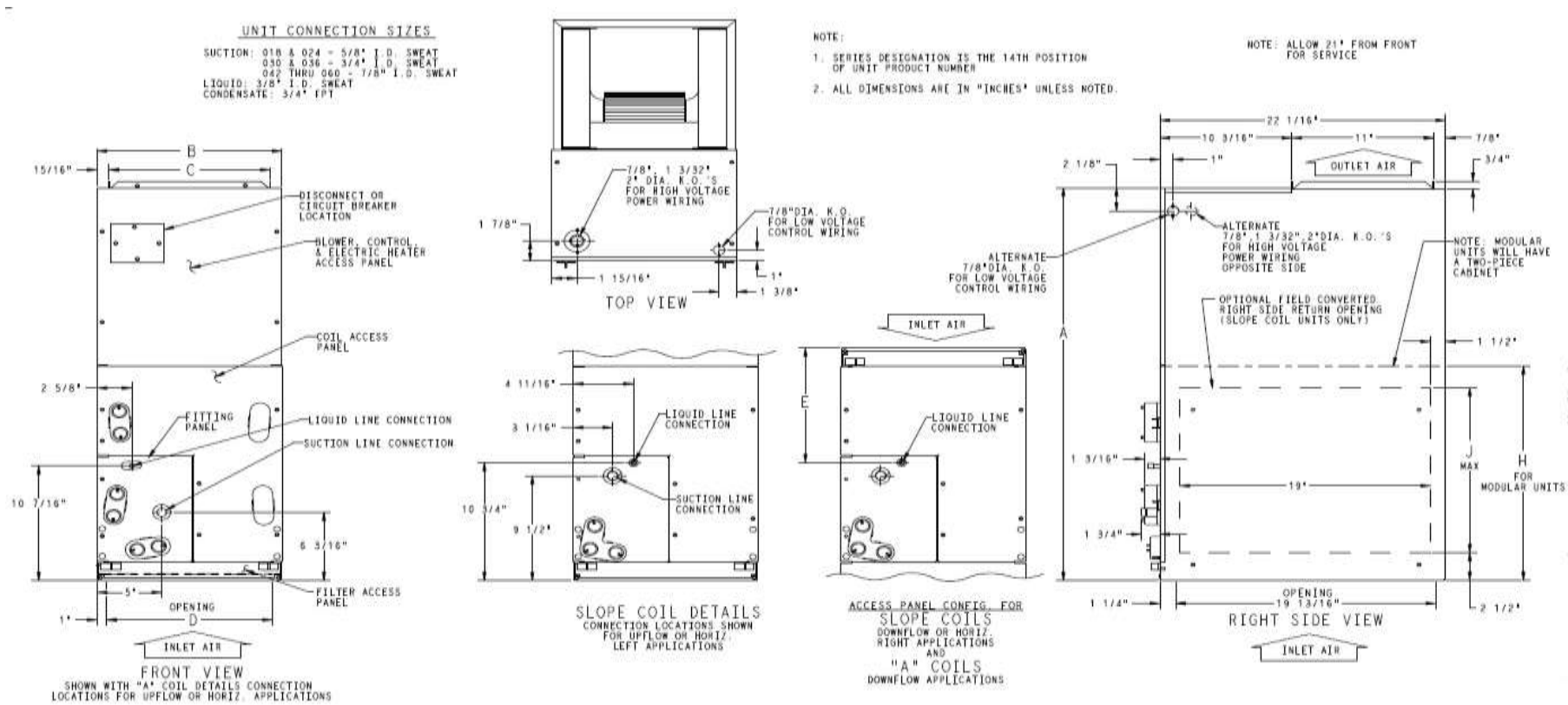

Indoor Coil

Unit Model: **FB4C**
Unit Size: **36,000 Btuh (Size 036)**
Voltage: **208-1-60** V-Ph-Hz
Cabinet Style: **TXV**
PartNumber: **FB4CNP036L00**

Dimensions and Weights	Indoor Coil
Height	49.63 in
Width	17.63 in
Length	22.06 in
Shipping Weight	122. lb

Dimensions								
A	B	C	D	E	F	G	H	J
49.63 in	17.63 in	15.75 in	15.63 in	15.38 in	23.13 in	23.63 in	--	17.00 in

The Product and Ratings Data in this program is subject to change at any time and without notice. Please refer to the latest product literature and the AHRI directory at www.ahridirectory.org for the most up-to-date information.

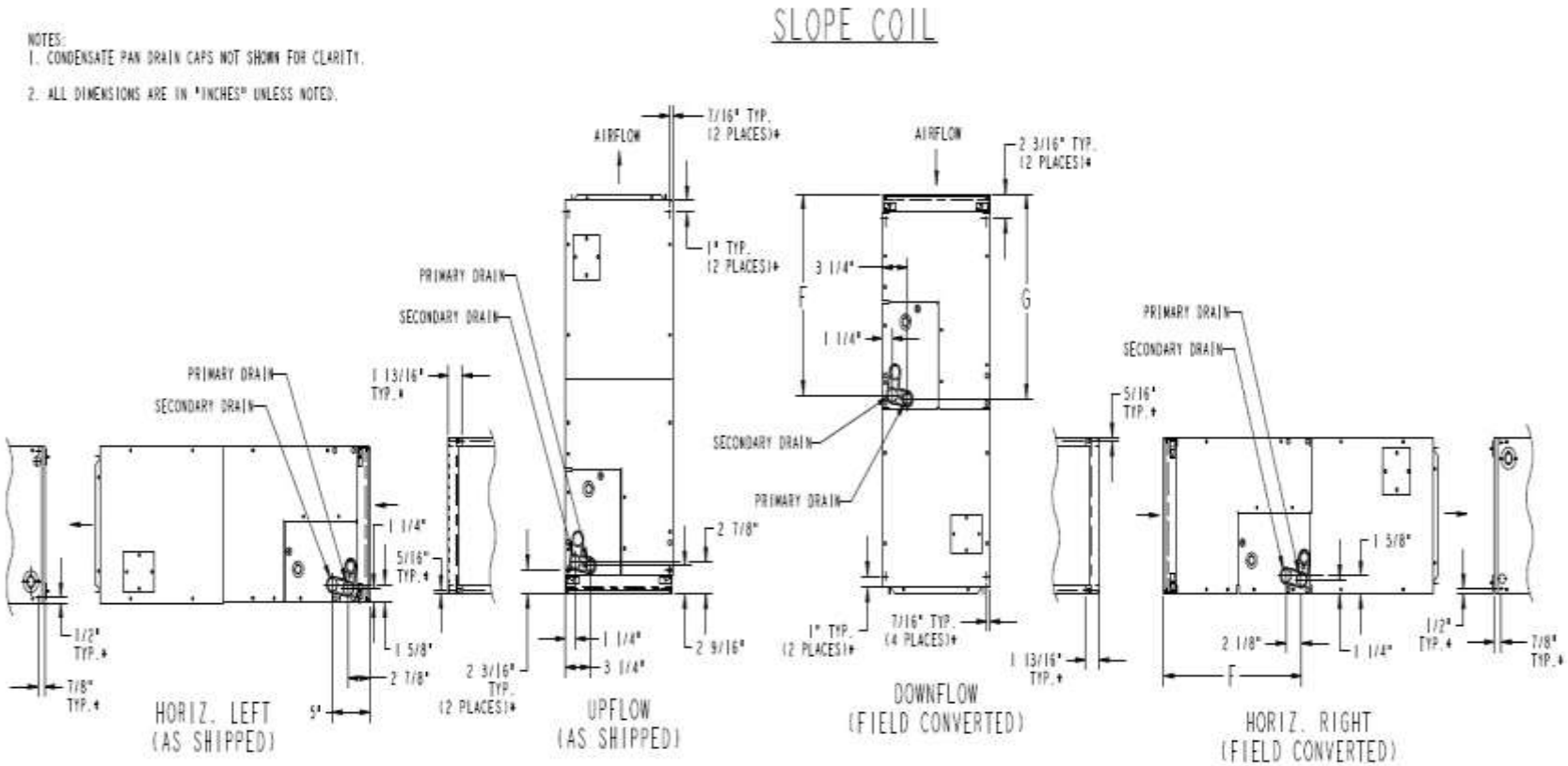

Indoor Coil

Unit Model:.....**FB4C**
Unit Size: .....**36,000 Btuh (Size 036)**
Voltage: .....**208-1-60** V-Ph-Hz
PartNumber:.....**FB4CNP036L00**

The Product and Ratings Data in this program is subject to change at any time and without notice. Please refer to the latest product literature and the AHRI directory at www.ahridirectory.org for the most up-to-date information.

24ACC4
Comfort™ 14 Air Conditioner
with Puron® Refrigerant
1–1/2 to 5 Nominal Tons

Carrier
turn to the experts

Product Data

Puron. Comfort SERIES

Carrier's Air Conditioners with Puron® refrigerant provide a collection of features unmatched by any other family of equipment. The 24ACC4 has been designed utilizing Carrier's non-ozone depleting Puron refrigerant.

NOTE: Ratings contained in this document are subject to change at any time. Always refer to the AHRI directory (www.ahridirectory.org) for the most up–to–date ratings information.

INDUSTRY LEADING FEATURES / BENEFITS

Efficiency

- 14.0 SEER / 11.0 – 13.5 EER (based on tested combination)
- Microtube Technology™ refrigeration system
- Indoor air quality accessories available

Comfort

- System supports Edge® Thermidistat™ or standard thermostat controls

Sound

- Sound level as low as 72 dBA

Reliability

- Non-ozone depleting Puron® refrigerant
- Scroll compressor
- Internal pressure relief valve
- Internal thermal overload
- Filter drier
- Balanced refrigeration system for maximum reliability

Durability

WeatherArmor™ protection package:

- Solid, durable sheet metal construction
- Dense wire coil guard

Applications

- Long–line – up to 250 feet (76.20 m) total equivalent length, up to 200 feet (60.96 m) condenser above evaporator, or up to 80 ft. (24.38 m) evaporator above condenser (See Longline Guide for more information.)
- Low ambient (down to –10°F/–23°C) with accessory kit

FB4C
Base Series Fan Coil
Sizes 018 thru 061

Carrier
turn to the experts

Product Data

A10082

AIR HANDLER TECHNOLOGY AT ITS FINEST

The FB4C fan coil has the proven technology of Carrier fan coil units with Puron® refrigerant as well as vertical and horizontal applications. The design features contoured condensate pans with rugged drain connections, ensuring that little water is left in the unit at the end of the cooling duty cycle. The lack of standing condensate and corrosion free pans improves IAQ and product life, features homeowners appreciate.

Standard features include grooved tubing and louvered fins. Coil circuiting has also been updated to make the most of all Carrier heat pumps and air conditioners. Units come with solid state fan controls, 1-inch (25mm) thick insulation with R-value of 4.2, multi-speed motors, and fully-wettable coils. Units can accommodate factory- and/or field-installed heaters from 3 to 30 kW.

The FB4C fan coil design is loaded with popular features. These fan coils utilize the latest in electronic commutation motor (ECM) technology through the use of high efficiency, multi-tap ECM motors allowing reliable air delivery with increased static pressure. It comes in a pre-painted (taupe metallic) galvanized steel casing and a factory-supplied power plug for ease of installation. The FB4C unit is shipped with a factory-installed Teflon-ring piston FB4CNF(018-048) or a Puron refrigerant TXV FB4CNP (018-061).

In order to meet the California Title 24 requirement of 1.4% air leakage at 0.5" water, an accessory kit is available. (Refer to Accessories section.

AHU-1

PRODUCT NO.	FA4ANF036000AGAA
MODEL NO.	FA4ANF036
SERIAL NO.	0203A69778
VOLTS	208 / 230
MOTOR HP	1/3
MOTOR FLA	2.4
PHASE/HERTZ	1/60
TEST STATIC	.35 IN. W.C.

REFRIGERANT 22 DESIGN PSIG 300

C UL US
LISTED FAN COIL
UNIT 3R39

RADCO
• CERTIFICATION • LISTING
• TESTING • INSPECTION
LISTING NO. 1175

APPROVED ACCESSORIES

KFAEH0201N05	KFAEH1301C05	KFAEH0301N08
KFAEH1401C08	KFAEH0401N10	KFAEH1501C10
KFAEH0601F20	KFAEH1701C20	KFAEH2201H10
KFAEH2301H15	KFAEH2401H20	KFAEH2801C15
KFAEH2501N09	KFAEH2601F15	KFCEH0101H10
KFCEH0201H15	KFCEH0301H20	KFCEH0501N05
KFCEH0601C05	KFCEH0801N08	KFCEH1001C08
KFCEH1401N09	KFCEH0901N10	KFCEH1101C10
KFCEH1501F15	KFCEH1701C15	KFCEH1601315
KFCEH1801F20	KFCEH1901C20	KFAEH0801315

ELECTRICAL INFORMATION FOR THIS UNIT

FOR FIELD INSTALLED ELECTRIC HEATERS. APPLY ELECTRICAL INFORMATION PLATE SUPPLIED WITH HEATER IN THIS BLOCK

SINGLE SUPPLY CIRCUIT

L1/L2 HEATER AMPS 0 — MIN. AMPACITY 3.0

MAX. OVERCUR. PROTECTION 15

DUAL SUPPLY CIRCUIT

L1/L2 HEATER AMPS N/A — MIN. AMPACITY N/A

MAX. OVERCUR. PROTECTION N/A

L3/L4 HEATER AMPS N/A — MIN. AMPACITY N/A

MAX. OVERCUR. PROTECTION N/A

HEAT PACK INSTALLED N/A

UNIT HAS INTEGRAL LIMIT CONTROL. MAX. OUTLET TEMP 200F. MOTOR THERMALLY PROTECTED. SEE INSTALLATION INSTRUCTIONS FOR SPECIFIC INSTALLATION REQUIREMENTS AND APPROVED ACCESSORY KIT INFORMATION. MAX. VOLTAGE TO GROUND OF SUPPLY CIRCUIT NOT TO EXCEED 120 VOLTS IF HEATER HAS CIRCUIT BREAKER CONTROL

COIL FOR COOLING ONLY EXCEPT WHEN INSTALLED AS PART OF A LISTED HEAT PUMP. APPROVED HEATERS MFG'D BY CAC/BDP. INDIANAPOLIS, IN

CLEARANCE TO COMBUSTIBLE MATERIALS TO BE 0" FOR CASING, PLENUM AND DUCT FOR UNITS WITH 0 TO 18 KW HEATERS. FOR UNITS WITH HEATERS 20 KW AND ABOVE CLEARANCE TO COMBUSTIBLE MATERIAL IS TO BE 0" TO CASING AND 1" FOR FIRST 36" OF PLENUM AND DUCT

CAUTION

PISTON IN THIS COIL MUST MATCH SIZE SHOWN ON OUTDOOR UNIT RATING PLATE. REPLACE IF NECESSARY. THIS UNIT IS EQUIPPED WITH PISTON

76

CAC/BDP
7310 West Morris Street
Indianapolis, IN 46231

321016-106 REV. G

AGENDA ITEM REQUEST FORM

Hays County Commissioners Court
Tuesdays at 9:00 AM

Request forms are due in Microsoft Word Format via email by 2:00 p.m. on Wednesday.

AGENDA ITEM

Approve renewal of IFB 2018-B07 Regulatory Road Signs with Centerline Supply, PathMark Traffic Equipment, LLC. and Vulcan, Inc. for one (1) additional year as stated in the original bid. Blacktop Industries, LLC. has opted not to renew their contract.

ITEM TYPE	MEETING DATE	AMOUNT REQUIRED
CONSENT	July 21, 2020	

LINE ITEM NUMBER

AUDITOR USE ONLY

AUDITOR COMMENTS:

PURCHASING GUIDELINES FOLLOWED: YES **AUDITOR REVIEW:** MARISOL VILLARREAL-ALONZO

REQUESTED BY	SPONSOR	CO-SPONSOR
Jerry Borcherding	BECERRA	N/A

SUMMARY

All terms and conditions remain unchanged and in full force and effect as stated in the original bid. The Road Department utilizes this contract for regulatory road signs throughout the County as needed.

Attachments:
Centerline Supply Renewal Letter and Related Party Disclosure Form
PathMark Traffic Equipment, LLC. Renewal Letter and Related Party Disclosure Form
Vulcan, Inc. Renewal letter and Related Party Disclosure Form
Blacktop Industries, LLC. decline to renew email

OFFICE OF THE COUNTY AUDITOR

Hays County Purchasing
712 S. Stagecoach Trail, Ste. 1071
San Marcos, Texas 78666
512-393-2273

Marisol Villarreal-Alonzo, CPA
County Auditor
marisol.alonzo@co.hays.tx.us

Vickie G. Dorsett
Assistant County Auditor
vickie.dorsett@co.hays.tx.us

June 16, 2020

Centerline Supply
9484 Corporate Dr.
Selma, TX 78154

RE: Annual contract renewal

The annual contract for Regulatory Road Signs, IFB 2018-B07, is scheduled to expire on July 31, 2020. This letter will serve as official notice that Hays County would like to exercise its second (2nd) option to renew the existing contract for one (1) additional year effective August 1, 2020-July 31, 2021, provided all terms and conditions remain unchanged and in full force and effect as provided in the original bid. If you are in agreement with the renewal terms, please acknowledge below and return one original to the Hays County Purchasing Office at the address listed above.

Please email purchasing@co.hays.tx.us if you wish to make modifications to the contract or have any questions. Thank you.

Sincerely,

Marisol Villarreal-Alonzo, CPA
Hays County Auditor

Signature	CENTERLINE SUPPLY Company
JASON BARRETT Printed Name	07/14/2020 Date

Approved by the Hays County Commissioners Court on: _____

Ruben Becerra
Hays County Judge

Related Party Disclosure Form

Hays County strives to provide financial transparency to its taxpayers. Completion of this form will allow for added transparency into the procurement process by disclosing Vendor relationships with current or former Hays County employees. The existence of a relationship may not present a legal or ethical conflict for a Vendor. However, disclosure will allow for consideration of potential conflicts and/or ways to eliminate conflicts.

A Vendor who Employs any of the following is required to disclose the relationship on this form:

- Current Hays County employee (including elected or appointed official)(Complete Section A)
- Former Hays County employee who has been separated from Hays County for no less than four (4) years (including elected or appointed official) (Complete Section B)
- Person related within the 2nd degree of consanguinity or affinity to either of the above[1] (Complete Section C)

If no known relationships exist, complete Section D.

This form is required to be completed in full and submitted with the proposal package. A submitted proposal package that does not include this completed form will be considered non-responsive and will not be eligible for an award.

Section A: Current Hays County Employee

_____

Employee Name Title

Section B: Former Hays County Employee

_____

Employee Name Title Date of Separation from County

Section C: Person Related to Current or Former Hays County Employee

_____

Employee or Former Employee Name Title

_____

Name of Related Person Title Relationship

Section D: No Known Relationships

If no relationships in accordance with the above exist or are known to exist, provide a written explanation below:

_____

_____

_____

Attach additional pages if necessary.

I, the undersigned, hereby certify that the information provided is true and complete to the best of my knowledge.

CENTERLINE SUPPLY
Name of Vendor

Signature of Certifying Official

BRANCH MANAGER
Title of Certifying Official

JASON BARRETT
Printed Name of Certifying Official

07/14/2020
Date

(1)A degree of relationship is determined under Texas Government Code Chapter 573. (as outlined below)

Relationship of Consanguinity				
	1st Degree	**2nd Degree**	**3rd Degree***	**4th Degree***
Person	child or parent	grandchild, sister, brother or grand-parent	great-grandchild, niece, nephew, aunt,* uncle* or great-grandparent	great-great-grandchild, grandniece, grandnephew, first cousin, great aunt,* great uncle* or great-great-grandparent
* An aunt, uncle, great aunt or great uncle is related to a person by consanguinity only if he or she is the sibling of the person's parent or grandparent.				

Relationship of Affinity		
	1st Degree	**2nd Degree**
Person	spouse, mother-in-law, father-in-law, son-in-law, daughter-in-law, stepson, stepdaughter, stepmother or stepfather	brother-in-law, sister-in-law, spouse's grandparent, spouse's grandchild, grandchild's spouse or spouse of grandparent

“Vendor” shall mean any individuals or entity that seeks to enter into a contract with Hays County.

“Employs” shall mean any relationship wherein Vendor has made arrangements to compensate an individual, directly or by way of a business organization in which the individual has a sharehold or ownership interest, even if that arrangement is contractual and/or on an hourly-charge basis.

OFFICE OF THE COUNTY AUDITOR

Hays County Purchasing
712 S. Stagecoach Trail, Ste. 1071
San Marcos, Texas 78666
512-393-2273

Marisol Villarreal-Alonzo, CPA
County Auditor
marisol.alonzo@co.hays.tx.us

Vickie G. Dorsett
Assistant County Auditor
vickie.dorsett@co.hays.tx.us

June 16, 2020

PathMark Traffic Equipment, LLC
PO Box 1066
San Marcos, TX 78667

RE: Annual contract renewal

The annual contract for Regulatory Road Signs, IFB 2018-B07, is scheduled to expire on July 31, 2020. This letter will serve as official notice that Hays County would like to exercise its second (2nd) option to renew the existing contract for one (1) additional year effective August 1, 2020-July 31, 2021, provided all terms and conditions remain unchanged and in full force and effect as provided in the original bid. If you are in agreement with the renewal terms, please acknowledge below and return one original to the Hays County Purchasing Office at the address listed above.

Please email purchasing@co.hays.tx.us if you wish to make modifications to the contract or have any questions. Thank you.

Sincerely,

Marisol Villarreal-Alonzo, CPA
Hays County Auditor

Signature	Pathmark Traffic Equipment Company
Rick Bruschke Printed Name	6/16/2020 Date

Approved by the Hays County
Commissioners Court on: _____

Ruben Becerra
Hays County Judge

Related Party Disclosure Form

Hays County strives to provide financial transparency to its taxpayers. Completion of this form will allow for added transparency into the procurement process by disclosing Vendor relationships with current or former Hays County employees. The existence of a relationship may not present a legal or ethical conflict for a Vendor. However, disclosure will allow for consideration of potential conflicts and/or ways to eliminate conflicts.

A Vendor who Employs any of the following is required to disclose the relationship on this form:

- Current Hays County employee (including elected or appointed official)(Complete Section A)
- Former Hays County employee who has been separated from Hays County for no less than four (4) years (including elected or appointed official) (Complete Section B)
- Person related within the 2nd degree of consanguinity or affinity to either of the above[1] (Complete Section C)

If no known relationships exist, complete Section D.

This form is required to be completed in full and submitted with the proposal package. A submitted proposal package that does not include this completed form will be considered non-responsive and will not be eligible for an award.

Section A: Current Hays County Employee

NA — NA

Employee Name — Title

Section B: Former Hays County Employee

NA — NA

Employee Name — Title — Date of Separation from County

Section C: Person Related to Current or Former Hays County Employee

NA — NA

Employee or Former Employee Name — Title

NA — NA

Name of Related Person — Title — Relationship

Section D: No Known Relationships

If no relationships in accordance with the above exist or are known to exist, provide a written explanation below:

there are no known relationships

Attach additional pages if necessary.

I, the undersigned, hereby certify that the information provided is true and complete to the best of my knowledge.

Pathmark Traffic Equipment
Name of Vendor

Signature of Certifying Official

General manager
Title of Certifying Official

Rick Brushaber
Printed Name of Certifying Official

6-16-20
Date

[1]A degree of relationship is determined under Texas Government Code Chapter 573. (as outlined below)

Relationship of Consanguinity				
	1st Degree	**2nd Degree**	**3rd Degree***	**4th Degree***
Person	child or parent	grandchild, sister, brother or grand-parent	great-grandchild, niece, nephew, aunt,* uncle* or great-grandparent	great-great-grandchild, grandniece, grandnephew, first cousin, great aunt,* great uncle* or great-great-grandparent
* An aunt, uncle, great aunt or great uncle is related to a person by consanguinity only if he or she is the sibling of the person's parent or grandparent.				

Relationship of Affinity		
	1st Degree	**2nd Degree**
Person	spouse, mother-in-law, father-in-law, son-in-law, daughter-in-law, stepson, stepdaughter, stepmother or stepfather	brother-in-law, sister-in-law, spouse's grandparent, spouse's grandchild, grandchild's spouse or spouse of grandparent

"Vendor" shall mean any individuals or entity that seeks to enter into a contract with Hays County.

"Employs" shall mean any relationship wherein Vendor has made arrangements to compensate an individual, directly or by way of a business organization in which the individual has a sharehold or ownership interest, even if that arrangement is contractual and/or on an hourly-charge basis.

OFFICE OF THE COUNTY AUDITOR

Hays County Purchasing
712 S. Stagecoach Trail, Ste. 1071
San Marcos, Texas 78666
512-393-2273

Marisol Villarreal-Alonzo, CPA
County Auditor
marisol.alonzo@co.hays.tx.us

Vickie G. Dorsett
Assistant County Auditor
vickie.dorsett@co.hays.tx.us

June 16, 2020

Vulcan Inc.
PO Box 1850
Foley, AL 36536-1850

RE: Annual contract renewal

Hays County has received your request for price increases for the coming year. This letter will serve as official notice that Hays County would like to exercise its second (2nd) option to renew the existing contract for one (1) additional year effective August 1, 2020-July 31, 2021, provided all other terms and conditions remain unchanged and in full force and effect as provided in the original bid. If you are in agreement with the renewal terms, please acknowledge below and return one original to the Hays County Purchasing Office at the address listed above.

Please email purchasing@co.hays.tx.us if you wish to make modifications to the contract or have any questions. Thank you.

Sincerely,

Marisol Villarreal-Alonzo, CPA
Hays County Auditor

Signature	Vulcan Inc., dba Vulcan Signs Company
David B. Beviacqua Printed Name	6/17/2020 Date

Approved by the Hays County
Commissioners Court on: _____

Ruben Becerra
Hays County Judge

Related Party Disclosure Form

Hays County strives to provide financial transparency to its taxpayers. Completion of this form will allow for added transparency into the procurement process by disclosing Vendor relationships with current or former Hays County employees. The existence of a relationship may not present a legal or ethical conflict for a Vendor. However, disclosure will allow for consideration of potential conflicts and/or ways to eliminate conflicts.

A Vendor who Employs any of the following is required to disclose the relationship on this form:

- Current Hays County employee (including elected or appointed official)(Complete Section A)
- Former Hays County employee who has been separated from Hays County for no less than four (4) years (including elected or appointed official) (Complete Section B)
- Person related within the 2nd degree of consanguinity or affinity to either of the above[1] (Complete Section C)

If no known relationships exist, complete Section D.

This form is required to be completed in full and submitted with the proposal package. A submitted proposal package that does not include this completed form will be considered non-responsive and will not be eligible for an award.

Section A: Current Hays County Employee

Employee Name Title

Section B: Former Hays County Employee

Employee Name Title Date of Separation from County

Section C: Person Related to Current or Former Hays County Employee

Employee or Former Employee Name Title

Name of Related Person Title Relationship

Section D: No Known Relationships

If no relationships in accordance with the above exist or are known to exist, provide a written explanation below:
Vulcan Inc., dba Vulcan Signs has no known relationships with Hays Co, TX

Attach additional pages if necessary.

I, the undersigned, hereby certify that the information provided is true and complete to the best of my knowledge.

Vulcan Inc., dba Vulcan Signs
Name of Vendor

Signature of Certifying Official

General Manager
Title of Certifying Official

David B. Beviacqua
Printed Name of Certifying Official

6/17/2020
Date

(1)A degree of relationship is determined under Texas Government Code Chapter 573. (as outlined below)

Relationship of Consanguinity				
	1st Degree	**2nd Degree**	**3rd Degree***	**4th Degree***
Person	child or parent	grandchild, sister, brother or grand-parent	great-grandchild, niece, nephew, aunt,* uncle* or great-grandparent	great-great-grandchild, grandniece, grandnephew, first cousin, great aunt,* great uncle* or great-great-grandparent
* An aunt, uncle, great aunt or great uncle is related to a person by consanguinity only if he or she is the sibling of the person's parent or grandparent.				

Relationship of Affinity		
	1st Degree	**2nd Degree**
Person	spouse, mother-in-law, father-in-law, son-in-law, daughter-in-law, stepson, stepdaughter, stepmother or stepfather	brother-in-law, sister-in-law, spouse's grandparent, spouse's grandchild, grandchild's spouse or spouse of grandparent

"Vendor" shall mean any individuals or entity that seeks to enter into a contract with Hays County.

"Employs" shall mean any relationship wherein Vendor has made arrangements to compensate an individual, directly or by way of a business organization in which the individual has a sharehold or ownership interest, even if that arrangement is contractual and/or on an hourly-charge basis.

AGENDA ITEM REQUEST FORM

Hays County Commissioners Court

Tuesdays at 9:00 AM

Request forms are due in Microsoft Word Format via email by 2:00 p.m. on Wednesday.

AGENDA ITEM

Authorize the Transportation Department to purchase a new Dell Latitude laptop computer valued at $1,050.16 for the recently filled Planner position and amend the budget accordingly.

ITEM TYPE	MEETING DATE	AMOUNT REQUIRED
CONSENT	July 21, 2020	$1,050.16

LINE ITEM NUMBER

020-710-00.5712_400

AUDITOR USE ONLY

AUDITOR COMMENTS:

PURCHASING GUIDELINES FOLLOWED: YES **AUDITOR REVIEW:** MARISOL VILLARREAL-ALONZO

REQUESTED BY	SPONSOR	CO-SPONSOR
Jerry Borcherding	JONES	N/A

SUMMARY

The Transportation Department would like to purchase a new Dell Latitude 5400 laptop for our new Planner to be able to work both at the office and remotely, as well as access information from various data-collecting devices county-wide.

DIR-TSO-3763 Quote
Budget Amendment:
Decrease Materials .5351
Increase Computer Equipment Operating .5712_400

A quote for your consideration.

Based on your business needs, we put the following quote together to help with your purchase decision. Below is a detailed summary of the quote we've created to help you with your purchase decision.

To proceed with this quote, you may respond to this email, order online through your **Premier page**, or, if you do not have Premier, use this **Quote to Order**.

Quote No.	**3000064031857.1**	Sales Rep	Chris Minchew
Total	**$1,050.16**	Phone	(800) 456-3355, 6180234
Customer #	9657350	Email	Chris_Minchew@Dell.com
Quoted On	Jun. 29, 2020	**Billing To**	ACCOUNTS PAYABLE HAYS COUNTY - AUDITORS 712 S STAGECOACH TRL STE 1071 SAN MARCOS, TX 78666-6247
Expires by	Jul. 29, 2020		
Deal ID	17318888		

Message from your Sales Rep

Please contact your Dell sales representative if you have any questions or when you're ready to place an order. Thank you for shopping with Dell!

Regards,
Chris Minchew

Shipping Group

Shipping To	Shipping Method
MARVA PEARCE HAYS COUNTY - AUDITORS 712 S STAGECOACH TRL STE 1206 INFORMATIONTECH SAN MARCOS, TX 78666-6250 (512) 393-2273	Standard Delivery

Product	Unit Price	Qty	Subtotal
Dell Adapter - USB-C to HDMI/VGA/Ethernet/USB 3.0	**$48.00**	**1**	**$48.00**
Dell Latitude 5400	**$963.47**	**1**	**$963.47**
Targus Drifter Slipcase - Laptop carrying case - 15.6-inch - gray, black	**$38.69**	**1**	**$38.69**

Dell inc. U.S. only. Dell inc. is located at One Dell Way, Mail Stop 8129, Round Rock, TX 78682

Subtotal:	**$1,050.16**
Shipping:	**$0.00**
Non-Taxable Amount:	**$1,050.16**
Taxable Amount:	**$0.00**
Estimated Tax:	**$0.00**
Total:	**$1,050.16**

Special lease pricing may be available for qualified customers. Please contact your DFS Sales Representative for details.

Shipping Group Details

Shipping To	Shipping Method
MARVA PEARCE HAYS COUNTY - AUDITORS 712 S STAGECOACH TRL STE 1206 INFORMATIONTECH SAN MARCOS, TX 78666-6250 (512) 393-2273	Standard Delivery

		Qty	Subtotal
Dell Adapter - USB-C to HDMI/VGA/Ethernet/USB 3.0 Estimated delivery if purchased today: Jul. 07, 2020 Contract # C000000006841 Customer Agreement # DIR-TSO-3763	**$48.00**	**1**	**$48.00**

Description	SKU	Unit Price	Qty	Subtotal
Dell Adapter - USB-C to HDMI/VGA/Ethernet/USB 3.0	470-ABQN	-	1	-

		Qty	Subtotal
Dell Latitude 5400 Estimated delivery if purchased today: Jul. 27, 2020 Contract # C000000006841 Customer Agreement # DIR-TSO-3763	**$963.47**	**1**	**$963.47**

Description	SKU	Unit Price	Qty	Subtotal
Latitude 5400 BTX Base	210-ARXJ	-	1	-
I5-8365U Processor	379-BDLC	-	1	-
Win 10 Pro 64 English, French, Spanish	619-AHKN	-	1	-
No AutoPilot	340-CKSZ	-	1	-
Microsoft(R) Office 30 Days Trial	658-BCSB	-	1	-
Intel Core i5-8365U Processor with Integrated Intel UHD 620 Graphics	338-BRMF	-	1	-
Intel vPro Technology Enabled	631-ACBI	-	1	-
8GB, 1x8GB, DDR4 Non-ECC	370-AECX	-	1	-
M.2 256GB PCIe NVMe Class 35 Solid State Drive	400-BDXG	-	1	-
14" HD (1366 x 768) Anti-Glare Non-Touch, Camera & Mic, WLAN/WWAN Capable, Privacy Shutter	391-BEIO	-	1	-
Dual Pointing, Contacted SmartCard Reader, Displayport over Type-C	346-BFJQ	-	1	-
Dual Pointing US English Backlit Keyboard	583-BFKP	-	1	-
Driver for Intel® Dual Band Wireless AC 9560 (802.11ac) 2x2 + Bluetooth 5.0	555-BEUN	-	1	-
Intel Dual Band Wireless AC 9560 (802.11ac) 2x2, Bluetooth 5.0	555-BEDV	-	1	-
No Mobile Broadband Card	556-BBCD	-	1	-
4 Cell 68Whr ExpressCharge™ Capable Battery	451-BCIP	-	1	-
65W AC Adapter, 7.4mm Barrel	492-BBXF	-	1	-
No Anti-Virus Software	650-AAAM	-	1	-
OS-Windows Media Not Included	620-AALW	-	1	-
E5 US Power Cord	450-AAEJ	-	1	-
Latitude 5400 Quick Start Guide	340-CLYF	-	1	-

US Order	332-1286	-	1	-
SERI Guide (ENG/FR/Multi)	340-AGIK	-	1	-
Fixed Hardware Configuration	998-DNGJ	-	1	-
Regulatory Label, FCC	389-DPGZ	-	1	-
SupportAssist	525-BBCL	-	1	-
Dell(TM) Digital Delivery Cirrus Client	640-BBLW	-	1	-
Dell Client System Update (Updates latest Dell Recommended BIOS, Drivers, Firmware and Apps)	658-BBMR	-	1	-
Waves Maxx Audio	658-BBRB	-	1	-
Dell Developed Recovery Environment	658-BCUV	-	1	-
Dell Power Manager	658-BDVK	-	1	-
Dell Latitude 5400 SRV	658-BEGG	-	1	-
Direct Ship Info	340-AAPP	-	1	-
Smart Select MIN SHIP (DAO/BCC)	340-CMDY	-	1	-
8th Gen Intel Core i5 vPro processor label	389-CGJO	-	1	-
No Option Included	340-ACQQ	-	1	-
No Mouse	570-AADK	-	1	-
No Resource DVD / USB	430-XXYG	-	1	-
ENERGY STAR Qualified	387-BBNO	-	1	-
BTS/BTP Smart Selection Shipment (VS)	800-BBQH	-	1	-
EAN label	389-BKKL	-	1	-
No Removable CD/DVD Drive	429-AATO	-	1	-
Latitude 5400 bottom door	321-BEKW	-	1	-
Dell Limited Hardware Warranty Extended Year(s)	975-3461	-	1	-
Thank you choosing Dell ProSupport. For tech support, visit //support.dell.com/ProSupport	989-3449	-	1	-
Dell Limited Hardware Warranty	997-8317	-	1	-
ProSupport: 7x24 Technical Support, 3 Years	997-8344	-	1	-
ProSupport: Next Business Day Onsite, 1 Year	997-8349	-	1	-
ProSupport: Next Business Day Onsite, 2 Year Extended	997-8354	-	1	-

		Qty	Subtotal
Targus Drifter Slipcase - Laptop carrying case - 15.6-inch - gray, black	**$38.69**	**1**	**$38.69**

Estimated delivery if purchased today:
Jul. 13, 2020
Contract # C000000006841
Customer Agreement # DIR-TSO-3763

Description	SKU	Unit Price	Qty	Subtotal
Targus Drifter Slipcase - Laptop carrying case - 15.6-inch - gray, black	A8685380	-	1	-

Subtotal:	**$1,050.16**
Shipping:	**$0.00**
Estimated Tax:	**$0.00**
Total:	**$1,050.16**

Important Notes

Terms of Sale

This Quote will, if Customer issues a purchase order for the quoted items that is accepted by Supplier, constitute a contract between the entity issuing this Quote ("Supplier") and the entity to whom this Quote was issued ("Customer"). Unless otherwise stated herein, pricing is valid for thirty days from the date of this Quote. All product, pricing and other information is based on the latest information available and is subject to change. Supplier reserves the right to cancel this Quote and Customer purchase orders arising from pricing errors. Taxes and/or freight charges listed on this Quote are only estimates. The final amounts shall be stated on the relevant invoice. Additional freight charges will be applied if Customer requests expedited shipping. Please indicate any tax exemption status on your purchase order and send your tax exemption certificate to Tax_Department@dell.com or ARSalesTax@emc.com, as applicable.

Governing Terms: This Quote is subject to: (a) a separate written agreement between Customer or Customer's affiliate and Supplier or a Supplier´s affiliate to the extent that it expressly applies to the products and/or services in this Quote or, to the extent there is no such agreement, to the applicable set of Dell's Terms of Sale (available at www.dell.com/terms or www.dell.com/oemterms), or for cloud/as-a-Service offerings, the applicable cloud terms of service (identified on the Offer Specific Terms referenced below); and (b) the terms referenced herein (collectively, the "Governing Terms"). Different Governing Terms may apply to different products and services on this Quote. The Governing Terms apply to the exclusion of all terms and conditions incorporated in or referred to in any documentation submitted by Customer to Supplier.

Supplier Software Licenses and Services Descriptions : Customer's use of any Supplier software is subject to the license terms accompanying the software, or in the absence of accompanying terms, the applicable terms posted on www.Dell.com/eula. Descriptions and terms for Supplier-branded standard services are stated at www.dell.com/servicecontracts/global or for certain infrastructure products at www.dellemc.com/en-us/customer-services/product-warranty-and-service-descriptions.htm.

Offer-Specific, Third Party and Program Specific Terms: Customer's use of third-party software is subject to the license terms that accompany the software. Certain Supplier-branded and third-party products and services listed on this Quote are subject to additional, specific terms stated on www.dell.com/offeringspecificterms ("Offer Specific Terms").

In case of Resale only: Should Customer procure any products or services for resale, whether on standalone basis or as part of a solution, Customer shall include the applicable software license terms, services terms, and/or offer-specific terms in a written agreement with the end-user and provide written evidence of doing so upon receipt of request from Supplier.

In case of Financing only: If Customer intends to enter into a financing arrangement ("Financing Agreement") for the products and/or services on this Quote with Dell Financial Services LLC or other funding source pre-approved by Supplier ("FS"), Customer may issue its purchase order to Supplier or to FS. If issued to FS, Supplier will fulfill and invoice FS upon confirmation that: (a) FS intends to enter into a Financing Agreement with Customer for this order; and (b) FS agrees to procure these items from Supplier. Notwithstanding the Financing Agreement, Customer's use (and Customer's resale of and the end-user's use) of these items in the order is subject to the applicable governing agreement between Customer and Supplier, except that title shall transfer from Supplier to FS instead of to Customer. If FS notifies Supplier after shipment that Customer is no longer pursuing a Financing Agreement for these items, or if Customer fails to enter into such Financing Agreement within 120 days after shipment by Supplier, Customer shall promptly pay the Supplier invoice amounts directly to Supplier.

Customer represents that this transaction does not involve: (a) use of U.S. Government funds; (b) use by or resale to the U.S. Government; or (c) maintenance and support of the product(s) listed in this document within classified spaces. Customer further represents that this transaction does not require Supplier's compliance with any statute, regulation or information technology standard applicable to a U.S. Government procurement.

For certain products shipped to end users in California, a State Environmental Fee will be applied to Customer's invoice. Supplier encourages customers to dispose of electronic equipment properly.

Electronically linked terms and descriptions are available in hard copy upon request.

^Dell Business Credit (DBC):
OFFER VARIES BY CREDITWORTHINESS AS DETERMINED BY LENDER. Offered by WebBank to Small and Medium Business customers with approved credit. Taxes, shipping and other charges are extra and vary. Minimum monthly payments are the greater of $15 or 3% of account balance. Dell Business Credit is not offered to government or public entities, or business entities located and organized outside of the United States.

AGENDA ITEM REQUEST FORM

Hays County Commissioners Court
Tuesdays at 9:00 AM

Request forms are due in Microsoft Word Format via email by 2:00 p.m. on Wednesday.

AGENDA ITEM

Approve Utility Permits.

ITEM TYPE	MEETING DATE	AMOUNT REQUIRED
CONSENT	July 21, 2020	

LINE ITEM NUMBER

AUDITOR USE ONLY

AUDITOR COMMENTS:

PURCHASING GUIDELINES FOLLOWED: N/A **AUDITOR REVIEW:** N/A

REQUESTED BY	SPONSOR	CO-SPONSOR
Jerry Borcherding	BECERRA	N/A

SUMMARY

Permit #:	Road Name:	Utility Company:
TRN-2020-3604-UTL	Sawyer Ranch Rd.(overhead)	JC Communications(Fiber Optic)
TRN-2020-3605-UTL	Darden Hill Road(Trench)	BCGC-LOGO(Water)

Hays County Transportation Department
2171 Yarrington Rd, Suite 200, Kyle Texas 78640
(P) 512-393-7385 (Web) www.hayscountytx.com

UTILITY PERMIT APPROVAL LETTER

** Notification must be given **IN WRITING** at least 24 hours before work begins and proper traffic control must be implemented throughout the work zone. **

The utility company or any of its representatives, engineers, contractors, or authorized agents agree to use Best Management Practices to minimize erosion and sedimentation resulting from the proposed installation AND will insure that traffic control measures complying with applicable portions of the Texas Manual of Uniform Traffic Control Devices will be installed and maintained during installation.

General Special Provisions:

1. Construction of this line will begin on or after 7/17/2020 .

Utility Company Information:

Name: JC Communications
Address: TX
Phone: 5128014843
Contact Name: Mike Ragain

Engineer / Contractor Information:

Name: JC Communications
Address: TX
Phone: 5128014843
Contact Name: Mike Ragain

Hays County Information:

Utility Permit Number: TRN-2020-3604-UTL
Type of Utility Service: Will be installing Fiber Optic Cable on existing poles down Sawyer Ranch Road and Darden Hill Road and will be installing 12 new poles to keep an aerial connection.
Project Description:
Road Name(s): Sawyer Ranch Rd, Darden Hill Rd & Sawyer Ranch Rd, , , , , ,
Subdivision:
Commissioner Precinct:

What type of cut(s) will you be using ? ☐ Boring ☐ Trenching ☒ Overhead ☐ N/A

Authorization by Hays County Transportation Department
The above-mentioned permit was approved in Hays County Commissioners Court on 7/21/2020.

Signature	Title	Date
	Permit Coordinator	07/15/2020

Home Projects Work Orders Reports Administrator Help

> Home

Add New Message

Show Control Panel

Jurisdiction: Hays County

Project Type: Transportation

Project Number: TRN-2020-3604-UTL

Project | Requirements | Additional Fees | Payments

Permit Photos

Add — Add new photo to this project

Project Details

Project Number TRN-2020-3604-UTL [AUTO GENERATED]

Status: Pending (Under Review)

Designation: Utility (ROW-Overhead)

Project Name

Project Description

Project Type: Commercial

Physical Address or Location — Add Address

This address is **not** verified. Map it — Address Search

Address: Sawyer Ranch Rd

Unit / Apt / Suite

Place Name / City: Austin

State: TX

Zipcode: 78737

Description

Project Date & Time

Created: 07/15/2020 07:14:29 AM

Created By: Tyler J Pendergrass

Updated: 07/15/2020 07:29:59 AM

Updated By: Tyler J Pendergrass

Project Details

Utility Permit Paid

Qty: Qty: 1

Sq. Footage

Issued Date

Additional Information

Available Project Fees

Driveway (Active Jan. 1 2020)

- Driveway Permit
- Paper Processing Fee
- Utility Permit

Form Letters

The following letter are shown for Hays County

- Fee Invoice
- Transportation Receipt
- Utility Line Approval Letter

Permit Files

Plan Review Complete

Associated Files

Plan Review

TRN-2020-3604-UTL-DSISD.pdf 2.7 Mb

Uploaded: 07/06/20 02:06 PM by Daniel King on CP
Transfered from CP on 07/15/20 07:14 AM

Show in Customer Portal

Save

Add Contact

Delete Mode On Global Save

Manage Customer

Owner

Contact

Business Name: JC Communications

First Name: Mike | Last Name: Ragain | Suffix: - Select -

Details

Mailing Address

Address | City | State: TX | Zip

Web Site

Email: mike@jccom.net | Notify

Cell Phone: (512) 801-4843

Home Phone

Office Phone | ext

Notes

Copy this information to the section Copy

Applicant

Contact

Business Name: Plummer Associates, Inc

First Name: Daniel | Last Name: King | Suffix: - Select -

Details

Mailing Address

Address | City | State: - Select - | Zip

Web Site

Email: dking@plummer.com | Notify

Cell Phone

Home Phone: (512) 987-2165

Office Phone | ext

Notes

Copy this information to the section Copy

Contractor

Contact

Business Name

Work Orders (refresh)

Scheduled Date View | Category Grouped View

Create 3'rd Party Inspection

Facility Design Access

Add Access

Permit Relationships

Search

Project Number | Project Name

Save

Mike | Ragain | - Select -

Details

Mailing Address

Address | City | State | Zip

TX

Web Site

Email | Notify

mike@jccom.net

Cell Phone (512) 801-4843

Home Phone

Office Phone ext

Notes

Copy this information to the section Copy

Designated Contact

Go Top

Contact

Business Name

JC Communications

First Name | Last Name | Suffix

Mike | Ragain | - Select -

Details

Mailing Address

Address | City | State | Zip

TX

Web Site

Email | Notify

mike@jccom.net

Cell Phone (512) 801-4843

Home Phone

Office Phone ext

Notes

Copy this information to the section Copy

Utility Company

Go Top

Contact

Business Name

JC Communications

First Name | Last Name | Suffix

Mike | Ragain | - Select -

Details

Mailing Address

Address | City | State | Zip

TX

Save

Web Site

Email | Notify

mike@jccom.net ☐

Cell Phone (512) 801-4843 ☐

Home Phone ☐

Office Phone ext ☐

Notes

Copy this information to the section Copy

Project Information

Location Information | Utility Spec Info | Spec Information

Utility Line Information

Issued Date	7/21/2020
What is the type of line being installed?	Will be installing Fiber Optic Cable Overhead on ex
What type of cut(s) will you be using?	☐ Boring ☐ Trenching ☑ Overhead ☐ N/A
Will you be utilizing overhead installation?	Yes
What is the overall length of line being installed?	Approximately 10,000 feet
What is the proposed date on construction?	7/17/2020
- R.O.W. Location: County Road Name 1	Sawyer Ranch Rd
County Road Name 2	Darden Hill Rd & Sawyer Ranch Rd
County Road Name 3	
County Road Name 4	
County Road Name 5	
State Road Name 1	
State Road Name 2	
State Road Name 3	

Project Comments

Start New Thread

Type All Types

Search: Search Reset

Export to PDF

Date and Time Commented	Comment Type	Action Type	Commented By
07/15/20 07:15 AM	Private	Municipality	Tyler Pendergrass Reply

Save

Date and Time Commented	Comment Type	Action Type	Commented By

Customer Portal Application Note:
County Road Name 1: Sawyer Ranch Rd
County Road Name 2: Darden Hill Rd & Sawyer Ranch Rd
County Road Name 3 :
County Road Name 4:
County Road Name 5 :
State Road Name 1:
State Road Name 2:
State Road Name 3:
Commissioner Precinct: 1
Commissioner Name: ??
Located in City ETJ?: No
Project Description:

This build is to provide Fiber Optice cable for the Dripping Springs Independent School District. We are installing a new attachment on Existing Frontier & PEC poles. Two new poles will be places to continue the aerial connection.

Owner's / Applicant's Certification: I have carefully read the complete application and know all statements herein and in the attachments hereto are true and correct to the best of my knowledge.All paper applications & applications e-mailed to Hays County Transportation Department may be subject to a Paper Processing Fee. This Fee is noted on the Hays County Fee Schedule.If the proposed installation is a parallel installation, then the installation shall be located two (2) feet within the edge of the right-of-way, unless otherwise approved by Hays County.The line will be constructed and maintained on the road right-of-way as directed by the Hays County Road Department (HCRD), an agency of the Commissioners Court of Hays County, in accordance with governing laws, including but not limited to the "Federal Clean Water Act", the "Federal Endangered Species Act", and the "Federal Historic Preservation Act". Upon request by the HCRD, proof of compliance with all governing laws, rules, and regulations will be submitted to HCRD before commencement of construction.We agree to use Best Management Practices to minimize erosion and sedimentation resulting from the proposed installation and we will revegetate the project area as indicated under "General Special Provisions".We agree to ensure that traffic control measures complying with applicable portions of the Texas Manual of Uniform Traffic Control Devices will be installed and maintained during the installation.The location and description of the proposed line and appurtenances is more fully shown by (1) one complete sets of drawings attached to this application.It is expressly understood that Hays County does not purport, hereby, to grant any right, claim, title, or easement in or upon this road. It is further understood that Hays County may require the owner to relocate this line, subject to provisions of governing laws, by giving thirty (30) days written notice.It is understood and agreed that any damages sustained to the appurtenances installed under this proposal as a result of road construction and/or maintenance, including but not limited to mowing, ditch cleaning, culvert repair or replacement, roadway excavation and base work shall be the sole burden and expense of the owner.Applicant agrees to notify HCRD prior to commencement of any routine of periodic maintenance which requires pruning of trees within the road right-of-way. The County may provide specifications including but not limited to the extent and methods to govern in trimming, topping, tree balance, type of cuts, painting cuts, and clean up.The installation shall not damage any part of the road and adequate provisions must be made to cause minimum inconveniences to traffic and adjacent property owners. In the event the Applicant fails to comply with any or all the requirements as set forth herein, Hays County may take such as it deems appropriate to compel compliance.

Please Type Initials Here: DK

© SCPDC - All Rights Reserved 2020

Save

SHEET INDEX:

GENERAL
1. GENERAL PERMIT COVER

GENERAL NOTES
2. GENERAL NOTES

TYPICAL DETAILS AND TRENCH DETAILS
3. TYPICAL DETAILS

PLAN AND PROFILE
4. AERIAL UTILITY PLAN
5. AERIAL UTILITY PLAN
6. AERIAL UTILITY PLAN

TRAFFIC CONTROL PLAN AND DETAILS
7. TRAFFIC CONTROL DETAILS

Dripping Springs
INDEPENDENT SCHOOL DISTRICT

DSISD NEW ES #5
AERIAL IMPROVEMENTS
14451 SAWYER RANCH RD, AUSTIN, TX 78737

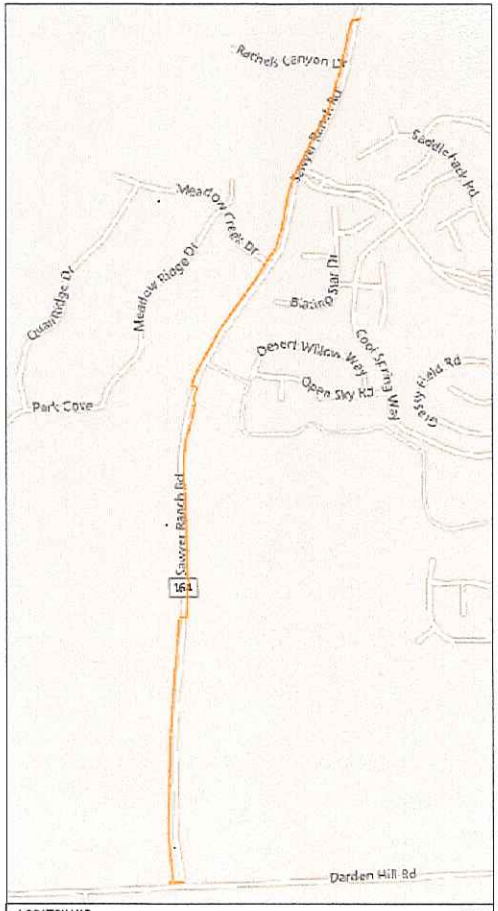

LOCATION MAP N.T.S.

N

PROJECT INFORMATION:

OWNER:
KEVIN HANEY
DRIPPING SPRINGS ISD

CONTACT:
ADAM HILL, P.E.
ALAN PLUMMER ASSOCIATES, INC.
6300 LA CALMA DRIVE, SUITE 400
AUSTIN, TX 78752

SUBMITTAL PREPARED BY:

PLUMMER

6300 LA CALMA, SUITE 400
AUSTIN, TEXAS 78752
(512) 452-5905
TBPE FIRM REGISTRATION NO. 13

CONTACT: ADAM HILL, P.E.

PHONE: (512) 452-5905

PRINTED: 7/1/2020 5:45 PM H:\Projects\186\006-01\Dripping Springs\4_Cad\acad\SHEETFILES\Aerial Exhibit - Dripping Springs.dwg SAVED: 7/1/2020 3:48 PM SAVED BY: Nparrish USER: Garcia, Nicholas

Hays County Transportation Department
2171 Yarrington Rd, Suite 200, Kyle Texas 78640
(P) 512-393-7385 (Web) www.hayscountytx.com

UTILITY PERMIT APPROVAL LETTER

** Notification must be given **IN WRITING** at least 24 hours before work begins and proper traffic control must be implemented throughout the work zone. **

The utility company or any of its representatives, engineers, contractors, or authorized agents agree to use Best Management Practices to minimize erosion and sedimentation resulting from the proposed installation AND will insure that traffic control measures complying with applicable portions of the Texas Manual of Uniform Traffic Control Devices will be installed and maintained during installation.

General Special Provisions:

1. Construction of this line will begin on or after 7/6/2020 .

Utility Company Information:

Name: BCGC-Logo
Address: 8706 Lockway San Antonio TX
Phone: 2103710951
Contact Name: Kyle Wahrmund

Engineer / Contractor Information:

Name: Bartlett Cocke
Address: 7901 East Riverside Drive. BLDG 2, Ste. 100 Austin TX 78744
Phone:
Contact Name:

Hays County Information:

Utility Permit Number: TRN-2020-3605-UTL
Type of Utility Service: will be doing Road and ROW Trenching to install a 12" Ductile Iron Water Line. Must have at least 48" of cover on the proposed 12" waterline to give us some ditch grading flexibility and still maintain 42" of cover in the ultimate build out of the roadway on Darden Hill Road.
Project Description:
Road Name(s): Darden Hill Road., , , , , , ,
Subdivision:
Commissioner Precinct:

What type of cut(s) will you be using ? ☐ Boring ☒ Trenching ☐ Overhead ☐ N/A

Authorization by Hays County Transportation Department

The above-mentioned permit was approved in Hays County Commissioners Court on 7/21/2020.

Permit Coordinator 07/15/2020

Hays County Transportation Department
2171 Yarrington Rd, Suite 200, Kyle Texas 78640
(P) 512-393-7385 (Web) www.hayscountytx.com

Signature	Title	Date

Home Projects Work Orders Reports Administrator Help

> Home

Add New Message

Show Control Panel

Jurisdiction: Hays County

Project Type: Transportation

Project Number: TRN-2020-3605-UTL

Project | Requirements | Additional Fees | Payments

Permit Photos

Add — Add new photo to this project

Project Details

Project Number TRN-2020-3605-UTL [AUTO GENERATED]

Status: Pending (Under Review)

Designation: Utility (ROW-Trench/Road Cut)

Project Name

Project Description

Project Type: Commercial

Physical Address or Location — Add Address

This address is **not** verified. Map it — Address Search

Address: 11091 Darden Hill Road

Unit / Apt / Suite

Place Name / City: Driftwood

State: TX

Zipcode: 78619

Description

Project Date & Time

Created: 07/15/2020 09:16:31 AM

Created By: Tyler J Pendergrass

Updated: 07/15/2020 09:21:26 AM

Updated By: Tyler J Pendergrass

Project Details

Utility Permit Paid

Qty: Qty: 1

Sq. Footage

Issued Date

Additional Information

Available Project Fees

Driveway (Active Jan. 1 2020)

- Driveway Permit
- Paper Processing Fee
- Utility Permit

Form Letters

The following letter are shown for Hays County

- Fee Invoice
- Transportation Receipt
- Utility Line Approval Letter

Permit Files

Plan Review Complete

Associated Files

Plan Review

TRN-2020-3605-UTL-Dripping Springs Elementary School No..

Uploaded: 06/30/20 08:16 AM by Cunningham Allen on CP
Transfered from CP on 07/15/20 09:16 AM

Show in Customer Portal

Save

Add Contact

Delete Mode: On Global Save

Owner

Contact

Business Name: Dripping Springs ISD

First Name: Clint | Last Name: Pruett | Suffix: - Select -

Details

Mailing Address

Address: 510 W. Mercer Street | City: Dripping Springs | State: TX | Zip: 78620

Web Site:

Email: clint.pruett@dsisdtx.gov | Notify ☐

Cell Phone: (512) 858-3032 ☐

Home Phone: ☐

Office Phone: (512) 852-3079 ext ☐

Notes:

Copy this information to the [ ] section Copy

Applicant

Contact

Business Name: Cunningham Allen

First Name: Cunningham | Last Name: Allen | Suffix: - Select -

Details

Mailing Address

Address: 3103 Bee Cave Road | City: Austin | State: TX | Zip: 78746

Web Site:

Email: cunninghamallenpermits@cunningham-allen.com | Notify ☐

Cell Phone: ☐

Home Phone: (512) 327-2946 ☐

Office Phone: ext ☐

Notes:

Copy this information to the [ ] section Copy

Contractor

Contact

Business Name:

TRN-2020-3605-UTL-Dripping Springs Elementary School No..

Uploaded: 06/30/20 08:16 AM by Cunningham Allen on CP
Transfered from CP on 07/15/20 09:16 AM

Show in Customer Portal

Manage Customer

Work Orders (refresh)

Scheduled Date View | Category Grouped View

Create 3'rd Party Inspection

Facility Design Access

Add Access

Permit Relationships

Search

Project Number | Project Name

Save

- Select -

Details

Mailing Address

Address	City	State	Zip
7901 East Riverside Drive. BLDG 2, Ste. 100	Austin	TX	78744

Web Site

Email | Notify

Cell Phone

Home Phone

Office Phone (512) 326-4223 ext

Notes

Copy this information to the section Copy

Designated Contact

Go Top

Contact

Business Name: Cunningham Allen, Inc.

First Name	Last Name	Suffix
Richard	Couch	- Select -

Details

Mailing Address

Address	City	State	Zip
3103 Bee Cave Rd #202	Austin	TX	78746

Web Site

Email: rcouch@cunningham-allen.com | Notify

Cell Phone

Home Phone

Office Phone (512) 327-2946 ext

Notes

Copy this information to the section Copy

Utility Company

Go Top

Contact

Business Name: BCGC-Logo

First Name	Last Name	Suffix
Kyle	Wahrmund	- Select -

Details

Mailing Address

Address	City	State	Zip
8706 Lockway	San Antonio	TX	78217

Save

Web Site

Email | Notify

kwahrmund@bartlettcocke.com

Cell Phone (210) 371-0951

Home Phone

Office Phone (210) 655-3127 ext

Notes

Copy this information to the section Copy

Project Information

Location Information | Utility Spec Info | Spec Information | Utility Line Information

Location Information Info Completed

Subdivision	
Phase	
Section	
Block	
Lot	
Legal Description	
Parcel ID	
Commissioner Precinct	4
Commissioner Name	Walt Smith
Issued Date	7/21/2020
IssuedAuth. Const.	☑
Expire Date	1/1/1900
Issued Expiration Notice	☑

Project Comments

Start New Thread

Type All Types

Search: Search Reset

Export to PDF

Date and Time Commented	Comment Type	Action Type	Commented By
07/15/20 09:17 AM	Private	Municipality	Tyler Pendergrass Reply

Save

Date and Time Commented	Comment Type	Action Type	Commented By

Customer Portal Application Note:
County Road Name 1: Darden Hill Road.
County Road Name 2:
County Road Name 3 :
County Road Name 4:
County Road Name 5 :
State Road Name 1:
State Road Name 2:
State Road Name 3:
Commissioner Precinct: 4
Commissioner Name: Walt Smith
Located in City ETJ?: Yes
City Name: Dripping Springs
Project Description:

Educational institute comprised of 5.0 acres of Lot 74 of the Onion Creek Ranch Subdivision as recorded in Vol. 8, Page 65 and 150.54 acre unplatted tract of land out of the Dripping Springs Fanny A.D. Darden Survey Abstract NO. 664, Document Number 2010026988 out of the Official Public Records of Hays County, Texas.

Owner's / Applicant's Certification: I have carefully read the complete application and know all statements herein and in the attachments hereto are true and correct to the best of my knowledge.All paper applications & applications e-mailed to Hays County Transportation Department may be subject to a Paper Processing Fee. This Fee is noted on the Hays County Fee Schedule.If the proposed installation is a parallel installation, then the installation shall be located two (2) feet within the edge of the right-of-way, unless otherwise approved by Hays County.The line will be constructed and maintained on the road right-of-way as directed by the Hays County Road Department (HCRD), an agency of the Commissioners Court of Hays County, in accordance with governing laws, including but not limited to the "Federal Clean Water Act", the "Federal Endangered Species Act", and the "Federal Historic Preservation Act". Upon request by the HCRD, proof of compliance with all governing laws, rules, and regulations will be submitted to HCRD before commencement of construction.We agree to use Best Management Practices to minimize erosion and sedimentation resulting from the proposed installation and we will revegetate the project area as indicated under "General Special Provisions".We agree to ensure that traffic control measures complying with applicable portions of the Texas Manual of Uniform Traffic Control Devices will be installed and maintained during the installation.The location and description of the proposed line and appurtenances is more fully shown by (1) one complete sets of drawings attached to this application.It is expressly understood that Hays County does not purport, hereby, to grant any right, claim, title, or easement in or upon this road. It is further understood that Hays County may require the owner to relocate this line, subject to provisions of governing laws, by giving thirty (30) days written notice.It is understood and agreed that any damages sustained to the appurtenances installed under this proposal as a result of road construction and/or maintenance, including but not limited to mowing, ditch cleaning, culvert repair or replacement, roadway excavation and base work shall be the sole burden and expense of the owner.Applicant agrees to notify HCRD prior to commencement of any routine of periodic maintenance which requires pruning of trees within the road right-of-way. The County may provide specifications including but not limited to the extent and methods to govern in trimming, topping, tree balance, type of cuts, painting cuts, and clean up.The installation shall not damage any part of the road and adequate provisions must be made to cause minimum inconveniences to traffic and adjacent property owners. In the event the Applicant fails to comply with any or all the requirements as set forth herein, Hays County may take such as it deems appropriate to compel compliance.

Please Type Initials Here: RC

© SCPDC - All Rights Reserved 2020

Save

DRIPPING SPRINGS ELEMENTARY SCHOOL NO. 5
11091 Darden Hill Road.
Location Map

NOT TO SCALE
N.T.S

LIST OF AFFECTED PROPERTY OWNERS		
PROPERTY ID	PROPERTY OWNER	PROPERTY ADDRESS
90760	Burba Sharon Louise and Deangelo John Thomas	11000 Darden Hills Road. Austin TX 78737
135216	Burba Sharon Louise and Deangelo John Thomas	11000 Darden Hills Road. Austin TX 78737
19841	Burba Edward T. and Burba Sharon L.	11000 Darden Hills Road. Austin TX 78737

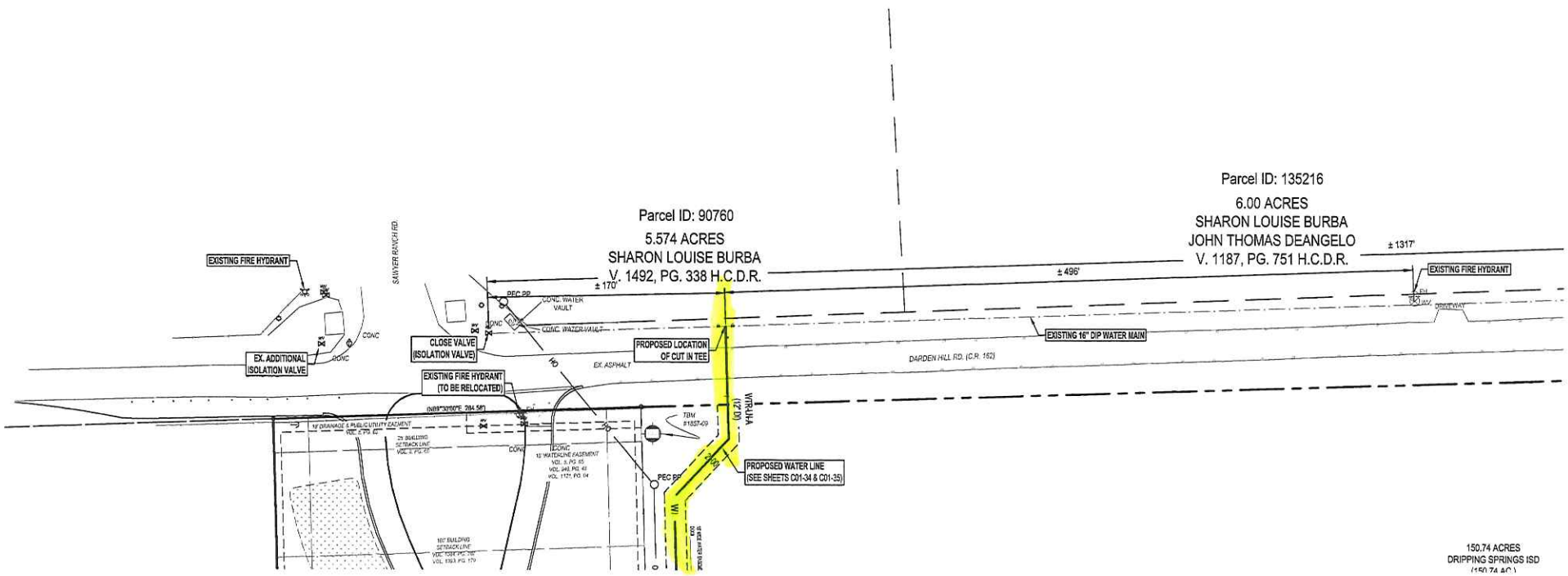

AGENDA ITEM REQUEST FORM

Hays County Commissioners Court
Tuesdays at 9:00 AM

Request forms are due in Microsoft Word Format via email by 2:00 p.m. on Wednesday.

AGENDA ITEM

Authorize the County Judge to execute a Second Amendment to City of Dripping Springs, County of Hays, Dripping Springs Independent School District, and Dripping Springs Library Board Agreement Regarding Extension and Clarification of the Cost Allocation and Reimbursement for the Dripping Springs Tax Increment Reinvestment Zone Number One and Tax Increment Reinvestment Zone Number Two.

ITEM TYPE	MEETING DATE	AMOUNT REQUIRED
CONSENT	July 21, 2020	N/A

LINE ITEM NUMBER

AUDITOR USE ONLY

AUDITOR COMMENTS:

PURCHASING GUIDELINES FOLLOWED: N/A **AUDITOR REVIEW:** N/A

REQUESTED BY	SPONSOR	CO-SPONSOR
	SMITH	N/A

SUMMARY

Modifications made to the Cost Allocation and Reimbursement Agreement do not affect Hays County's participation in the 2 Dripping Springs TIRZs. The modifications are being proposed to clarify what portions of the project(s) can be paid by and/or reimbursed to DSISD.

<u>Second Amendment</u> to City of Dripping Springs, County of Hays, Dripping Springs Independent School District, and Dripping Springs Library Board Agreement Regarding <u>Extension and Clarification of the</u> Cost Allocation and Reimbursement for the Dripping Springs Tax Increment Reinvestment Zone Number One and Tax Increment Reinvestment Zone Number Two

This Amendment to the Interlocal Agreement (the "Agreement"), by and between the **City of Dripping Springs,** a general law city in Hays County, Texas (hereinafter the "City"), **Hays County** (hereinafter the "County"), the **City of Dripping Springs Independent School District** (hereinafter the "District"), **Dripping Springs Community Library District** (the "Library"), and **Tax Increment Reinvestment Zone Number One** and **Tax Increment Reinvestment Zone Number Two, Dripping Springs, Texas** (the "TIRZs") (collectively the "Parties"), in connection with the development and construction of the Town Center Project.

RECITALS

WHEREAS, the Interlocal expires on December 31, 2020; and

WHEREAS, the original Interlocal Agreement provides for an extension in Section 2.1; and

WHEREAS, Section 2.2 of the Agreement that the Parties annually revisit and review this Agreement by July 1st of each year; and

WHEREAS, the Parties desire to continue with preparation and negotiation related to the TIRZ Projects; and

WHEREAS, the Parties desire to allow the Tax Increment Reinvestment Zone to continue its work on the Town Center Project; and

WHEREAS, current deposits into the Tax Increment Fund are insufficient to fund both the Town Center Project and reimburse the Parties for previous funding; and

WHEREAS, the Parties desire to use the Tax Increment Fund to fund the Town Center Project and delay the reimbursement to the parties.

NOW, THEREFORE, the City, County, District, Library, and TIRZ, in consideration of the terms, conditions, and covenants contained herein, hereby agree as follows:

A. Amendment to Article II:

ARTICLE II

TERM OF AGREEMENT

2.1 Term. The term of this Agreement ("Term") shall be until December 31, 2022. This Agreement may be extended for up to twenty years by Agreement of all Parties.

B. Amendment to Article IX:

ARTICLE IX

RIGHTS TO REIMBURSEMENT

9.6 Reimbursement for costs related to the Town Center Project shall begin no later than December 31, 2022. Each fiscal year between the execution of this amendment and December 31, 2022, the TIRZ Board shall review and recommend the amount, if any, of reimbursement to the Parties participating in the Town Center Project. All remaining reimbursement for Town Center Project expenditures by the Parties will be accomplished by December 31, 2022 unless the reimbursement date is extended by written agreement of all parties.

Reimbursement for all other project contributions, including Old Fitzhugh, Downtown Parking, and the Triangle, shall occur as contemplated in the original Cost Sharing and Reimbursement Agreement, as amended.

E. General Provisions.

All other provisions in the Interlocal Agreement approved on or about September 18, 2018 and amended on or about April 2019 shall remain unchanged unless specifically amended by this Amendment.

EXECUTED on this the _____ day of _____, 2020 ("Effective Date").

City of Dripping Springs, Texas

_____

Mayor

Attest:

_____

City Secretary

Hays County, Texas

_____

Attest:

_____

TIRZ Board

_____

Attest:

_____

Dripping Springs Independent School District

Ba

Member, Board of Trustees

Mary Jane Hetrick

Vice President, Board of Trustees

Dripping Springs Community Library District

_____

President

_____

Treasurer

Signature: Barbara Stroud
Barbara Stroud (Jul 8, 2020 09:37 CDT)

Email: barbara.stroud@dsisdtx.us

Signature: Mary Jane Hetrick
Mary Jane Hetrick (Jul 8, 2020 09:43 CDT)

Email: maryjane.hetrick@dsisdtx.us

AGENDA ITEM REQUEST FORM

Hays County Commissioners Court
Tuesdays at 9:00 AM

Request forms are due in Microsoft Word Format via email by 2:00 p.m. on Wednesday.

AGENDA ITEM

Approve the cancellation of Commissioners Court on August 4, 2020.

ITEM TYPE	MEETING DATE	AMOUNT REQUIRED
CONSENT	July 21, 2020	

LINE ITEM NUMBER

AUDITOR USE ONLY

AUDITOR COMMENTS:

PURCHASING GUIDELINES FOLLOWED: N/A **AUDITOR REVIEW:** N/A

REQUESTED BY	SPONSOR	CO-SPONSOR
	INGALSBE	N/A

SUMMARY

AGENDA ITEM REQUEST FORM

Hays County Commissioners Court
Tuesdays at 9:00 AM

Request forms are due in Microsoft Word Format via email by 2:00 p.m. on Wednesday.

AGENDA ITEM

Authorize the execution of the FY 2020 Grant Agreement with the U.S. Department of Justice, Drug Enforcement Administration for overtime reimbursements related to the Sheriff's Office Organized Crime Drug Enforcement Task Force (OCDETF) and amend the budget accordingly.

ITEM TYPE	MEETING DATE	AMOUNT REQUIRED
CONSENT	July 21, 2020	N/A

LINE ITEM NUMBER

001-618-99-069]

AUDITOR USE ONLY

AUDITOR COMMENTS:

PURCHASING GUIDELINES FOLLOWED: N/A **AUDITOR REVIEW:** MARISOL VILLARREAL-ALONZO

REQUESTED BY	SPONSOR	CO-SPONSOR
Sheriff Gary Cutler	INGALSBE	N/A

SUMMARY

The Sheriff's Office has received additional funding from the Drug Enforcement Administration to offset overtime costs for the detective assigned to the OCDETF Program, specifically Operation Roasted Gold. No county match is required.

Attachment: OCDETF SW-TXW-0935

Budget Amendment:
Increase Intergovernmental Revenue .4301 - ($3,000)
Increase Overtime Compensation .5302 - $3,000

ORGANIZED CRIME DRUG ENFORCEMENT TASK FORCES

FY 2020 Agreement

FOR THE USE OF THE STATE OR LOCAL OVERTIME AND AUTHORIZED EXPENSE/STRATEGIC INITIATIVE PROGRAM

DUNS #: 097494884

Federal Tax Identification #: 74-6002241

DC#: **W-32-**

Amount Requested:

Amount requested should match the amount calculated on the Initial Funding Form, Page 2.

$ 3,000.00

Number of Officers Listed: 1

OCDETF Investigation / Strategic Initiative Number: SW-TXW-0935

Operation Name: Roasted Gold

From: July 13, 2020
Beginning Date of Agreement

To: September 30, 2020
Ending Date of Agreement

Federal Agency Investigations: Number: M8-20-0025

State or Local Organization

Narcotics Supervisor: Lt Michael Briggs

Telephone Number: (512) 757-1497

E-mail Address: michael.briggs@co.hays.tx.us

State or Local Organization Name: Hays County Sheriff's Office

Address to receive OCDETF paperwork (no PO Boxes):

ATTN: Vickie Dorsett

1307 Uhland Road

San Marcos, Texas 78666

Sponsoring Federal Agency(ies): Drug Enforcement Administration (DEA)

Sponsoring Federal Agency Group/Squad Supervisor: GS Dwayne T. Crawley

Telephone Number: (512) 344-4900

E-mail Address: dwayne.t.crawley@usdoj.gov

Please provide the name, telephone number, e-mail address, and fax number for the **financial staff person at the State or Local Organization, who is directly responsible for the billing on the Reimbursement Request:**

Name: Vickie Dorsett

Telephone Number: (512) 393-2275

E-mail Address: vickie.dorsett@co.hays.tx.us

ORGANIZED CRIME DRUG ENFORCEMENT TASK FORCES

FY 2020 Agreement Initial Funding Form

FOR THE USE OF THE STATE OR LOCAL
OVERTIME AND AUTHORIZED EXPENSE/STRATEGIC INITIATIVE PROGRAM

OCDETF Case #: SW-TXW-0935

Amount Requested: $ 3,000.00

This amount should be entered on Page 1 of the Reimbursable Agreement.

Please note: The amount requested should cover your active investigation plan from the agreement start date. Proactive funding analysis will be conducted to determine the need for additional funds throughout the life of the agreement.

Agreement Activity: *(Please check all that apply)*

- [x] Surveillance
- [x] Takedown
- [ ] Trial/Court
- [x] Wire: [x] Approved [ ] Pending
- [ ] Other

If Other, please describe the type of investigative activity the State & Local Agency will be participating in:

Factors to Consider when Determining the Initial Agreement Amount:

Average Officer Overtime Rate:	Estimated overtime hours for your active investigation plan, from the agreement start date:	Prior year agreement spending, if any:
$ 56.29	71.00	$ 0.00

Please provide a brief explanation on how the initial funding amount was determined, if other factors were considered:

Hays County supplies investigative support and surveillance units for the wiretap investigations.

This Agreement is between the above named State or Local Law Enforcement Organization and the Organized Crime Drug Enforcement Task Forces (OCDETF) Program. This Agreement shall be effective when signed by an authorized State or Local Organization official, the sponsoring Federal Agency Special Agent-In-Charge, the sponsoring Agency Regional OCDETF Coordinator, the Assistant United States Attorney Regional OCDETF Director, and the OCDETF Executive Office.

1. It is agreed that the State or Local Law Enforcement officers named on this Agreement will assist in OCDETF Investigations, Strategic Initiatives and prosecutions as set forth in the Organized Crime Drug Enforcement Task Forces State or Local Overtime and Authorized Expense/Strategic Initiative Programs, Policies and Procedures Manual, Fiscal Year 2020.

2. No individual Agreement with a State or Local organization may exceed $25,000, and the cumulative amount of OCDETF State and Local overtime monies that may be expended on a single OCDETF Investigation or Strategic Initiative in a single fiscal year may not exceed $50,000 without express prior approval from the OCDETF Executive Office. The OCDETF Executive Office will entertain requests to exceed these funding levels in particular cases. Please submit a written request including justification approved by the AUSA Regional Director to the OCDETF Budget Officer/Deputy Budget Officer when seeking to exceed the above stated funding levels.

3. Each Reimbursable Agreement will be allowed no more than six (6) modifications per year. In addition, if the funds for a particular Agreement are completely deobligated with the intention of closing that Agreement, it will not count as a modification for purposes of this policy. These amendments must be transmitted by a memorandum approved and signed by the AUSA Regional OCDETF Director or designee for the region and sent to the OCDETF Executive Office.

4. If an Agreement does not have any activity during the last ninety (90) days, the funds shall automatically be deobligated. The OCDETF Executive Office will assist with the monitoring of the aging Agreements. Further, if a State or Local Organization indicates that it is no longer performing work under a particular Agreement, the State or Local Overtime and Authorized Expense/Strategic Initiative Programs, Policies and Procedures Manual requires that a modification memorandum identifying the amount to be deobligated be submitted to the OCDETF Executive Office as soon as possible after determining that no work is being performed.

5. The State or Local Law Enforcement Organization agrees to provide experienced drug Law Enforcement officers who are identified in this Agreement to work on the specified OCDETF Investigation or Strategic Initiative. Any change in Law Enforcement officers assigned must be agreed to by all approving officials.

6. Officers who are not deputized shall possess no Law Enforcement authority other than that conferred by virtue of their position as a commissioned officer of their parent Agency.

7. Officers who are deputized may possess Federal Law Enforcement authority as specified by the Agency affording the deputation.

8. Any State or Local officers assigned to an OCDETF Investigation or Strategic Initiative in accordance with this Agreement are not considered Federal employees and do not take on the benefits of Federal employment by virtue of their participation in the Investigation or Strategic Initiative.

9. OCDETF and the sponsoring Federal Law Enforcement Agency(ies) for the approved OCDETF Investigation or Strategic Initiative will provide to the assigned State or Local officers the clerical, operational and administrative support that is mutually agreed to by the parties in this Agreement.

10. Officers assigned to OCDETF Investigations or Strategic Initiatives should work full-time on the Investigation(s) or Strategic Initiative(s) in order to be paid overtime. In order to satisfy the "full-time" expectation, a Law Enforcement officer should work forty (40) hours per week or eight (8) hours per day on a single or multiple OCDETF Investigation(s) or Strategic Initiative(s). Any established exceptions or waivers to this definition shall be requested by the Regional Coordination Group and attached as Addendum A to the Agreement. [The parent State or Local Organization must pay the base salary of its officers. In the event officers must work overtime on an OCDETF Investigation or Strategic Initiative, the OCDETF Program will reimburse the parent State or Local Law Enforcement Organization for a limited amount of those overtime costs.] The Organization is responsible for paying its Law Enforcement officer(s) for their overtime, travel and per diem expenses. To ensure proper and complete utilization of OCDETF overtime and expense allocations, reimbursement claims must be submitted monthly on the OCDETF Reimbursement Request Form. The OCDETF Executive Office may refuse payment on any reimbursement request that is not submitted to the OCDETF Regional Coordination Group within thirty (30) days of the close of the month in which the overtime was worked.

11. It is the responsibility of the State or Local Organization to retain and have available for inspection sufficient supporting documentation for all regular hours and overtime hours worked towards a specific OCDETF case. Officers' timesheets must reflect work towards a specific OCDETF case and must be reviewed and signed by an authorized State or Local official.

12. Analysis of reimbursement claims by the Regional Coordination Group may result in a modification of the obligation of funds contained within this Agreement as well as the time period covered. The Organization affected by any such modification will receive a memo notifying them of the changes.

13. Overtime payments, including all other non-OCDETF Federal sources (such as Safe Streets, HIDTA, IRS, ICE, FEMA, etc.) may not, on an annual per person basis, exceed 25% of the current approved Federal salary rate in effect at the time the overtime is performed. The State or Local Organization is responsible for ensuring that this annual payment is not exceeded. The Executive Assistant/OCDETF Program Specialist will monitor these payments via MIS and communicate to the Federal Agency Regional OCDETF Coordinators who provide status updates to any officer approaching the threshold.

14. The overtime log must be attached to the reimbursement request when submitting the monthly invoices. The Sponsoring Federal Agency Supervisory Special Agent and the State or Local official authorized to approve the Reimbursement Request must certify that only authorized expenses are claimed, the regular hours requirement is satisfied, and that overtime has not exceeded 25% of the current Federal salary rate in effect at the time the overtime was worked.

15. Under no circumstances will the State or Local Organization charge any indirect costs for the administration or implementation of this Agreement.

16. The State or Local Organization shall maintain complete and accurate records and accounts of all obligations and expenditures of funds under this Agreement for a period of six (6) years and in accordance with generally accepted accounting principles to facilitate inspection and auditing of such records and accounts.

17. The State or Local Organization shall permit examination and auditing by representatives of the OCDETF Program, the sponsoring Federal Agency(ies), the U.S. Department of Justice, the Comptroller General of the United States, and/or any of their duly-authorized agents and representatives, of any and all records, documents, accounts, invoices, receipts, or expenditures relating to this Agreement. Failure to provide proper documentation will limit State or Local Law Enforcement Organizations from receiving OCDETF funding in the future.

18. The State or Local Organization will comply with Title VI of the Civil Rights Act of 1964 and all requirements applicable to OCDETF Agreements pursuant to the regulations of the Department of Justice (see, e.g., 28 C.F.R. Part 42, Subparts C and G; 28 C.F.R. 50.3 (1991)) relating to discrimination on the grounds of race, color, sex, age, national origin or handicap.

19. This Agreement may be terminated by any of the parties by written notice to the other parties ten (10) business days prior to termination. Billing for outstanding obligations shall be received by OCDETF within thirty (30) days of the notice of termination.

20. The Debt Collection Improvement Act of 1996 requires that most payments made by the Federal government, including vendor payments, must be made by electronic funds transfer (EFT). In accordance with the act, all OCDETF reimbursement payments will be issued via EFT. Participants are required to register in SAM.gov to receive reimbursements; registration information will be provided upon request. In certain circumstances the OCDETF Executive Office may make exceptions for Organizations that are unable to accept this form of payment, however, such Organizations must include written justification in the addendum of each new Agreement.

21. All changes made to the original Agreement must be approved by the OCDETF Executive Office and initialed by the Executive Assistant/OCDETF Program Specialist of the Regional Coordination Group making the revision. The AUSA Regional OCDETF Director or designee must initial all funding changes.

22. The Regional Coordination Group is responsible for identifying and implementing any additional policy requirements, as needed, for its specific region. Those regional policies will be documented in the Addendum B and attached to the approved Agreement. The Organizations are agreeing to adhere to these additional requirements and must have written approval by the Regional Coordination Group for any exceptions to the regional policies.

23. Restrictions: Fringe benefits (such as retirement, FICA, or other expenses) are NOT to be included in overtime payment. Auxiliary educational benefits are also NOT to be included in overtime payment. Reimbursement of overtime payment is based solely on the authorized overtime rate of each participating officer listed in the Agreement. Under no circumstances may a State or Local agency include any administrative fees for the processing of overtime. Additionally, officers are not eligible for reimbursement of compensation time earned in lieu of overtime payment. OCDETF will only reimburse an actual $ amount paid to the officer for overtime worked, any additional benefit (including compensation time) will NOT be reimbursed.

This Agreement is not a contract or obligation to commit Federal funds in the maximum amounts projected. Funding allocations for the time period set forth and agreed to herein represent projections only and are based upon consultation between the sponsoring Federal Agency and the State or Local Law Enforcement Organization. They are, therefore, subject to modification by OCDETF based upon the progress and needs of the OCDETF Investigation or Strategic Initiative. Additionally, resources are contingent upon the availability of funds per the approval and signature of the OCDETF Executive Office obligating authority. The OCDETF Executive Office will approve and certify that all the terms and conditions of the Agreement have been met.

Each Agreement must be approved and signed by a State or Local Law Enforcement Organization official who has supervisory authority over, and is authorized to assign, the participating Law Enforcement officers to the OCDETF Investigation or Strategic Initiative.

Approved By: _____

Authorized State or Local Official *Title* *Date*

_____

Print Name

Approved By: _____

Sponsoring Federal Agency Special Agent in Charge or Designee *Date*

_____

Print Name

Approved By: _____

Sponsoring Agency Regional OCDETF Coordinator *Date*

Approved By: _____

Assistant United States Attorney Regional OCDETF Director *Date*

Funds are encumbered for the State or Local Organization overtime costs and authorized expense/Strategic Initiative Programs specified above. **Subject to availability of funds**.

Approving Official: _____

OCDETF Executive Office *Date*

ORGANIZED CRIME DRUG ENFORCEMENT TASK FORCES

STATE OR LOCAL LAW ENFORCEMENT OFFICERS ASSIGNED TO PARTICIPATE IN THE STATE AND LOCAL OVERTIME AND AUTHORIZED EXPENSE/STRATEGIC INITIATIVE PROGRAMS

State or Local Organization: Hays County Sheriff's Office

OCDETF Investigation / Strategic Initiative Number: Roasted Gold / SW-TXW-0935

The Law Enforcement officers listed below will assist with the above identified OCDETF Investigation or Strategic Initiative. Any modification of the list of Law Enforcement officers must be agreed to in writing by all of the parties to this Agreement, made a part of the Agreement, and forwarded to the OCDETF Executive Office.

	NAME	TITLE/RANK	DOB
1.	Kelly Woodard	Detective	7/26/74
2.			
3.			
4.			
5.			
6.			
7.			
8.			
9.			
10.			

Addendum A

Definition of “Full-Time Participation” Exemption

The Southwest Region Coordination Group State and Local OVERTIME POLICY- DO NOT ALTER
For purposes of reimbursing OCDETF overtime claims, the following applies: 1)Work 40 hours per week on a single or multiple OCDETF investigations OR 2) If the officer/agent is not assigned full time to a task force working exclusively OCDETF investigations, then the officer/agent is required to work 8 hours regular time in a given day toward the OCDETF investigation before claiming any overtime; OR 3) To accommodate exigent unforeseen circumstances when effective management of dedicated resources cannot handle a particular enforcement action, overtime hours incurred may be reimbursed without the officer/agent having worked an 8 hour shift dedicated to the investigation, provided that the officer/agent is diverted from normal shift work to accommodate the need at the request of a supervisor of a federal agency. Reimbursement under such circumstances will be limited to the overtime incurred in response to the unforeseen exigent circumstances, that is, when the enforcement action is complete, no additional overtime will be reimbursed without compliance with 1 or 2 above. Under no circumstances will more than 24 overtime hours be reimbursed under this provision. The federal agency supervising the enforcement action should notify the appropriate Regional Coordinator of the enforcement action and overtime hours incurred by the State and Local Department(s) promptly. All approvals are subjected to the availability of funds.

Any Other Exceptions or Justifications

Exemptions will be considered on a case by case basis per individual incident. Any Other Any changes/additions must be submitted in writing and pre-approved by OCDETF Regional Coordinator.

Addendum B

Identification of Additional Policy Requirements

Southwest Region Policy -

TO STATE AND LOCAL OVERTIME AGREEMENT STRATEGIC INITIATIVE FUNDING REQUEST:

Note: The following ONLY pertains to Strategic Initiative Funding Requests

State and Local agencies acknowledge that all proposed expenditures requested under State and Local Overtime funds are conditioned upon the Southwest Regional Coordination Group (RCG) approval concurrent with any pre-approval process by the OCDETF Executive Office before funding is initiated.

Furthermore, the requesting State and Local agencies acknowledge that any approval process from the State and Local Overtime funds are considered reimbursable expenditures.

Any State and Local agency seeking Strategic Initiative Funding should initially contact the federal agency point of contact. The federal agency point of contact will coordinate further responses with the RCG.

AGENDA ITEM REQUEST FORM

Hays County Commissioners Court
Tuesdays at 9:00 AM

Request forms are due in Microsoft Word Format via email by 2:00 p.m. on Wednesday.

AGENDA ITEM

Accept the Fiscal Year 2019 Hays County Emergency Services District #7 Audit Report per Texas Health and Safety Code 775.082.

ITEM TYPE	MEETING DATE	AMOUNT REQUIRED
CONSENT	July 21, 2020	N/A

LINE ITEM NUMBER

AUDITOR USE ONLY

AUDITOR COMMENTS:

PURCHASING GUIDELINES FOLLOWED: N/A **AUDITOR REVIEW:** N/A

REQUESTED BY	SPONSOR	CO-SPONSOR
Marisol Villarreal-Alonzo	SHELL	N/A

SUMMARY

Texas Health and Safety Code 775.082 requires that the District prepare and file with the Commissioners Court by June 1 of each year an audit report of the district's fiscal accounts and records. . Please note that the COVID-19 pandemic caused interruptions and delays to the audit schedule. The District's Audit Report dated June 29, 2020 is attached.

LTG
LINDA TENEYUQUE GONZALEZ
Certified Public Accountant
Certified Fraud Examiner

June 29, 2020

To the Board of Commissioners
Hays County Emergency Services District #7

I have audited the financial statements of Hays County Emergency Services District #7, for the year ended September 30, 2019 and have issued my report thereon dated June 29, 2020. Professional standards require that I provide you with information about my responsibilities under generally accepted auditing standards, as well as certain information related to the planned scope and timing of the audit. I have communicated such information in my letter to you dated May 19, 2020. Professional standards also require that I communicate to you the following information related to my audit.

Compliance with all Ethics Requirements Regarding Independence
The auditor has complied with all relevant ethical requirements regarding independence.

Qualitative Aspects of Accounting Practices
Significant Accounting Estimates
Management is responsible for the selection and use of appropriate accounting policies. The significant accounting policies used by Hays County Emergency Services District #7, are described in Note A to the financial statements. No new accounting policies were adopted and the application of existing policies was not changed during 2019. I noted no transactions entered into by the organization during the year for which there is a lack of authoritative guidance or consensus. All significant transaction have been recognized in the financial statements in the proper period.

Accounting estimates are an integral part of the financial statements prepare by management and are based on management's knowledge and experience about past and current events and assumptions about future events. Certain accounting estimates are particularly sensitive because of their significance to the financial statements and because of the possibility that future events affecting them may differ significantly from those expected.

Difficulties Encountered in Performing the Audit
I encountered no significant difficulties in dealing with management in performing and completing my audit.

Corrected and Uncorrected Misstatements
Professional standards require me to accumulate all misstatements identified during the audit, other than those that are clearly trivial, and communicated them to the appropriate level of management. One correction to record certificate of deposit interest was prepared.

100 N Edward Gary Street, Suite 110, San Marcos Texas 78666

Disagreements with Management
For purposes of this letter, a disagreement with management is a financial accounting, reporting, or auditing matter, whether or not resolved to our satisfaction, that could be significant to the financial statements or the auditor's report. I am pleased to report that no such disagreement arose during the course of my audit.

Management Representations
I have requested certain representations from management that are included in the management representation letter dated June 29, 2020.

Management Consultations with Other Independent Accountants
In some cases, management may decide to consult with other accountants about auditing and accounting matters, similar to obtaining a "second opinion" on certain situations. If a consultation involves application of an accounting principle to the organization's financial statements or a determination of the type of auditor's opinion that may be expressed on those statements, my professional standards require the consulting accountant to check with me to determine that the consultant has all the relevant facts. To my knowledge, there were no such consultations with other accountants.

This report is intended solely for the information and use of organization's management and its governing board, and is not intended to be, and should not be, used by anyone other than these specified parties.

Very truly yours,

Linda Tenyque Gonzalez, CPA

Linda T. Gonzalez, CPA

HAYS COUNTY EMERGENCY SERVICES DISTRICT #7
AUDITED FINANCIAL STATEMENTS
FOR THE YEAR ENDED SEPTEMBER 30, 2019

LINDA TENEYUQUE GONZALEZ
Certified Public Accountant
Certified Fraud Examiner

Independent Auditor's Report

The Board of Commissioners
Hays County Emergency Services District #7

Report on the Financial Statements

I have audited the accompanying financial statements of Hays County Emergency Services District #7 (the District), which comprise the statement of assets, liabilities, and net assets-cash basis as of September 30, 2019, and the related statement of support, revenue, and expenses-cash basis for the year then ended, and the related notes to the financial statements.

Management's Responsibility for the Financial Statements

Management is responsible for the preparation and fair presentation of these financial statements in accordance with the cash basis of accounting described in Note A; this includes determining that the cash basis of accounting is an acceptable basis for the preparation of the financial statements in the circumstances. Management is also responsible for the design, implementation, and maintenance of internal control relevant to the preparation and fair presentation of financial statements that are free from material misstatement, whether due to fraud or error.

Auditor's Responsibility

My responsibility is to express an opinion on these financial statements based on my audit. I conducted my audit in accordance with auditing standards generally accepted in the United States of America. Those standards require that I plan and perform the audit to obtain reasonable assurance about whether the financial statements are free of material misstatement.

An audit involves performing procedures to obtain audit evidence about the amounts and disclosures in the financial statements. The procedures selected depend on the auditor's judgment, including the assessment of the risks of material misstatement of the financial statements, whether due to fraud or error. In making those risk assessments, the auditor considers internal control relevant to the entity's preparation and fair presentation of the financial statements in order to design audit procedures that are appropriate in the circumstances, but not for the purpose of expressing an opinion on the effectiveness of the entity's internal control. Accordingly, I express no such opinion. An audit also includes evaluating the appropriateness of accounting policies used and the reasonableness of significant accounting estimates made by management, as well as evaluating the overall presentation of the financial statements.

I believe that the audit evidence I have obtained is sufficient and appropriate to provide a basis for my audit opinion.

100 N. Edward Gary Street, Suite 110, San Marcos, Texas 78666

Opinion

In my opinion, the financial statements referred to above present fairly, in all material respects, the assets, liabilities, and net assets of Hay County Emergency Services District #7 as of September 30, 2019, and its support, revenue, and expenses for the year then ended in accordance with the cash basis of accounting described in Note A.

Basis of Accounting

I draw attention to Note A to the financial statements, which describes the basis of accounting. The financial statements are prepared on the cash basis of accounting, which is a basis of accounting other than accounting principles generally accepted in the United States of America. My opinion is not modified with respect to this matter.

Linda Tenyque Gorzyk, CPA

San Marcos, Texas
June 29, 2020

HAYS COUNTY EMERGENCY SERVICES DISTRICT #7

TABLE OF CONTENTS

INDEPENDENT AUDITOR'S REPORT.....1-2

FINANCIAL STATEMENTS

STATEMENT OF ASSETS, LIABILITIES, AND NET ASSETS-CASH BASIS....3

STATEMENT OF SUPPORT, REVENUE, AND EXPENSES-CASH BASIS.....4

NOTES TO FINANCIAL STATEMENTS.....5-6

HAYS COUNTY EMERGENCY SERVICES DISTRICT #7
STATEMENT OF ASSETS, LIABILITIES, AND NET ASSETS-CASH BASIS
SEPTEMBER 30, 2019

ASSETS

ASSETS		
Cash and cash equivalents	$	1,271,685
Investments		1,102,540
TOTAL ASSETS		2,374,225

LIABILITIES AND NET ASSETS

NET ASSETS		
Net assets-unrestricted		2,374,225
TOTAL NET ASSETS		2,374,225
TOTAL LIABILITIES AND NET ASSETS	$	2,374,225

The accompanying notes are an integral part of the financial statements.

HAYS COUNTY EMERGENCY SERVICES DISTRICT #7
STATEMENT OF SUPPORT, REVENUE, AND EXPENSES-CASH BASIS
YEAR ENDED SEPTEMBER 30, 2019

	Unrestricted
SUPPORT AND REVENUE	
Tax revenue	$ 1,586,854
Investment/interest income	19,196
Unrealized gain-investments	8,118
TOTAL SUPPORT AND REVENUE	1,614,168
EXPENSES	
WEMS contract payments	1,371,996
Appraisal District	10,076
Tax Assessor-Collector	2,191
Public notices	792
Insurance	1,564
Audit	2,800
Postage/mailbox	52
TOTAL EXPENSES	1,389,471
CHANGE IN NET ASSETS	224,697
NET ASSETS, BEGINNING OF YEAR	2,149,528
NET ASSETS, END OF YEAR	$ 2,374,225

The accompanying notes are an integral part of the financial statements.

HAYS COUNTY EMERGENCY SERVICES DISTRICT #7
NOTES TO FINANCIAL STATEMENTS
FOR THE YEAR ENDED SEPTEMBER 30, 2019

NOTE A – SUMMARY OF SIGNIFICANT ACCOUNTING POLICES

Reporting Entity: Hays County Emergency Services District #7 (the District), is a political subdivision established under the laws of the State of Texas by local voters for the purpose of raising money through ad valorem taxes on all real property located within the district. The District receives tax revenue to provide the direction and financial resources for protection of the lives and property of the people living or traveling within the District against medical emergencies.

Basis of Accounting: The District prepares its financial statement on the cash basis of accounting, which is a comprehensive basis of accounting other than generally accepted accounting principles. Consequently, revenue is recognized when received rather than when earned and expenses are recognized when paid rather than when the obligation is incurred.

NOTE B – CASH DEPOSITS

The District's cash deposits include checking and savings accounts. The District's deposits are held in one major financial institution and are exposed to concentrations of credit risk. The District has pledged securities for amounts in excess of FDIC coverage. As of September 30, 2019, the District's cash deposits totaled $1,271,685.

NOTE C – INVESTMENTS

Investments held by the District are measured and recorded at fair value based on quoted prices in active markets on a trade-date basis. Investments held by the District as of September 30, 2019, are as follows:

Fixed Income-Gov't Bonds	$	180,910
Certificates of deposits		830,406
Cash		91,224
Total investments	$	1,102,540

Net investment gains consisted of the following for the year ended September 30, 2019:

Dividend interest/capital gains	$	15,727
Unrealized gains		8,118
Total investment gains	$	23,845

Investment Policies
The District has adopted a written investment policy, as required by the Public Funds Investment Act, Chapter 2256, and Texas Government Code. The investments of the District are in compliance with their investment policies.

NOTE D – PROPERTY TAXES

The methods of property assessments and tax collections are determined by Texas statues. The appraisal of property within the District is the responsibility of the Hays County Appraisal District. Property taxes are levied by October 1 on the assessed value listed as of the prior January 1 for all real and business personal property located within the District in conformity with Texas Property Tax Code. Taxes are due on receipt of the tax bill and become delinquent if not paid before February 1st of the year in which imposed. The District's tax rate is set each September by the District's Board of Commissioners. The tax rate was $.062 over $100 of value.

NOTE E – SUBSEQUENT EVENTS

Subsequent events have been evaluated through June 29, 2020, which is the date the financial statements were available to be issued.

In October 2019 the District contributed $1,000,000 to the Wimberley Emergency Medical Service Systems, (WEMS) for the construction of their new facility.

In March 2020, the United States experienced a pandemic event-Covid-19. As a result, federal and local government agencies set social distancing and operation restrictions. The financial impact on the District due to Covid-19 is not known.

AGENDA ITEM REQUEST FORM

Hays County Commissioners Court
Tuesdays at 9:00 AM

Request forms are due in Microsoft Word Format via email by 2:00 p.m. on Wednesday.

AGENDA ITEM

Authorize the County Judge to execute the Third Addendum to a Chapter 381 Chapter Economic Development Incentive Agreement between Hays County and Humpty Dumpty SSM, Ltd. executed on or about July 21, 2015.

ITEM TYPE	MEETING DATE	AMOUNT REQUIRED
CONSENT	July 21, 2020	

LINE ITEM NUMBER

AUDITOR USE ONLY

AUDITOR COMMENTS:

PURCHASING GUIDELINES FOLLOWED: N/A **AUDITOR REVIEW:** N/A

REQUESTED BY	SPONSOR	CO-SPONSOR
	SMITH	N/A

SUMMARY

This Third Addendum changes the grant payment schedule by one year.

Attached: Third Addendum to Chapter 381 Economic Development Incentive Agreement

THIRD ADDENDUM TO CHAPTER 381 ECONOMIC DEVELOPMENT INCENTIVE AGREEMENT

THE STATE OF TEXAS §
§
COUNTY OF HAYS §

This Third Addendum to Consent and Development Agreement (this "Addendum") is entered into between the between Hays County, a political subdivision of the State of Texas (the "County"), and Humpty Dumpty SSM, Ltd. (the "Owner").

RECITALS

A. County and Owner entered into a Chapter 381 Economic Development Incentive Agreement dated effective as of July 21, 2015 (the "381 Agreement") related to the redevelopment of the Springtown Shopping Center ("Springtown") bounded by IH-35 North, Thorpe Lane and Springtown Way (the "Site") located within the County.

Therefore, for good and valuable consideration, the receipt and sufficiency of which are acknowledged, the Parties agree as follows:

1. **Ten Year Payment Period.** *Section 4.02* of the 381 Agreement is hereby amended to read as follows:

Beginning as soon as the calendar year 2016, but not later than calendar year ~~2021~~2022, Owner may apply for up to ten (10) consecutive annual Grant Payments. Upon application by Owner, County shall make such Grant Payments to Owner, in accordance with the following schedule:

Year	Additional Property Taxes %	Additional Sales Taxes %
1	100	90
2	100	90
3	80	80
4	80	80
5	60	60
6	60	60
7	40	40
8	40	40
9	20	20
10	20	20

As an example, if Year 1 is 2019, Owner could apply for and receive a Grant Payment in an amount equal to one hundred percent (100%) of the Additional Property Taxes and ninety percent (90%) of the Additional Sales Taxes generated on the Site in 2018, with subsequent Grant payments similarly being made according to the percentages above. With each

application for a Grant Payment, the Owner shall provide to the County a compliance certificate, as described in the 381 Agreement.

EXCEPT FOR THE ABOVE MODIFICATIONS, ALL OTHER TERMS AND CONDITIONS OF THE AGREEMENT SHALL REMAIN UNCHANGED, UNLESS PROPERLY MODIFIED BY SUBSEQUENT AMENDMENT UNDER THE TERMS OF THE AGREEMENT.

[SIGNATURES ON NEXT PAGE]

EXECUTED to be effective as of July 21, 2020.

HAYS COUNTY, TEXAS:

By: _____
Ruben Becerra
Hays County Judge

ATTEST: _____
Elaine Cardenas, MBA, PhD
Hays County Clerk

HUMPTY DUMPTY SSM, LTD.:
By: EGP Retail Management, L.L.C.,
its general partner

By: _____

Name: _____

Title: _____

ACKNOWLEDGMENT

THE STATE OF TEXAS §
§
COUNTY OF HAYS §

This instrument was acknowledged before me on the _____day of _____, 2020, by _____, _____of EGP Retail Management, L.L.C., general partner of Humpty Dumpty SSM, Ltd., in such capacity, on behalf of said entity.

_____
Notary Public, State of Texas

AGENDA ITEM REQUEST FORM

Hays County Commissioners Court
Tuesdays at 9:00 AM

Request forms are due in Microsoft Word Format via email by 2:00 p.m. on Wednesday.

AGENDA ITEM

Ratify the submission of a grant application to the Department of State Health Services (DSHS) for the Tuberculosis Prevention and Control - Federal Grant Program (TB/PC - Federal) in the amount of $26,757.00.

ITEM TYPE	MEETING DATE	AMOUNT REQUIRED
CONSENT	July 21, 2020	$4,460

LINE ITEM NUMBER

AUDITOR USE ONLY

AUDITOR COMMENTS:

PURCHASING GUIDELINES FOLLOWED: N/A **AUDITOR REVIEW:** N/A

REQUESTED BY	SPONSOR	CO-SPONSOR
T. CRUMLEY	INGALSBE	N/A

SUMMARY

This grant funding if for the identification and treatment if those persons with, or exposed to, tuberculosis (TB). The Hays County Health Department has participated in this program for several years, providing services to those affected by this disease. The available federal funding for the TB program is $22,297, with a 20% match of $4,460 required of the County for participation in the program. The match will be budgeted within the Health Department for fiscal year 2021 from existing personnel, fringe, and contractual services line items. If awarded, the contract period is expected to be from January 1, 2021 through December 30, 2021. The application was submitted electronically to DSHS on July 15, 2020.

Attachments:
- FY21 Inter-Local Grant Application
- Budget Template

Inter-Local Application for Tuberculosis Prevention and Control for FY 2021 Federal Funds

http://www.dshs.state.tx.us/idcu/disease/tb

TB Services Branch
201 West Howard Lane
Austin, Texas 78753

TABLE OF CONTENTS

FORM A: FACE PAGE – RESPONDENT INFORMATION……..…….. Error! Bookmark not defined.

FORM A: FACE PAGE - INSTRUCTIONS……5

FORM B: APPLICATION TABLE OF CONTENTS AND CHECKLIST……6

FORM C: CONTACT PERSON INFORMATION…… ……..……7

FORM D: ADMINISTRATIVE INFORMATION……...8-9

FORM E: ORGANIZATION, RESOURCES AND CAPACITY……..10-11

FORM F: PERFORMANCE MEASURES ……..……...12

FORM G: BUDGET SUMMARY FORM (Budget Attached) …….....13

FORM F: BUDGET CATEGORY DETAILS (Budget Attached)……14

Department of State Health Services
Form A Face Page

RESPONDENT INFORMATION

1) LEGAL BUSINESS NAME: Hays County Health Department

2) MAILING Address Information (include mailing address, street, city, county, state and 9-digit zip code): Check if address change ☑

712 S. Stagecoach Trail, Ste. 1045 San Marcos, TX 78666

3) PAYEE Name and Mailing Address, including 9-digit zip code (if different from above): Check if address change ☐

Hays County Treasurer
712 S. Stagecoach Trail, Ste. 1094
San Marcos, TX 78666

4) DUNS Number (9-digit) required if receiving federal funds: 09-7494884

5) Federal Tax ID No. (9-digit), State of Texas Comptroller Vendor ID Number (14-digit) or Social Security Number (9-digit):

Comptroller ID #17460022415002
Federal Tax ID #74-6002241

**The respondent acknowledges, understands and agrees that the respondent's choice to use a social security number as the vendor identification number for the contract, may result in the social security number being made public via state open records requests.*

6) TYPE OF ENTITY (check all that apply):

- ☐ City
- ☑ County
- ☐ Other Political Subdivision
- ☐ State Agency
- ☐ Indian Tribe
- ☐ Nonprofit Organization*
- ☐ For Profit Organization*
- ☐ HUB Certified
- ☐ Community-Based Organization
- ☐ Minority Organization
- ☐ Faith Based (Nonprofit Org)
- ☐ Individual
- ☐ Federally Qualified Health Centers
- ☐ State Controlled Institution of Higher Learning
- ☐ Hospital
- ☐ Private
- ☐ Other (specify): _____

**If incorporated, provide 10-digit charter number assigned by Secretary of State:*

7) PROPOSED BUDGET PERIOD: Start Date: January 1, 2021 End Date: December 31, 2021

8) COUNTIES SERVED BY PROJECT:

Hays County

9) AMOUNT OF FUNDING REQUESTED: $22,297.00

10) PROJECTED EXPENDITURES

Does respondent's projected federal expenditures exceed $500,000, or its projected state expenditures exceed $500,000, for respondent's current fiscal year (excluding amount requested in line 9 above)? **

Yes ☑ No ☐

***Projected expenditures should include anticipated expenditures under all federal grants including "pass through" federal funds from all state agencies, or all anticipated expenditures under state grants, as applicable.*

11) PROJECT CONTACT PERSON

Name: Tammy Crumley
Phone: 512-878-6673
Fax: N/A
Email: Tammy.crumley@co.hays.tx.us

12) FINANCIAL OFFICER

Name: Marisol Villareal-Alonzo
Phone: 512-393-2283
Fax: N/A
Email: Marisol.alonzo@co.hays.tx.us

The facts affirmed by me in this proposal are truthful and I warrant the respondent is in compliance with the assurances and certifications contained in APPENDIX B: DSHS Assurances and Certifications. I understand the truthfulness of the facts affirmed herein and the continuing compliance with these requirements are conditions precedent to the award of a contract. This document has been duly authorized by the governing body of the respondent and I (the person signing below) am authorized to represent the respondent.

13) AUTHORIZED REPRESENTATIVE Check if change ☐

Name: Ruben Becerra
Title: Hays County Judge
Phone: 512-393-2205
Fax: N/A
Email: Judge.becerra@co.hays.tx.us

14) DATE

15) SIGNATURE OF AUTHORIZED REPRESENTATIVE

DOCUSIGN SIGNATURE INFORMATION	
16) DOCUSIGN - SIGNATURE AUTHORITY Name: Judge Ruben Becerra Email Address: judge.becerra@co.hays.tx.us Documents to Sign: Signature Page ☑	17) DOCUSIGN - SECONDARY SIGNATURE AUTHORITY Name: Tammy Crumley Email Address: tammy.crumley@co.hays.tx.us (this email address must be different from the Signature Authority email address) Documents to Sign: Signature Page ☐
	If by default there will be a secondary signature authority to sign specific forms of this contract (Example: Secondary Signature Authority will FFATA Form and Lobbying Forms), please list the documents the Secondary Signature Authority will sign in the Special Instructions space below. If the Special Instructions section is completed below, the contract will be routed to the Secondary Signature Authority, after the Signature Page is signed by the Signature Authourity. Special Instructions: Secondary Authority will complete the FFATA Form and the Signature Authority will sign the contract. Please provide full contract to all the parties.

FORM A: FACE PAGE INSTRUCTIONS

This form provides basic information about the respondent and the proposed project with the Department of State Health Services (DSHS), including the signature of the authorized representative. It is the cover page of the proposal and is required to be completed. Signature affirms the facts contained in the respondent's response are truthful and the respondent is in compliance with the assurances and certifications contained in APPENDIX B: DSHS Assurances and Certifications and acknowledges that continued compliance is a condition for the award of a contract. Please follow the instructions below to complete the face page form and return with the respondent's proposal.

1) LEGAL BUSINESS NAME - Enter the legal name of the respondent.

2) MAILING ADDRESS INFORMATION - Enter the respondent's complete physical address and mailing address, city, county, state, and 9-digit zip code.

3) PAYEE NAME AND MAILING ADDRESS - Payee – Entity involved in a contractual relationship with respondent to receive payment for services rendered by respondent and to maintain the accounting records for the contract; i.e., fiscal agent. Enter the PAYEE's name and mailing address, including 9-digit zip code, if PAYEE is different from the respondent. The PAYEE is the corporation, entity or vendor who will be receiving payments.

4) DUNS Number – 9- digit Dun and Bradstreet Data Universal Numbering System (DUNS) number. . This number is required if receiving ANY federal funds and can be obtained at: http://fedgov.dnb.com/webform

5) FEDERAL TAX ID or STATE OF TEXAS COMPTROLLER VENDOR ID NUMBER OR SOCIAL SECURITY NUMBER - Enter the Federal Tax Identification Number (9-digit) or the Texas Vendor Identification Number assigned by the Texas State Comptroller (14-digit). *The respondent acknowledges, understands and agrees the respondent's choice to use a social security number as its vendor identification number for the contract, may result in the social security number being made public via state open records requests.

6) TYPE OF ENTITY - Check the type of entity as defined by the Secretary of State at http://www.sos.state.tx.us/corp/businessstructure.shtml and/or the Texas State Comptroller at https://fmx.cpa.state.tx.us/fmx/pubs/tins/tinsguide/2009-04/TINS_Guide_0409.pdf and check all other boxes that describe the entity.

   Historically Underutilized Business: A minority or women-owned business as defined by Texas Government Code, Title 10, Subtitle D, Chapter 2161. (http://www.window.state.tx.us/procurement/prog/hub/)
   State Agency: an agency of the State of Texas as defined in Texas Government Code §2056.001.ii
   Institutions of higher education as defined by §61.003 of the Education Code.
   MINORITY ORGANIZATION is defined as an organization in which the Board of Directors is made up of 50% racial or ethnic minority members.
   If a Non-Profit Corporation or For-Profit Corporation, provide the 10-digit charter number assigned by the Secretary of State.

7) PROPOSED BUDGET PERIOD - Enter the budget period for this proposal. Budget period is defined in the RFP.

8) COUNTIES SERVED BY PROJECT - Enter the proposed counties served by the project.

9) AMOUNT OF FUNDING REQUESTED - Enter the amount of funding requested from DSHS for proposed project activities (not including possible renewals). This amount must match column (1) row K from the BUDGET SUMMARY used for cost reimbursement budgets.

10) PROJECTED EXPENDITURES - If respondent's projected federal expenditures exceed $500,000 or its projected state expenditures exceed $500,000 for respondent's current fiscal year, respondent must arrange for a financial compliance audit (Single Audit).

11) PROJECT CONTACT PERSON - Enter the name, phone, fax, and email address of the person responsible for the proposed project.

12) FINANCIAL OFFICER - Enter the name, phone, fax, and email address of the person responsible for the financial aspects of the proposed project.

13) AUTHORIZED REPRESENTATIVE - Enter the name, title, phone, fax, and email address of the person authorized to represent the respondent. Check the "Check if change" box if the authorized representative is different from previous submission to DSHS.

14) SIGNATURE OF AUTHORIZED REPRESENTATIVE - The person authorized to represent the respondent must sign in this blank.

15) DATE - Enter the date the authorized representative signed this form.

16) DOCUSIGN SIGNATURE AUTHORITY – Enter the name, email address, and list the contract documents of the person authorized to sign the contract via DocuSign.

17) DOCUSIGN SECONDARY SIGNATURE AUTHORITY –If a Secondary Signature Authority exists, enter the name, email address, and list the contract documents of the person authorized to sign via DocuSign. Please ensure the email address listed for the Secondary Signature Authority in Box #17 is different from the email address for the Signature Authority in Box # 16. Please provide Special Instructions if a Secondary Signature Authority is to sign the FFATA, Lobbying Form, or any other forms other than the Signature Page.

FORM B: APPLICATION TABLE OF CONTENTS AND CHECKLIST

Legal Business Name of Respondent: Hays County Health Department

This form is provided as your Table of Contents and to ensure that the application is complete, proper signatures are included, and the required attachments have been submitted. Be sure to indicate page number.

FORM	DESCRIPTION	Included
A	Face Page - completed, and proper signatures and date included	X
B	Application Table of Contents and Checklist - completed and included	X
C	Contact Person Information - completed and included	X
D	Administrative Information – completed and included	X
E	Organization, Resources and Capacity included	X
F	Performance Measures	X
G	Budget Summary Form - completed and included (with most recently approved indirect cost agreement and letters of good standing if applicable)	X
H	Budget Category Detail Forms - completed and included	X

FORM C: CONTACT PERSON INFORMATION

Legal Business Name of Contractor: Hays County Health Department

This form provides information about the appropriate contacts in the contractor's organization in addition to those on FORM A: FACE PAGE. If any of the following information changes during the term of the contract, please send written notification to the ***Contract Management Section.***

Emergency Contact:	Tammy Crumley	Mailing Address	
Title:	Director of Countywide Operations	Street:	712 S. Stagecoach Trail, Ste 1045
Phone:	512-878-6673 Ext:	City:	San Marcos
Fax:		County:	Hays
Email:	Tammy.crumley@co.hays.tx.us	State, Zip:	Texas, 78666
Contact:	Margie Rodriguez	Street:	401-A Broadway Dr.
Title:	Clinic Manager	City:	San Marcos
Phone:	512-393-5535	County:	Hays
Fax:		State, Zip:	Texas, 78666
Email:	margie@co.hays.tx.us		
Contact:	Amy Fraga	Street:	712 S. Stagecoach Trail, Ste 1071
Title:	Financial Analyst II	City:	San Marcos
Phone:	512-393-2273	County:	Hays
Fax:		State, Zip:	Texas, 78666
Email:	Amy.fraga@co.hays.tx.us		
Contact:	Lisa Griffin	Street:	712 S. Stagecoach Trail, Ste 1045
Title:	Budget and Operations Manager	City:	San Marcos
Phone:	512-749-1155	County:	Hays
Fax:		State, Zip	Texas, 78666
Email:	Lisa.griffin@co.hays.tx.us		
Contact:	Efren Chavez Jr.	Street:	712 S. Stagecoach Trail, Ste 1045
Title:	Grant Writer	City:	San Marcos
Phone:	512-749-1161 Ext:	County:	Hays
Fax:		State, Zip	Texas, 78666
Email:	Efren.chavez@co.hays.tx.us		

FORM D: ADMINISTRATIVE INFORMATION - ILA

This form provides information regarding identification and contract history on the applicant, executive management, project management, governing board members, and/or principal officers. Respond to each request for information ***or provide the required supplemental document behind this form.*** *If responses require multiple pages, identify the supporting pages/documentation with the applicable request.*

Legal Name of Applicant: Hays County Health Department

Identifying Information

The applicant shall complete the following information:

- Names (last, first, middle) and addresses for the officials who are authorized to enter into a contract on behalf of the applicant.

Last Name:	Becerra	Mailing Address (incl. street, city, county, state, & zip):
First Name:	Ruben	111 E. San Antonio St., Ste. 300
Middle Name:		San Marcos, TX 78666
Last Name:	Crumley	Mailing Address (incl. street, city, county, state, & zip):
First Name:	Tammy	712 S. Stagecoach Trail, Ste. 1045
Middle Name:		San Marcos, TX 78666

Conflict of Interest and Contract History

The applicant shall disclose any existing or potential conflict of interest relative to the performance of the requirements of this Application for Funding. Examples of potential conflicts may include an existing business or personal relationship between the applicant, its principal, or any affiliate or subcontractor, with DSHS, the participating agencies, or any other entity or person involved in any way in any project that is the subject of this Application for Funding. Similarly, any personal or business relationship between the applicant, the principals, or any affiliate or subcontractor, with any employee of DSHS, a participating agency, or their respective suppliers, must be disclosed. Any such relationship that might be perceived or represented as a conflict shall be disclosed. Failure to disclose any such relationship may be cause for contract termination or disqualification of the proposal. If, following a review of this information, it is determined by DSHS that a conflict of interest exists, the applicant may be disqualified from further consideration for the award of a contract.

1. **Does anyone in the applicant organization have an existing or potential conflict of interest relative to the performance of the requirements of this Application for Funding?**

   ☐ **YES** **NO** ☑

   If YES, detail any such relationship(s) that might be perceived or represented as a conflict. (Attach no more than one additional page.)

2. **Has any member of applicant's executive management, project management, governing board or principal officers been employed by the State of Texas 24 months prior to the application due date?**

   ☐ **YES** **NO** ☑

   If YES, indicate his/her name, social security number, job title, agency employed by, separation date, and reason for separation.

3. Has applicant had a contract with DSHS within the past 24 months?

☑ **YES** ☐ **NO**

If YES, indicate the contract number(s):

Contract Number(s)	
Contract Number	Grant
HSS000104800001	Immunization
537-18-0153-00001	Hazards
53718-0249-00001	IDCU
537-18-0059-00001	Immunizations
537-18-0223-00001	RLSS
HHS000036000010	TB Federal
537-18-0037-00001	TB State
2016-001286-02	Hazards
HHS000371500030	Hurricane Recovery Crisis CoAg

If NO, applicant must be able to demonstrate fiscal solvency. Submit a copy of the organization's most recently audited balance sheet, statement of income and expenses and accompanying financial footnotes DSHS will evaluate the documents that are submitted and may, at its sole discretion, reject the proposal on the grounds of the applicant's financial capability.

4. Is applicant or any member of applicant's executive management, project management, board members or principal officers:

- Delinquent on any state, federal or other debt;
- Affiliated with an organization which is delinquent on any state, federal or other debt; or
- In default on an agreed repayment schedule with any funding organization?

☐ **YES** **NO** ☑

If YES, please explain. (Attach no more than one additional page.)

FORM E: ORGANIZATION, RESOURCES AND CAPACITY

(Organizational Chart)

FORM F: PERFORMANCE MEASURES

In the event a contract is awarded, applicant agrees that performance measures will be used to assess, in part, the applicant's effectiveness in providing the services described.

It is not necessary to list the performance measures below. Please refer to the work plan located at the following web link: http://www.dshs.texas.gov/idcu/disease/tb/policies/ where the performance measures may be found.

Contractor shall maintain documentation used to calculate performance measures as required by General Provisions Article VIII "Records Retention" and by Texas Administrative Code Title 22, Part 9 Chapter 165, §165.1 regarding retention of medical records.

All reporting to DSHS shall be completed as described in Section I, "D. Reporting" and submitted by the deadlines given.

If Contractor fails to meet any of the performance measures, Contractor shall furnish in the Narrative Report, **due April 1, 2021** a written narrative explaining the barriers and the plan to address those barriers. This requirement does not excuse any violation of this Contract, nor does it limit DSHS as to any options available under the contract regarding breach.

FY2021

TB/PC FEDERAL

Applicant Information

Legal Name of Applicant Agency: Hays County Health Department

Mailing Address:

Street / PO Box: 712 S. Stagecoach Trail Ste 1045
City: San Marcos, TX
Zip: 78666

Payee Name: Hays County Treasurer

Payee Mailing Address:

Street / PO Box: 712 S. Stagecoach Trail, Suite 1094
City: San Marcos, TX
Zip: 78666

State of Texas Comptroller Vendor ID # (9 digit + 3 digit mail code)**:** 17460022415002

DUNS # (9 digits required for subrecipient contractors)**:** 09-7494884

Type of Entity (Choose one)

City: ☐
County: ☑
Other Political Subdivision: ☐

Click on appropriate box

Project Period

Start Date: 1/1/2021
End Date: 12/31/2021

Counties Served

County(ies) Served: Hays

Amount of Funding Allocated: $22,297.00

CONTACT PERSON INFORMATION

Legal Business Name: Hays County Health Department

This form provides information about the appropriate contacts in the contractor's organization in addition to those on the FACE PAGE. If any of the following information changes during the term of the contract, please send written notification to the Contract Management Unit.

Health Director/CEO: Tammy Crumley
Phone: 512-878-6673 Ext:
Fax:
E-mail: tammy. crumley@co.hays.tx.us

Mailing Address (street, city, county, state, & zip):
712 S. Stagecoach Trail, Ste. 1045 San Marcos, TX 78666

B-13/FSR Rep: Amy Frag
Phone: 512-393-2273 Ext:
Fax:
E-mail: amy.fraga@co.hays.tx.us

Mailing Address (street, city, county, state, & zip):
712 S. Stagecoach Trail, Ste 1071 San Marcos, TX 78666

PHEP (HAZARDS) Program Leader:
Phone: Ext:
Fax:
E-mail:

Mailing Address (street, city, county, state, & zip):

SNS (CRI) Coordinator:
Phone: Ext:
Fax:
E-mail:

Mailing Address (street, city, county, state, & zip):

Authorized Signatory for **DocuSign** Ruben Becerra
Phone: 512-393-2205 Ext:
Fax:
E-mail: judge.becerra@co.hays.tx.us

Mailing Address (street, city, county, state, & zip):
111 E. San Antonio St., Ste. 300, San Marcos, TX 78666

Additional Authorized Signatory for **DocuSign** **only if applicable** **(FFATA, Certs, etc)**
Phone: Ext:
Fax:
E-mail:

DocuSign "CC" Person Tammy Crumley
Phone: 512-878-6673 Ext:
Fax:
E-mail: tammy. crumley@co.hays.tx.us

Emergency Contact Tammy Crumley
Cell Phone: 512-878-6673 Ext:
Fax:
E-mail: tammy. crumley@co.hays.tx.us

Mailing Address (street, city, county, state, & zip):
712 S. Stagecoach Trail, Ste. 1045 San Marcos, TX 78666

BUDGET SUMMARY (REQUIRED)

Legal Name of Respondent: **Hays County Health Department**

Budget Categories	Total Budget (1)	DSHS Funds Requested (2)	Direct Federal Funds (3)	Other State Agency Funds* (4)	Local Funding (Match) (5)	Other Funds **(6)**
A. Personnel	$16,294	$14,512			$1,782	
B. Fringe Benefits	$8,738	$7,785			$953	
C. Travel	$0	$0			$0	
D. Equipment	$0	$0			$0	
E. Supplies	$0	$0			$0	
F. Contractual	$1,725	$0			$1,725	
G. Other	$0	$0			$0	
H. Total Direct Costs	$26,757	$22,297	$0	$0	$4,460	$0
I. Indirect Costs	$0	$0				
J. Total (Sum of H and I)	$26,757	$22,297	$0	$0	$4,460	$0
				Match Percentage	**20.00%**	

If the Contractor is using Indirect Costs as Match, then enter the amount in Line 16, Column H.

Revised: 04/14/2014

PERSONNEL Budget Category Detail Form

Legal Name of Respondent: **Hays County Health Department**

PERSONNEL Name + Functional Title	Vacant Y/N	Job Summary	FTEs	Certification or License (Enter NA if not required)	Estimated Monthly Salary/Wage	**Number of Months**	Salary/Wages Requested for Project
Anna Martinez - Medical Assistant/Admin Assistant II-E	N	NCMA TB Nursing Staff, Backup for Nurse and Conducts Administrative Work	0.41	RMA	$2,964	12	$14,512
							$0
							$0
							$0
							$0
							$0
							$0
							$0
							$0
							$0
							$0
							$0
							$0
							$0
							$0
							$0
							$0
							$0
							$0
							$0
						TOTAL FROM PERSONNEL SUPPLEMENTAL SHEETS	$0
						SalaryWage Total	$14,512

FRINGE BENEFITS	**Itemize the elements of fringe benefits in the space below:**			
Fica 6.2% = $900 Medicare 1.45% = $210 Retirement 12.82% = $1,860 Medical, Dental & Life Insurance $11,800 X .408% = $4,814				
Total Number of FTEs:	**0.41**		Fringe Benefit Rate %	53.64%
			Fringe Benefits Total	$7,785

TRAVEL Budget Category Detail Form

Legal Name of Respondent: **Hays County Health Department**

Conference / Workshop Travel Costs

Description of Conference/Workshop	Justification	Location City/State	Number of: Days & Employees	Travel Costs	
				Mileage	
				Airfare	
				Meals	
				Lodging	
				Other Costs	
				Total	$0
				Mileage	
				Airfare	
				Meals	
				Lodging	
				Other Costs	
				Total	$0
				Mileage	$0
				Airfare	$0
				Meals	$0
				Lodging	$0
				Other Costs	$0
				Total	$0
				Mileage	$0
				Airfare	$0
				Meals	$0
				Lodging	$0
				Other Costs	$0
				Total	$0
TOTAL FROM TRAVEL SUPPLEMENTAL CONFERENCE/WORKSHOP BUDGET SHEETS					$0

Total for Conference / Workshop Travel $0

Revised: 3/25/2014

Other / Local Travel Costs

Justification	Number of Miles	Mileage Reimbursement Rate	Mileage Cost (a)	Other Costs (b)	Total (a) + (b)
			$0		$0
			$0		$0
			$0		$0
			$0		$0
			$0		$0
			$0		$0
			$0		$0
TOTAL FROM TRAVEL SUPPLEMENTAL OTHER/LOCAL TRAVEL COSTS BUDGET SHEETS					$0

Total for Other / Local Travel $0

Other / Local Travel Costs: $0 Conference / Workshop Travel Costs: $0 **Total Travel Costs:** $0

Indicate Policy Used: Respondent's Travel Policy State of Texas Travel Policy

Revised: 3/25/2014

EQUIPMENT AND CONTROLLED ASSETS Budget Category
Detail Form

Legal Name of Respondent: **Hays County Health Department**

Itemize, describe and justify the list below. Attach complete specifications or a copy of the purchase order/quote.

Description of Item	Purpose & Justification	Number of Units	Cost Per Unit	Total Cost
				$0
				$0
				$0
				$0
				$0
				$0
				$0
				$0
				$0
				$0
				$0
				$0
				$0
				$0
				$0
				$0
				$0
				$0
			TOTAL FROM EQUIPMENT SUPPLEMENTAL BUDGET SHEETS	$0

Total Amount Requested for Equipment: **$0**

Revised: 3/25/2014

SUPPLIES Budget Category Detail Form

Legal Name of Respondent: **Hays County Health Department**

Itemize and describe each supply item and provide an estimated quantity and cost (i.e. #of boxes & cost/box) if applicable. Provide a justification for each supply item. Costs may be categorized by each general type (e.g., office, computer, medical, educational, etc.)

Description of Item Provide estimated quantity and cost	Purpose & Justification	Total Cost
	TOTAL FROM SUPPLIES SUPPLEMENTAL BUDGET SHEETS	$0

Total Amount Requested for Supplies: **$0**

Revised: 3/25/2014

CONTRACTUAL Budget Category Detail Form

Legal Name of Respondent: **Hays County Health Department**

List contracts for services related to the scope of work that is to be provided by a third party. If a third party is not yet identified, describe the service to be contracted and show contractors as "To Be Named." Justification for any contract that delegates $100,000 or more of the scope of the project in the respondent's funding request, must be attached behind this form.

CONTRACTOR NAME (Agency or Individual)	DESCRIPTION OF SERVICES (Scope of Work)	Justification	METHOD OF PAYMENT (i.e., hourly, daily, weekly, monthly, quarterly, cost reimb., unit rate, lump sum)	# of Payments	RATE OF PAYMENT (i.e., hourly, daily, weekly, monthly, quarterly, cost reimb., unit rate, lump sum)	TOTAL COST
						$0
						$0
						$0
						$0
						$0
						$0
						$0
						$0
						$0
TOTAL FROM CONTRACTUAL SUPPLEMENTAL BUDGET SHEETS						$0

Total Amount Requested for CONTRACTUAL: $0

Revised: 3/25/2014

OTHER COSTS Budget Category Detail Form

Legal Name of Respondent: **Hays County Health Department**

Description of Item Include quantity and cost/quantity	Purpose & Justification	Total Cost
	TOTAL FROM OTHER SUPPLEMENTAL BUDGET SHEETS	$0

Total Amount Requested for Other: **$0**

Revised: 3/25/2014

Indirect Costs

Legal Name of Respondent: **Hays County Health Department**

Total amount of indirect costs allocable to the project: **Amount:**

Indirect costs are based on (mark the statement that is applicable):

The respondent's most recent indirect cost rate approved by a federal cognizant agency or state single audit coordinating agency. Expired rate agreements are not acceptable. Attach a copy of the rate agreement to this form (Form I - 7 Indirect)	**RATE:** **BASE:**	
Applies only to governmental entities . The respondent's current central service cost rate or indirect cost rate. Attach a copy of Certification of Cost Allocation Plan or Certification of Indirect Costs. Note: Governmental units with only a Central Service Cost Rate must also include the indirect cost of the governmental units department (i.e. Health Department). In this case indirect costs will be comprised of central service costs (determined by applying the rate) and the indirect costs of the governmental department. The allocation of indirect costs must be addressed in Part V - Indirect Cost Allocation of the Cost Allocation Plan that is submitted to DSHS.	**RATE:** **TYPE:** **BASE:**	
A cost allocation plan. A cost allocation plan as specified in the DSHS Contractor's Financial Procedures Manual (CFPM), Appendix A must be submitted to DSHS within 60 days of the contract start date.		

GO TO PAGE 2 (below)

Revised: 3/25/2014

If using an central service or indirect cost rate, identify the types of costs that are included (being allocated) in the rate:

Organizations that do not use an indirect cost rate and governmental entities with only a central service rate must identify the types of costs that will be allocated as indirect costs and the methodology used to allocate these costs in the space provided below. The costs/methodology must also be disclosed in Part V-Indirect Cost Allocation of the Cost Allocation Plan that is submitted to DSHS. **Identify the types of costs that are being allocated as indirect costs, the allocation methodology, and the allocation base:**

SUPPLEMENTAL and MATCH FORMS INSTRUCTIONS

The budget templates include a SUPPLEMENTAL and a MATCH page (one per budget category) that are intended to supplement cost reimbursement budgets when there are too many items to fit on the primary budget template. The MATCH pages (one per budget category) are intended to record the required match will be utilized to list detail information for the required match.

The amounts on each supplemental template will automatically populate from the templates and will be inserted on the last line of the primary budget template.

The amounts on each match template will automatically populate from the templates and will be inserted in column labeled "Local Funding Sources (5)"

The SUPPLEMENTAL and MATCH budget templates are:

Personnel Supplemental
Travel Supplemental
Equipment & Controlled Assets Supplemental
Supplies Supplemental
Contractual Supplemental
Other Costs Supplemental

Personnel Match
Travel Match
Equipment & Controlled Assets Match
Supplies Match
Contractual Match
Other Costs Match

PERSONNEL Budget Category Detail Form (Supplemental)

Legal Name of Respondent: **Hays County Health Department**

PERSONNEL Name + Functional Title	Vacant Y/N	Job Summary	FTEs	Certification or License (Enter NA if not required)	Estimated Monthly Salary/Wage	**Number of Months**	Salary/Wages Requested for Project
							$0
							$0
							$0
							$0
							$0
							$0
							$0
							$0
							$0
							$0
							$0
							$0
							$0
			0.00				
					SalaryWage Total		$0

PERSONNEL Budget Category Detail Form (Match)

Legal Name of Respondent: **Hays County Health Department**

PERSONNEL Name + Functional Title	Vacant Y/N	Job Summary	FTEs	Certification or License (Enter NA if not required)	Estimated Monthly Salary/Wage	**Number of Months**	Salary/Wages Requested for Project
53.5	N	NCMA TB Nursing Staff, Backup for Nurse and Conducts Administrative Work	0.05	RMA	$2,964	12	$1,782
							$0
							$0
							$0
							$0
							$0
							$0
							$0
							$0
							$0
							$0
							$0
							$0
							$0
					SalaryWage Total		$1,782

FRINGE BENEFITS	**Itemize the elements of fringe benefits in the space below:**	
Fica 6.2% = $110 Medicare 1.45% = $26 Retirement 12.82% = $228 Medical, Dental & Life Insurance $11,800 X .05% = $589		
	Fringe Benefit Rate %	53.50%
	Fringe Benefits Total	$953

TRAVEL Budget Category Detail Form (Supplemental)

Legal Name of Respondent: **Hays County Health Department**

Conference / Workshop Travel Costs

Description of Conference/Workshop	Justification	Location (City, State)	Number of: Days & Employees	Travel Costs	
				Mileage	
				Airfare	
				Meals	
				Lodging	
				Other Costs	
				Total	$0
				Mileage	
				Airfare	
				Meals	
				Lodging	
				Other Costs	
				Total	$0
				Mileage	
				Airfare	
				Meals	
				Lodging	
				Other Costs	
				Total	$0
				Mileage	
				Airfare	
				Meals	
				Lodging	
				Other Costs	
				Total	$0
				Mileage	
				Airfare	
				Meals	
				Lodging	
				Other Costs	
				Total	$0

Total for Conference / Workshop Travel $0

Other / Local Travel Costs

Revised: 3/25/2014

Justification	Number of Miles	Mileage Reimbursement Rate	Mileage Cost (a)	Other Costs (b)	Total (a) + (b)
			$0		$0
			$0		$0
			$0		$0
			$0		$0
			$0		$0
			$0		$0
			$0		$0
			$0		$0
			$0		$0

Total for Other / Local Travel $0

Other / Local Travel Costs: $0 Conference / Workshop Travel Costs: $0 **Total Travel Costs:** $0

Revised: 3/25/2014

TRAVEL Budget Category Detail Form (Match)

Legal Name of Respondent: **Hays County Health Department**

Conference / Workshop Travel Costs

Description of Conference/Workshop	Justification	Location (City, State)	Number of: Days & Employees	Travel Costs	
				Mileage	
				Airfare	
				Meals	
				Lodging	
				Other Costs	
				Total	$0
				Mileage	
				Airfare	
				Meals	
				Lodging	
				Other Costs	
				Total	$0
				Mileage	
				Airfare	
				Meals	
				Lodging	
				Other Costs	
				Total	$0
				Mileage	
				Airfare	
				Meals	
				Lodging	
				Other Costs	
				Total	$0
				Mileage	
				Airfare	
				Meals	
				Lodging	
				Other Costs	
				Total	$0

Total for Conference / Workshop Travel $0

Other / Local Travel Costs

Revised: 3/25/2014

Justification	Number of Miles	Mileage Reimbursement Rate	Mileage Cost (a)	Other Costs (b)	Total (a) + (b)
			$0		$0
			$0		$0
			$0		$0
			$0		$0
			$0		$0
			$0		$0
			$0		$0
			$0		$0
			$0		$0

Total for Other / Local Travel $0

Other / Local Travel Costs: $0 Conference / Workshop Travel Costs: $0 **Total Travel Costs:** $0

Revised: 3/25/2014

EQUIPMENT AND CONTROLLED ASSETS Budget Category
Detail Form (Supplemental)

Legal Name of Respondent: **Hays County Health Department**

Itemize, describe and justify the list below. Attach complete specifications or a copy of the purchase order. See attached example for equipment definition and detailed instructions to complete this form.

Description of Item	Purpose & Justification	Number of Units	Cost Per Unit	Total
				$0
				$0
				$0
				$0
				$0
				$0
				$0
				$0
				$0
				$0
				$0
				$0
				$0
				$0
				$0
				$0
				$0
				$0

Total Amount Requested for Equipment: **$0**

Revised: 3/25/2014

EQUIPMENT AND CONTROLLED ASSETS Budget Category
Detail Form (Match)

Legal Name of Respondent: **Hays County Health Department**

Itemize, describe and justify the list below. Attach complete specifications or a copy of the purchase order. See attached example for equipment definition and detailed instructions to complete this form.

Description of Item	Purpose & Justification	Number of Units	Cost Per Unit	Total
				$0
				$0
				$0
				$0
				$0
				$0
				$0
				$0
				$0
				$0
				$0
				$0
				$0
				$0
				$0
				$0
				$0
				$0

Total Amount Requested for Equipment: **$0**

Revised: 3/25/2014

SUPPLIES Budget Category Detail Form (Supplemental)

Legal Name of Respondent: **Hays County Health Department**

Itemize and describe each supply item and provide an estimated quantity and cost (i.e. # of boxes & cost/box) if applicable. Provide a justification for each supply item. Costs may be categorized by each general type (i.e., office, computer, medical, client incentives, educational, etc.)

Description of Item [If applicable, provide estimated quantity and cost (i.e. # of boxes & cost/box)]	Purpose & Justification	Total Cost

Total Amount Requested for Supplies: **$0**

Revised: 3/25/2014

SUPPLIES Budget Category Detail Form (Match)

Legal Name of Respondent: **Hays County Health Department**

Itemize and describe each supply item and provide an estimated quantity and cost (i.e. # of boxes & cost/box) if applicable. Provide a justification for each supply item. Costs may be categorized by each general type (i.e., office, computer, medical, client incentives, educational, etc.)

Description of Item [If applicable, provide estimated quantity and cost (i.e. # of boxes & cost/box)]	Purpose & Justification	Total Cost

Total Amount Requested for Supplies: **$0**

Revised: 3/25/2014

CONTRACTUAL Budget Category Detail Form (Supplemental)

Legal Name of Respondent: **Hays County Health Department**

List contracts for services related to the scope of work that is to be provided by a third party. If a third party is not yet identified, describe the service to be contracted and show contractors as "To Be Named." Justification for any contract that de

CONTRACTOR NAME (Agency or Individual)	DESCRIPTION OF SERVICES (Scope of Work)	Justification	METHOD OF PAYMENT (i.e., hourly, daily, weekly, monthly, quarterly, cost reimb., unit rate, lump sum)	# of Months, Hours, Units, etc.	RATE OF PAYMENT (i.e., hourly, daily, weekly, monthly, quarterly, cost reimb., unit rate, lump sum)	TOTAL
						$0
						$0
						$0
						$0
						$0
						$0
						$0
						$0
						$0
						$0

Total Amount Requested for CONTRACTUAL: $0

Revised: 3/25/2014

CONTRACTUAL Budget Category Detail Form (Match)

Legal Name of Respondent: **Hays County Health Department**

List contracts for services related to the scope of work that is to be provided by a third party. If a third party is not yet identified, describe the service to be contracted and show contractors as "To Be Named." Justification for any contract that de

CONTRACTOR NAME (Agency or Individual)	DESCRIPTION OF SERVICES (Scope of Work)	Justification	METHOD OF PAYMENT (i.e., hourly, daily, weekly, monthly, quarterly, cost reimb., unit rate, lump sum)	# of Months, Hours, Units, etc.	RATE OF PAYMENT (i.e., hourly, daily, weekly, monthly, quarterly, cost reimb., unit rate, lump sum)	TOTAL
						$0
Central Texas Medical Center	Chest X-Ray and Radiology Readings: $15 per Reading	X-rays and readings for clients. One view for healthy adults and 2 views for children under the age of 16 and active TB cases, or TB suspects.	Unit Rate	22	$15.00	$330
Central Texas Medical Center	Chest X-Ray and Radiology Readings: $30 per 1 view X-Ray	X-rays and readings for clients. One view for healthy adults and 2 views for children under the age of 16 and active TB cases, or TB suspects.	Unit Rate	22	$30.00	$660
Central Texas Medical Center	Chest X-Ray and Radiology Readings: $35 per 2 view X-Ray	X-rays and readings for clients. One view for healthy adults and 2 views for children under the age of 16 and active TB cases, or TB suspects.	Unit Rate	21	$35.00	$735
						$0
						$0
						$0
						$0
						$0
						$0

Total Amount Requested for CONTRACTUAL: $1,725

Revised: 3/25/2014

OTHER COSTS Budget Category Detail Form (Supplemental)

Legal Name of Respondent: **Hays County Health Department**

Description of Item [If applicable, include quantity and cost/quantity (i.e. # of units & cost/unit)]	Purpose & Justification	Total Cost

Total Amount Requested for Other: **$0**

Revised: 3/25/2014

OTHER COSTS Budget Category Detail Form (Match)

Legal Name of Respondent: **Hays County Health Department**

Description of Item [If applicable, include quantity and cost/quantity (i.e. # of units & cost/unit)]	Purpose & Justification	Total Cost

Total Amount Requested for Other: **$0**

Revised: 3/25/2014

AGENDA ITEM REQUEST FORM

Hays County Commissioners Court
Tuesdays at 9:00 AM

Request forms are due in Microsoft Word Format via email by 2:00 p.m. on Wednesday.

AGENDA ITEM

Amend various departmental operating, special revenue and capital project budgets in preparation for Fiscal Year 2020 3rd Quarter financial reporting.

ITEM TYPE	MEETING DATE	AMOUNT REQUIRED
CONSENT	July 21, 2020	N/A

LINE ITEM NUMBER

Various

AUDITOR USE ONLY

AUDITOR COMMENTS:

PURCHASING GUIDELINES FOLLOWED: N/A **AUDITOR REVIEW:** MARISOL VILLARREAL-ALONZO

REQUESTED BY	SPONSOR	CO-SPONSOR
Marisol Villarreal-Alonzo	INGALSBE	N/A

SUMMARY

AGENDA ITEM REQUEST FORM

Hays County Commissioners Court
Tuesdays at 9:00 AM

Request forms are due in Microsoft Word Format via email by 2:00 p.m. on Wednesday.

AGENDA ITEM

Amend the Transportation Department's budget for road-building materials valued at $33,108.40 to receive approximately 520 tons of Limestone Rock Asphalt, Type II, Grade DS material from the Texas Department of Transportation through the 2020 TxDOT Surplus Program and add to the department's inventory.

ITEM TYPE	MEETING DATE	AMOUNT REQUIRED
CONSENT	July 21, 2020	$33,108.40

LINE ITEM NUMBER

020-710-00.5351

AUDITOR USE ONLY

AUDITOR COMMENTS:

PURCHASING GUIDELINES FOLLOWED: N/A **AUDITOR REVIEW:** MARISOL VILLARREAL-ALONZO

REQUESTED BY	SPONSOR	CO-SPONSOR
Jerry Borcherding	BECERRA	

SUMMARY

The Transportation Department will receive road-building materials offered to Hays County by the State through a second round of the 2020 TxDOT Surplus Program. This material will be available for use on any county-maintained roadway.

Attachment: TxDot Surplus Program Purchase Order

Purchase Order

PO No. 20118555

Order Date: 7/16/2020

Internal Tracking No.: 601320000045736

Contractor Info
Martin Marietta Materials, Inc.
15618485781
5710 West Hausman Rd. Suite 121
San Antonio, TX 78249

(210) 208-4070

Bill To
South RCS Accounts Payable
RCS_Invoices@txdot.gov
4615 NW Loop 410
D52-12
San Antonio TX 78229-5172

Ship To
Edward Till
Txdot San Marcos Maint Sect
512-353-1061
2171
Yarrington Road
San Marcos TX 78666

NOTE TO CONTRACTOR: Dist 14 - Delivery to San Marcos County Yard, 2171 Yarrington Road, San Marcos, TX. 78666, Delivery date 8/3/2020 - 8:00 am, Txdot Contact: Edward Till - Ph# 512-353-1061 or Tim Vande Vorde - Ph# 512-738-0747.

Delivery Instructions:
End Dumps are required.

Disclaimer
The State of Texas is exempt from all Federal Excise Taxes except as noted in each contract.
STATE AND CITY SALES TAX EXEMPTION CERTIFICATE:
The undersigned claims an exemption from taxes under Texas Tax Code, Section 151.309(4), for purchase of tangible personal property described in this numbered order, purchased from contractor and/or shipper listed above, as this property is being secured for the exclusive use of the State of Texas, or a Texas County, City, Special District, or Other Political Subdivision.

Bobby Pounds

Texas Comptroller of Public Accounts – Statewide Procurement Division

Agency	Purchaser	Email	Phone
Texas Department of Transportation - 601	John Albert Landa	albert.landa@txdot.gov	(361) 808-2386

Line #	NIGP Code	Commodity Code/ Supplier Part #	Item	QTY	UOM	Unit Price	Extended Price
1	74514	74514977670	**South Region: Line Item 330.138 ITEM 330, SS T9210 LIMESTONE ROCK ASPHALT PP, TYPE II, GRADE DS.** Contract: 748-S1 Contract Type: Term Delivery ARO (days): 3 Delivery Date: 8/3/2020 Line Item: 330.138 Plant Location: 4483 Ranch Road 1022 Uvalde, TX 78801 Plant Address: 29.139569, -100.038032 Plant Phone: (210) 208-4085 Notes: NIPG# 74514630685 - For Txdot Internal Use Only.	520	TON	40.99	$21,314.80

Purchase Order

PO No. 20118555

Order Date: 7/16/2020

Internal Tracking No.: 601320000045736

Line #	NIGP Code	Commodity Code/ Supplier Part #	Item	QTY	UOM	Unit Price	Extended Price
2	74514	74514977670	**Delivery Type - Storage Stockpile**	162	MILE	0.14	$11,793.60
						Total	**$33,108.40**

AGENDA ITEM REQUEST FORM

Hays County Commissioners Court

Tuesdays at 9:00 AM

Request forms are due in Microsoft Word Format via email by 2:00 p.m. on Wednesday.

AGENDA ITEM

Discussion and possible action to authorize the County Judge to execute a Professional Services Agreement between Hays County and HNTB Corporation to provide environmental and public involvement services related to the FM 150 (Center St) relocation of UP switching line (Kyle UPRR Siding Relocation) project as part of the 2016 Road Bond Program.

ITEM TYPE	MEETING DATE	AMOUNT REQUIRED
ACTION-ROADS	July 21, 2020	$250,000.00

LINE ITEM NUMBER

034-802-96-650.5631_400

AUDITOR USE ONLY

AUDITOR COMMENTS:

PURCHASING GUIDELINES FOLLOWED: YES **AUDITOR REVIEW:** MARISOL VILLARREAL-ALONZO

REQUESTED BY	SPONSOR	CO-SPONSOR
	JONES	N/A

SUMMARY

The additional engineering services include providing environmental services to develop Kyle UPRR siding relocation (proposed crossing FM 1626 and FM 172/Kohler's Crossing) through downtown Kyle. Additional UPRR ROW is required at various locations through the project limits, including additional UPRR ROW from the FM 1626 and the FM 171 rights-of-way. The contract scope is to secure environmental clearance for the proposed rights of way along the project corridor and the proposed connections to TxDOT right of way. This effort will be funded through the 2016 Road Bond Project FM 150 (Center St)-relocation of UP switching line [13-650-034].

HAYS COUNTY
CONTRACT FOR ENGINEERING SERVICES

FIRM: **HNTB Corporation ("Engineer")**
ADDRESS: **701 Brazos, Suite 450, Austin, 78701**
PROJECT: **Kyle UPRR Siding – Additional Professional Engineering Services ("Project")**

THE STATE OF TEXAS §
§
COUNTY OF HAYS §

THIS CONTRACT FOR ENGINEERING SERVICES ("Contract") is made and entered into, effective as the date of the last party's execution hereinbelow, by and between Hays County, Texas, a political subdivision of the State of Texas, whose offices are located at 111 E. San Antonio Street, Suite 300, San Marcos, Texas, 78666 (hereinafter referred to as "County"), and Engineer, and such Contract is for the purpose of contracting for professional engineering services.

RECITALS:

WHEREAS, V.T.C.A., Government Code §2254.002(2)(A)(vii) under Subchapter A entitled "Professional Services Procurement Act" provides for the procurement by counties of services of professional engineers; and

WHEREAS, County and Engineer desire to contract for such professional engineering services; and

WHEREAS, County and Engineer wish to document their agreement concerning the requirements and respective obligations of the parties;

NOW, THEREFORE, WITNESSETH:

That for and in consideration of the mutual promises contained herein and other good and valuable considerations, and the covenants and agreements hereinafter contained to be kept and performed by the respective parties hereto, it is agreed as follows:

ARTICLE 1
CONTRACT DOCUMENTS AND APPLICABLE PROJECT DOCUMENTS

A. Contract Documents. The Contract Documents consist of this Contract, any exhibits attached hereto (which exhibits are hereby incorporated into and made a part of this Contract), any fully executed Work Authorizations; any fully executed Supplemental Work Authorizations and all fully executed Contract Amendments (as defined herein in Article 14) which are subsequently issued. These form the entire contract, and all are as fully a part of this Contract as if attached to this Contract or repeated herein.

B. Project Documents. In addition to any other pertinent and necessary Project documents, the following documents shall be used in the development of the Project:

A. TxDOT 2011 Texas Manual of Uniform Traffic Control Devices for Streets and Highways, including latest revisions
B. Texas Department of Transportation's Standard Specifications for Construction of Highways, Streets, and Bridges, 2014 (English units)
C. National Environmental Policy Act (NEPA)
D. Texas Accessibility Standards (TAS) of the Architectural Barriers Act, Article 9102, Texas Civil Statutes, Effective April 4, 1994, including latest revisions
E. Americans with Disabilities Act (ADA) Regulations
F. U.S. Army Corps Regulations
G. International Building Code, current edition as updated
H. Hays County Design Criteria & Project Development Manual, latest edition
I. Hays County Multi-Corridor Transportation Plan Project Level Environmental Review and Compliance Protocol, latest edition
J. Hays County Protocol for Sustainable Roadsides, latest edition
K. TxDOT Bridge Design Manual - LRFD, latest edition
L. TxDOT Geotechnical Manual, latest edition

ARTICLE 2
NON-COLLUSION; DEBARMENT; AND FINANCIAL INTEREST PROHIBITED

A. Non-collusion. Engineer warrants that he/she/it has not employed or retained any company or persons, other than a bona fide employee working solely for Engineer, to solicit or secure this Contract, and that he/she/it has not paid or agreed to pay any company or engineer any fee, commission, percentage, brokerage fee, gifts, or any other consideration, contingent upon or resulting from the award or making of this Contract. For breach or violation of this warranty, County reserves and shall have the right to annul this Contract without liability or, in its discretion and at its sole election, to deduct from the contract price or compensation, or to otherwise recover, the full amount of such fee, commission, percentage, brokerage fee, gift or contingent fee.

B. Debarment Certification. Engineer must sign the Debarment Certification enclosed herewith as **Exhibit A**.

C. Financial Interest Prohibited. Engineer covenants and represents that Engineer, his/her/its officers, employees, agents, consultants and subcontractors will have no financial interest, direct or indirect, in the purchase or sale of any product, materials or equipment that will be recommended or required for the construction of the Project.

ARTICLE 3
ENGINEERING SERVICES

Engineer shall perform Engineering Services as identified in **Exhibit B** entitled "Engineering Services."

County will prepare and issue Work Authorizations, in substantially the same form identified and attached hereto as **Exhibit C** and entitled "Work Authorization No. ____", to authorize the Engineer to perform one or more tasks of the Engineering Services. Each Work Authorization will include a description of the work to be performed, a description of the tasks and milestones, a work schedule for the tasks, definite review times by County and Engineer of all Engineering Services and a fee amount agreed upon by the County and Engineer. The amount payable for a Work Authorization shall be supported by the estimated cost of each work task as described in the Work Authorization. The Work Authorization will not waive the Engineer's responsibilities and obligations established in this Contract. The executed Work Authorizations shall become part of this Contract.

All work must be completed on or before the date specified in the Work Authorization. The Engineer shall promptly notify the County of any event which will affect completion of the Work Authorization, although such notification shall not relieve the Engineer from costs or liabilities resulting from delays in completion of the Work Authorization. Should the review times or Engineering Services take longer than shown on the Work Authorization, through no fault of Engineer, Engineer may submit a timely written request for additional time, which shall be subject to the approval of the County. Any changes in a Work Authorization shall be enacted by a written Supplemental Work Authorization before additional costs may be incurred. Any Supplemental Work Authorization must be executed by both parties within the period specified in the Work Authorization.

ARTICLE 4
CONTRACT TERM

A. Term. The Engineer is expected to complete the Engineering Services described herein in accordance with the above described Work Authorizations or any Supplemental Work Authorization related thereto. If Engineer does not perform the Engineering Services in accordance with each applicable Work Authorization or any Supplemental Work Authorization related thereto, then County shall have the right to terminate this Contract as set forth below in Article 20. So long as the County elects not to terminate this Contract, it shall continue from day to day until such time as the Engineering Services are completed in accordance with each applicable Work Authorization or any Supplemental Work Authorization related thereto. Any Engineering Services performed or costs incurred after the date of termination shall not be eligible for reimbursement. Engineer shall

notify County in writing as soon as possible if he/she/it determines, or reasonably anticipates, that the Engineering Services will not be completed in accordance with an applicable Work Authorization or any Supplemental Work Authorization related thereto.

B. Work Authorizations. Engineer acknowledges that each Work Authorization is of critical importance, and agrees to undertake all reasonably necessary efforts to expedite the performance of Engineering Services required herein so that construction of the Project will be commenced and completed as scheduled. In this regard, and subject to adjustments in a particular Work Authorization, as provided in Article 3 herein, Engineer shall proceed with sufficient qualified personnel and consultants necessary to fully and timely accomplish all Engineering Services required under this Contract in a professional manner.

C. Commencement of Engineering Services. After execution of this Contract, Engineer shall not proceed with Engineering Services until Engineer has been thoroughly briefed on the scope of the Project and has been notified in writing by the County to proceed, as provided in Article 8.

ARTICLE 5
COMPENSATION AND EXPENSES

County shall pay and Engineer agrees to accept up to the amount shown below as full compensation for the Engineering Services performed and to be performed under this Contract. The basis of compensation for the services of principals and employees engaged in the performance of the Engineering Services shall be based on the Rate Schedule set forth in the attached **Exhibit D**.

The maximum amount payable under this Contract, without modification, is **TWO HUNDRED AND FIFTY THOUSAND Dollars ($250,000)** (the "Compensation Cap"), provided that any amounts paid or payable shall be solely pursuant to a validly issued Work Authorization or any Supplemental Work Authorization related thereto. In no event may the aggregate amount of compensation authorized under Work Authorizations and Supplemental Work Authorizations exceed the Compensation Cap. The Compensation Cap shall be revised equitably only by written Contract Amendments executed by both parties in the event of a change the overall scope of the Engineering Services set forth in **Exhibit B**, as authorized by County.

The Compensation Cap is based upon all labor and non-labor costs estimated to be required in the performance of the Engineering Services provided for under this Contract. Should the actual costs of all labor and non-labor costs rendered under this Contract be less than the above stated Compensation Cap, then Engineer shall receive compensation for only actual fees and costs of the Engineering Services actually rendered and incurred, which may be less than the above stated Compensation Cap.

The Compensation Cap herein referenced may be adjusted for Additional Engineering Services requested and performed only if approved by a written Contract Amendment signed by both parties.

Engineer shall prepare and submit to County monthly progress reports in sufficient detail to support the progress of the Engineering Services and to support invoices requesting monthly payment. The format for such monthly progress reports and invoices must be in a format acceptable to County. Satisfactory progress of Engineering Services shall be an absolute condition of payment.

Engineer shall be reimbursed for actual non-labor and subcontract expenses incurred in the performance of the services under this Contract at the Engineer's invoice cost. Invoices requesting reimbursement for costs and expenditures related to the Project (reimbursables) must be accompanied by copies of the provider's invoice. The copies of the provider's invoice must evidence the actual costs billed to Engineer without mark-up.

ARTICLE 6
METHOD OF PAYMENT

Payments to Engineer shall be made while Engineering Services are in progress. Engineer shall prepare and submit to County's Road Bond Program Manager, not more frequently than once per month, a progress report as referenced in Article 5 above. Such progress report shall state the percentage of completion of Engineering Services accomplished for an applicable Work Authorization or any Supplemental Work Authorization related thereto during that billing period and to date. This submittal shall also include a progress assessment report in a form acceptable to the County Auditor.

Simultaneous with submission of such progress report, Engineer shall prepare and submit one (1) original of a certified invoice to the County Auditor in a form acceptable to the County Auditor. All invoices submitted to County must, at a minimum, be accompanied by an original complete packet of supporting documentation and time sheets detailing hours worked by staff persons with a description of the work performed by such persons. For Additional Engineering Services performed pursuant to this Contract, a separate invoice or itemization of the Additional Engineering Services must be presented with the same aforementioned requirements.

Payments shall be made by County based upon Engineering Services actually provided and performed. Upon timely receipt and approval of each statement, County shall make a good faith effort to pay the amount which is due and payable within thirty (30) days of the County Auditor's receipt. County reserves the right to reasonably withhold payment pending verification of satisfactory Engineering Services performed. Engineer has the responsibility to submit proof to County, adequate and sufficient in its determination, that tasks of an applicable Work Authorization or any Supplemental Work Authorization related thereto were completed.

The certified statements shall show the total amount earned to the date of submission and shall show the amount due and payable as of the date of the current statement. Final payment does not relieve Engineer of the responsibility of correcting any errors and/or omissions resulting from his/her/its negligence.

Upon submittal of the initial invoice, Engineer shall provide the County Auditor with an Internal Revenue Form W-9, Request for Taxpayer Identification Number and Certification that is complete in compliance with the Internal Revenue Code, its rules and regulations.

ARTICLE 7
PROMPT PAYMENT POLICY

In accordance with Chapter 2251, V.T.C.A., Texas Government Code, payment to Engineer will be made within thirty (30) days of the day on which the performance of services was complete, or within thirty (30) days of the day on which the County Auditor receives a correct invoice for services, whichever is later.

Engineer may charge a late fee (fee shall not be greater than that which is permitted by Texas law) for payments not made in accordance with this prompt payment policy; however, this policy does not apply in the event:

A. There is a bona fide dispute between County and Engineer concerning the supplies, materials, or equipment delivered or the services performed that causes the payment to be late; or

B. The terms of a federal contract, grant, regulation, or statute prevent County from making a timely payment with federal funds; or

C. There is a bona fide dispute between Engineer and a subcontractor/subconsultant or between a subcontractor/subconsultant and its supplier concerning supplies, materials, or equipment delivered or the Engineering Services performed which causes the payment to be late; or

D. The invoice is not mailed to the County Auditor in strict accordance with instructions, if any, on the purchase order, or this Contract or other such contractual agreement.

The County Auditor shall document to Engineer the issues related to disputed invoices within ten (10) calendar days of receipt of such invoice. Any non-disputed invoices shall be considered correct and payable per the terms of Chapter 2251, V.T.C.A., Texas Government Code.

ARTICLE 8
COMMENCEMENT OF ENGINEERING SERVICES

The Engineer shall not proceed with any task of the Engineering Services until Engineer has been thoroughly briefed on the scope of the Project and instructed, in writing by the County, to proceed with the applicable Engineering Services. The County shall not be responsible for work performed or costs incurred by Engineer related to any task for which a Work Authorization or a Supplemental Work Authorization related thereto has not been issued and signed by both parties. Engineer shall not be required to perform any work for which a Work Authorization or a Supplemental Work Authorization related thereto has not been issued and signed by both parties.

ARTICLE 9
PROJECT TEAM

County's Designated Representative for purposes of this Contract is as follows:

County's Road Bond Program Manager
Attn: Michael Weaver
HNTB Corporation
701 Brazos, Suite 450
Austin, Texas 78701

County shall have the right, from time to time, to change the County's Designated Representative by giving Engineer written notice thereof. With respect to any action, decision or determination which is to be taken or made by County under this Contract, the County's Designated Representative may take such action or make such decision or determination or shall notify Engineer in writing of an individual responsible for and capable of taking such action, decision or determination and shall forward any communications and documentation to such individual for response or action. Actions, decisions or determinations by the County's Designated Representative on behalf of County shall be done in his or her reasonable business judgment unless express standards or parameters therefor are included in this Contract, in which case, actions taken by the County's Designated Representative shall be in accordance with such express standards or parameters. Any consent, approval, decision or determination hereunder by the County's Designated Representative shall be binding on County; *provided, however,* the County's Designated Representative shall not have any right to modify, amend or terminate this Contract, an Executed Work Authorization, an executed Supplemental Work Authorization or executed Contract Amendment. County's Designated Representative shall not have any authority to execute a Contract Amendment, Work Authorization or any Supplemental Work Authorization unless otherwise granted such authority by the Hays County Commissioners Court.

Engineer's Designated Representative for purposes of this Contract is as follows:

Michelle Dippel
Vice President
HNTB Corporation
Austin, Texas, 78701

Engineer shall have the right, from time to time, to change the Engineer's Designated Representative by giving County written notice thereof. With respect to any action, decision or determination which is to be taken or made by Engineer under this Contract, the Engineer's Designated Representative may take such action or make such decision or determination or shall notify County in writing of an individual responsible for and capable of taking such action, decision or determination and shall forward any communications and documentation to such individual for response or action. Actions, decisions or determinations by the Engineer's Designated Representative on behalf of Engineer shall be done in his or her reasonable business judgment unless express standards or parameters therefor are included in this Contract, in which case, actions taken by the Engineer's Designated Representative shall be in accordance with such

express standards or parameters. Any consent, approval, decision or determination hereunder by the Engineer's Designated Representative shall be binding on Engineer. Engineer's Designated Representative shall have the right to modify, amend and execute Work Authorizations, Supplemental Work Authorizations and Contract Amendments on behalf of Engineer.

ARTICLE 10
PROGRESS EVALUATION

Engineer shall, from time to time during the progress of the Engineering Services, confer with County at County's election. Engineer shall prepare and present such information as may be pertinent and necessary, or as may be reasonably requested by County, in order for County to evaluate features of the Engineering Services. At the request of County or Engineer, conferences shall be provided at Engineer's office, the offices of County, or at other locations designated by County. When requested by County, such conferences shall also include evaluation of the Engineering Services. County may, from time to time, require Engineer to appear and provide information to the Hays County Commissioners Court.

Should County determine that the progress in Engineering Services does not satisfy an applicable Work Authorization or any Supplemental Work Authorization related thereto, then County shall review same with Engineer to determine corrective action required.

Engineer shall promptly advise County in writing of events which have or may have a significant impact upon the progress of the Engineering Services, including but not limited to the following:

A. Problems, delays, adverse conditions which may materially affect the ability to meet the objectives of an applicable Work Authorization or any Supplemental Work Authorization related thereto, or preclude the attainment of Project Engineering Services units by established time periods; and such disclosure shall be accompanied by statement of actions taken or contemplated, and County assistance needed to resolve the situation, if any; and

B. Favorable developments or events which enable meeting goals sooner than anticipated in relation to an applicable Work Authorization's or any Supplemental Work Authorization related thereto.

ARTICLE 11
SUSPENSION

Should County desire to suspend the Engineering Services, but not to terminate this Contract, then such suspension may be effected by County giving Engineer thirty (30) calendar days' verbal notification followed by written confirmation to that effect. Such thirty-day notice may be waived in writing by agreement and signature of both parties. The Engineering Services may be reinstated and resumed in full force and effect within sixty (60) days of receipt of written notice from County to resume the Engineering Services. Such sixty-day (60) notice may be waived in writing by agreement and signature of both parties. If this Contract is suspended for more than thirty (30) days, Engineer shall have the option of terminating this Contract and, in the event, Engineer shall be compensated for all Engineering Services performed and reimbursable expenses incurred, provided such Engineering Services and reimbursable expenses have been previously authorized and approved by County, to the effective date of suspension.

If County suspends the Engineering Services, the contract period as determined in Article 4, and the Work Authorization or any Supplemental Work Authorization related thereto, shall be extended for a time period equal to the suspension period.

County assumes no liability for Engineering Services performed or costs incurred prior to the date authorized by County for Engineer to begin Engineering Services, and/or during periods when Engineering Services is suspended, and/or subsequent to the completion date.

ARTICLE 12
ADDITIONAL ENGINEERING SERVICES

If Engineer forms a reasonable opinion that any work he/she/it has been directed to perform is beyond the overall scope of this Contract, as set forth in **Exhibit B,** and as such constitutes extra work ("Additional Engineering Services"), he/she/it shall promptly notify County in writing. In the event County finds that such work does constitute Additional Engineering Services, County shall so advise Engineer and a written Contract Amendment will be executed between the parties as provided in Article 14. Any increase to the Compensation Cap due to Additional Engineering Services must be set forth in such Contract Amendment. Engineer shall not perform any proposed Additional Engineering Services nor incur any additional costs prior to the execution, by both parties, of a written Contract Amendment. Following the execution of a Contract Amendment that provides for Additional Engineering Services, a written Work Authorization, which sets forth the Additional Engineering Services to be performed, must be executed by the parties. County shall not be responsible for actions by Engineer nor for any costs incurred by Engineer relating to Additional Engineering Services not directly associated with the performance of the Engineering Services authorized in this Contract, by a fully executed Work Authorization or a fully executed Contract Amendment thereto.

ARTICLE 13
CHANGES IN COMPLETED ENGINEERING SERVICES

If County deems it necessary to request changes to previously satisfactorily completed

Engineering Services or parts thereof which involve changes to the original Engineering Services or character of Engineering Services under this Contract, then Engineer shall make such revisions as requested and as directed by County. Such revisions shall be considered as Additional Engineering Services and paid for as specified under Article 12.

Engineer shall make revisions to Engineering Services authorized hereunder as are necessary to correct negligent errors appearing therein, when required to do so by County. No additional compensation shall be due for such Engineering Services.

ARTICLE 14
CONTRACT AMENDMENTS

The terms set out in this Contract may be modified by a written fully executed Contract Amendment. Changes and modifications to a fully executed Work Authorization shall be made in the form of a Supplemental Work Authorization. To the extent that such changes or modifications to a Work Authorization do not also require modifications to the terms of this Contract (i.e. changes to the overall scope of Engineering Services set forth in **Exhibit B**, modification of the Compensation Cap, etc.) a Contract Amendment will not be required.

ARTICLE 15
USE OF DOCUMENTS

All documents, including but not limited to drawings, specifications and data or programs stored electronically, (hereinafter referred to as "Engineering Work Products") prepared by Engineer and its subcontractors/subconsultants are related exclusively to the services described in this Contract and are intended to be used with respect to this Project. However, it is expressly understood and agreed by and between the parties hereto that all of Engineer's designs under this Contract (including but not limited to tracings, drawings, estimates, specifications, investigations, studies and other documents, completed or partially completed), shall be the property of County to be thereafter used in any lawful manner as County elects. Any such subsequent use made of documents by County shall be at County's sole risk and without liability to Engineer.

By execution of this Contract and in confirmation of the fee for services to be paid under this Contract, Engineer hereby conveys, transfers and assigns to County all rights under the Federal Copyright Act of 1976 (or any successor copyright statute), as amended, all common law copyrights and all other intellectual property rights acknowledged by law in the Project Designs and work product developed under this Contract. Copies may be retained by Engineer. Engineer shall be liable to County for any loss or damage to any such documents while they are in the possession of or while being worked upon by Engineer or anyone connected with Engineer, including agents, employees, Engineers or subcontractors/subconsultants. All documents so lost or damaged shall be replaced or restored by Engineer without cost to County.

Upon execution of this Contract, Engineer grants to County permission to reproduce Engineer's work and documents for purposes of constructing, using and maintaining the Project, provided that County shall comply with its obligations, including prompt payment of all sums when due, under this Contract. Engineer shall obtain similar permission from Engineer's

subcontractors/subconsultants consistent with this Contract. If and upon the date Engineer is adjudged in default of this Contract, County is permitted to authorize other similarly credentialed design professionals to reproduce and, where permitted by law, to make changes, corrections or additions to the work and documents for the purposes of completing, using and maintaining the Project.

County shall not assign, delegate, sublicense, pledge or otherwise transfer any permission granted herein to another party without the prior written consent of Engineer. However, County shall be permitted to authorize the contractor, subcontractors and material or equipment suppliers to reproduce applicable portions of the Engineering Work Products appropriate to and for use in the execution of the Work. Submission or distribution of Engineering Work Products to meet official regulatory requirements or for similar purposes in connection with the Project is permitted. Any unauthorized use of the Engineering Work Products shall be at County's sole risk and without liability to Engineer and its Engineers.

Prior to Engineer providing to County any Engineering Work Products in electronic form or County providing to Engineer any electronic data for incorporation into the Engineering Work Products, County and Engineer shall by separate written contract set forth the specific conditions governing the format of such Engineering Work Products or electronic data, including any special limitations not otherwise provided in this Contract. Any electronic files are provided by Engineer for the convenience of County, and use of them is at County's sole risk. In the case of any defects in electronic files or any discrepancies between them and any hardcopy of the same documents prepared by Engineer, the hardcopy shall prevail. Only printed copies of documents conveyed by Engineer shall be relied upon.

Engineer shall have no liability for changes made to the drawings by other engineers subsequent to the completion of the Project. Any such change shall be sealed by the engineer making that change and shall be appropriately marked to reflect what was changed or modified.

ARTICLE 16
PERSONNEL, EQUIPMENT AND MATERIAL

Engineer shall furnish and maintain, at its own expense, quarters for the performance of all Engineering Services, and adequate and sufficient personnel and equipment to perform the Engineering Services as required. All employees of Engineer shall have such knowledge and experience as will enable them to perform the duties assigned to them. Any employee of Engineer who, in the reasonable opinion of County, is incompetent or whose conduct becomes detrimental to the Engineering Services shall immediately be removed from association with the Project when so instructed by County. Engineer certifies that it presently has adequate qualified personnel in its employment for performance of the Engineering Services required under this Contract, or will obtain such personnel from sources other than County. Engineer may not change the Project Manager without prior written consent of County.

ARTICLE 17
SUBCONTRACTING

Engineer shall not assign, subcontract or transfer any portion of the Engineering Services under this Contract without prior written approval from County. All subcontracts shall include the provisions required in this Contract. No subcontract shall relieve Engineer of any responsibilities under this Contract.

ARTICLE 18
REVIEW OF ENGINEERING SERVICES

Engineer's Engineering Services will be reviewed by County under its applicable technical requirements and procedures.

A. Completion. Reports, plans, specifications, and supporting documents shall be submitted by Engineer on or before the dates specified in the applicable Work Authorization or Supplemental Work Authorization related thereto. Upon receipt of same, the submission shall be checked for completion. "Completion" or "Complete" shall be defined as all of the required items, as set out in the applicable Work Authorization, have been included in compliance with the requirements of this Contract. The completeness of any Engineering Services submitted to County shall be determined by County within thirty (30) days of such submittal and County shall notify Engineer in writing within such thirty (30) day period if such Engineering Services have been found to be incomplete. If the submission is Complete, County shall notify Engineer and County's technical review process will begin.

If the submission is not Complete, County shall notify Engineer, who shall perform such professional services as are required to complete the Engineering Services and resubmit it to County. This process shall be repeated until a submission is Complete.

B. Acceptance. County shall review the completed Engineering Services for compliance with this Contract. If necessary, the completed Engineering Services shall be returned to Engineer, who shall perform any required Engineering Services and resubmit it to County. This process shall be repeated until the Engineering Services are Accepted. "Acceptance" or "Accepted" shall mean that in the County's reasonable opinion, substantial compliance with the requirements of this Contract has been achieved.

C. Final Approval. After Acceptance, Engineer shall perform any required modifications, changes, alterations, corrections, redesigns, and additional work necessary to receive Final Approval by the County. "Final Approval" in this sense shall mean formal recognition that the Engineering Services have been fully carried out.

D. Errors and Omissions. After Final Approval, Engineer shall, without additional compensation, perform any work required as a result of Engineer's development of the work which is found to be in error or omission due to Engineer's negligence. However, any work required or

occasioned for the convenience of County after Final Approval shall be paid for as Additional Engineering Services.

E. Disputes Over Classifications. In the event of any dispute over the classification of Engineer's Engineering Services as Complete, Accepted, or having attained Final Approved under this Contract, the decision of the County shall be final and binding on Engineer, subject to any civil remedy or determination otherwise available to the parties and deemed appropriate by the parties.

F. County's Reliance on Engineer. ENGINEER'S DUTIES AS SET FORTH HEREIN SHALL AT NO TIME BE IN ANY WAY DIMINISHED BY REASON OF ANY REVIEW, EVALUATION OR APPROVAL BY THE COUNTY NOR SHALL THE ENGINEER BE RELEASED FROM ANY LIABILITY BY REASON OF SUCH REVIEW, EVALUATION OR APPROVAL BY THE COUNTY, IT BEING UNDERSTOOD THAT THE COUNTY AT ALL TIMES IS ULTIMATELY RELYING UPON THE ENGINEER'S SKILL, ABILITY AND KNOWLEDGE IN PERFORMING THE ENGINEERING SERVICES REQUIRED HEREUNDER.

ARTICLE 19
VIOLATION OF CONTRACT TERMS/BREACH OF CONTRACT

Violation of contract terms or breach of contract by Engineer shall be grounds for termination of this Contract, and any increased costs arising from Engineer's default, breach of contract, or violation of contract terms shall be paid by Engineer.

ARTICLE 20
TERMINATION

This Contract may be terminated as set forth below.

A. By mutual agreement and consent, in writing, of both parties.

B. By County, by notice in writing to Engineer, as a consequence of failure by Engineer to perform the Engineering Services set forth herein in a satisfactory manner. Engineer shall have 10 days to cure any such failure in performance.

C. By either party, upon the failure of the other party to fulfill its obligations as set forth herein.

D. By County, for reasons of its own and not subject to the mutual consent of Engineer, upon not less than thirty (30) days' written notice to Engineer.

E. By satisfactory completion of all Engineering Services and obligations described herein.

Should County terminate this Contract as herein provided, no fees other than fees due and payable at the time of termination plus reimbursable expenses incurred shall thereafter be paid to Engineer. In determining the value of the Engineering Services performed by Engineer prior to termination, County shall be the sole judge. Compensation for Engineering Services at termination will be based on a percentage of the Engineering Services completed at that time.

Should County terminate this Contract under Subsection (D) immediately above, then the amount charged during the thirty-day notice period shall not exceed the amount charged during the preceding thirty (30) days.

If Engineer defaults in the performance of this Contract or if County terminates this Contract for fault on the part of Engineer, then County shall give consideration to the actual costs incurred by Engineer in performing the Engineering Services to the date of default, the amount of Engineering Services required which was satisfactorily completed to date of default, the value of the Engineering Services which are usable to County, the cost to County of employing another firm to complete the Engineering Services required and the time required to do so, and other factors which affect the value to County of the Engineering Services performed at the time of default.

The termination of this Contract and payment of an amount in settlement as prescribed above shall extinguish all rights, duties, and obligations of County under this Contract. If the termination of this Contract is due to the failure of Engineer to fulfill his/her/its contractual obligations, then County may take over the Project and prosecute the Engineering Services to completion. In such case, Engineer shall be liable to County for any additional and reasonable costs incurred by County.

Engineer shall be responsible for the settlement of all contractual and administrative issues arising out of any procurements made by Engineer in support of the Engineering Services under this Contract.

ARTICLE 21
COMPLIANCE WITH LAWS

A. Compliance. Engineer shall comply with all applicable federal, state and local laws, statutes, codes, ordinances, rules and regulations, and the orders and decrees of any court, or administrative bodies or tribunals in any manner affecting the performance of this Contract, including without limitation, minimum/maximum salary and wage statutes and regulations, and licensing laws and regulations. Engineer shall furnish County with satisfactory proof of his/her/its compliance.

Engineer shall further obtain all permits and licenses required in the performance of the Engineering Services contracted for herein.

B. Taxes. Engineer will pay all taxes, if any, required by law arising by virtue of the Engineering Services performed hereunder. County is qualified for exemption pursuant to the provisions of Section 151.309 of the Texas Limited Sales, Excise, and Use Tax Act.

ARTICLE 22
INDEMNIFICATION

ENGINEER AGREES, TO THE FULLEST EXTENT PERMITTED BY LAW, TO INDEMNIFY AND HOLD THE COUNTY HARMLESS FROM AND AGAINST ANY AND ALL LIABILITIES, LOSSES, PENALTIES,

JUDGMENTS, CLAIMS, LAWSUITS, DAMAGES, COSTS AND EXPENSES, INCLUDING, BUT NOT LIMITED TO, ATTORNEYS' FEES, ("LOSSES") TO THE EXTENT SUCH LOSSES ARE CAUSED BY OR RESULTS FROM A NEGLIGENT ACT OR OMISSION, NEGLIGENCE, OR INTENTIONAL TORT COMMITTED BY ENGINEER, ENGINEER'S EMPLOYEES, AGENTS, OR ANY OTHER PERSON OR ENTITY UNDER CONTRACT WITH ENGINEER INCLUDING, WITHOUT LIMITATION, ENGINEER'S SUBCONSULTANTS, OR ANY OTHER ENTITY OVER WHICH ENGINEER EXERCISES CONTROL.

ENGINEER FURTHER AGREES, TO THE FULLEST EXTENT PERMITTED BY LAW, TO INDEMNIFY AND HOLD THE COUNTY HARMLESS FROM ANY AND ALL LIABILITIES, LOSSES, PENALTIES, JUDGMENTS, CLAIMS, LAWSUITS, DAMAGES, COSTS AND EXPENSES, INCLUDING, BUT NOT LIMITED TO, ATTORNEYS' FEES, ("LOSSES") TO THE EXTENT SUCH LOSSES ARE CAUSED BY OR RESULTS FROM ENGINEER'S FAILURE TO PAY ENGINEER'S EMPLOYEES, SUBCONTRACTORS, SUBCONSULTANTS, OR SUPPLIERS, IN CONNECTION WITH ANY OF THE WORK PERFORMED OR TO BE PERFORMED UNDER THIS CONTRACT BY ENGINEER.

ENGINEER FURTHER AGREES TO INDEMNIFY AND HOLD THE COUNTY HARMLESS FROM ANY AND ALL LIABILITIES, LOSSES, PENALTIES, CLAIMS, LAWSUITS, DAMAGES, COSTS AND EXPENSES, INCLUDING, BUT NOT LIMITED TO, ATTORNEYS' FEES, ("LOSSES") TO THE EXTENT SUCH LOSSES ARE CAUSED BY OR RESULTS FROM THE INFRINGEMENT OF ANY INTELLECTUAL PROPERTY ARISING OUT OF THE USE OF ANY PLANS, DESIGN, DRAWINGS, OR SPECIFICATIONS FURNISHED BY ENGINEER IN THE PERFORMANCE OF THIS CONTRACT.

THE LIMITS OF INSURANCE REQUIRED IN THIS CONTRACT AND/OR THE CONTRACT DOCUMENTS SHALL NOT LIMIT ENGINEER'S OBLIGATIONS UNDER THIS SECTION. THE TERMS AND CONDITIONS CONTAINED IN THIS SECTION SHALL SURVIVE THE TERMINATION OF THE CONTRACT AND/OR CONTRACT DOCUMENTS OR THE SUSPENSION OF THE WORK HEREUNDER. TO THE EXTENT THAT ANY LIABILITIES, PENALTIES, DEMANDS, CLAIMS, LAWSUITS, LOSSES, DAMAGES, COSTS AND EXPENSES ARE CAUSED IN PART BY THE ACTS OF THE COUNTY OR THIRD PARTIES FOR WHOM ENGINEER IS NOT LEGALLY LIABLE, ENGINEER'S OBLIGATIONS SHALL BE IN PROPORTION TO ENGINEER'S FAULT. THE OBLIGATIONS HEREIN SHALL ALSO EXTEND TO ANY ACTIONS BY THE COUNTY TO ENFORCE THIS INDEMNITY OBLIGATION.

IN THE EVENT THAT CONTRACTORS INITIATE LITIGATION AGAINST THE COUNTY IN WHICH THE CONTRACTOR ALLEGES DAMAGES AS A RESULT OF ANY NEGLIGENT ACTS, ERRORS OR OMISSIONS OF ENGINEER, ITS EMPLOYEES, AGENTS, SUBCONTRACTORS, SUBCONSULTANTS, OR SUPPLIERS, OR OTHER ENTITIES OVER WHICH ENGINEER EXERCISES CONTROL, INCLUDING, BUT NOT LIMITED TO, DEFECTS, ERRORS, OR OMISSIONS, THEN THE COUNTY SHALL HAVE THE RIGHT TO JOIN ENGINEER IN ANY SUCH PROCEEDINGS AT THE COUNTY'S COST. ENGINEER SHALL ALSO HOLD THE COUNTY HARMLESS AND INDEMNIFY THE COUNTY TO THE EXTENT THAT ENGINEER, ANY OF ITS EMPLOYEES, AGENTS, SUBCONTRACTORS, SUBCONSULTANTS, OR SUPPLIERS, OR OTHER ENTITIES OVER WHICH ENGINEER EXERCISES CONTROL, CAUSED SUCH DAMAGES TO CONTRACTOR, INCLUDING ANY AND ALL REASONABLE COSTS AND ATTORNEYS' FEES INCURRED BY THE COUNTY IN CONNECTION WITH THE DEFENSE OF ANY CLAIMS WHERE ENGINEER, ITS EMPLOYEES, AGENTS, SUBCONTRACTORS, SUBCONSULTANTS, OR SUPPLIERS, OR OTHER ENTITIES OVER WHICH ENGINEER EXERCISES CONTROL, ARE ADJUDICATED AT FAULT.

ARTICLE 23
ENGINEER'S RESPONSIBILITIES

Engineer shall be responsible for the accuracy of his/her/its Engineering Services and shall promptly make necessary revisions or corrections to its work product resulting from negligent acts, errors, omissions, and same shall be done without compensation. County shall determine Engineer's responsibilities for all questions arising from design errors and/or omissions, subject to the dispute resolution provisions of Article 33. Engineer shall not be relieved of responsibility for subsequent correction of any such negligent errors or omissions in its work product, or for clarification of any ambiguities until after the construction phase of the Project has been completed.

ARTICLE 24
ENGINEER'S SEAL

The responsible engineer shall sign, seal and date all appropriate engineering submissions to County in accordance with the Texas Engineering Practice Act and the rules of the State Board of Registration for Professional Engineers.

ARTICLE 25
INSURANCE

Engineer must comply with the following insurance requirements at all times during this Contract:

A. Coverage Limits. Engineer, at Engineer's sole cost, shall purchase and maintain during the entire term while this Contract is in effect the following insurance:

1. Worker's Compensation in accordance with statutory requirements.
2. Commercial General Liability Insurance with a combined minimum Bodily Injury and Property Damage limits of $1,000,000.00 per occurrence and $2,000,000.00 in the aggregate.
3. Automobile Liability Insurance for all owned, non-owned, and hired vehicles with combined minimum limits for Bodily Injury and Property Damage limits of $500,000.00 per occurrence and $1,000,000.00 in the aggregate.
4. Professional Liability Errors and Omissions Insurance in the amount of $2,000,000.00 per claim and annual aggregate.

B. Additional Insureds; Waiver of Subrogation. County, its directors, officers and employees shall be added as additional insureds under policies listed under (2) and (3) above, and on those policies where County, its directors, officers and employees are additional insureds, such insurance shall be primary and any insurance maintained by County shall be excess and not contribute with it. Such policies shall also include waivers of subrogation in favor of County.

C. Premiums and Deductible. Engineer shall be responsible for payment of

premiums for all of the insurance coverages required under this section. Engineer further agrees that for each claim, suit or action made against insurance provided hereunder, with respect to all matters for which the Engineer is responsible hereunder, Engineer shall be solely responsible for all deductibles and self-insured retentions. Any deductibles or self-insured retentions over $50,000 in the Engineer's insurance must be declared and approved in writing by County in advance.

D. Commencement of Work. Engineer shall not commence any field work under this Contract until he/she/it has obtained all required insurance and such insurance has been approved by County. As further set out below, Engineer shall not allow any subcontractor/subconsultant(s) to commence work to be performed in connection with this Contract until all required insurance has been obtained and approved and such approval shall not be unreasonably withheld. Approval of the insurance by County shall not relieve or decrease the liability of Engineer hereunder.

E. Insurance Company Rating. The required insurance must be written by a company approved to do business in the State or Texas with a financial standing of at least an A-rating, as reflected in Best's insurance ratings or by a similar rating system recognized within the insurance industry at the time the policy is issued.

F. Certification of Coverage. Engineer shall furnish County with a certification of coverage issued by the insurer. Engineer shall not cause any insurance to be canceled nor permit any insurance to lapse. **In addition to any other notification requires set forth hereunder, Engineer shall also notify County, within twenty-four (24) hours of receipt, of any notices of expiration, cancellation, non-renewal, or material change in coverage it receives from its insurer.**

G. No Arbitration. It is the intention of the County and agreed to and hereby acknowledged by the Engineer, that no provision of this Contract shall be construed to require the County to submit to mandatory arbitration in the settlement of any claim, cause of action or dispute, except as specifically required in direct connection with an insurance claim or threat of claim under an insurance policy required hereunder or as may be required by law or a court of law with jurisdiction over the provisions of this Contract.

H. Subcontractor/Subconsultant's Insurance. Without limiting any of the other obligations or liabilities of Engineer, Engineer shall require each subcontractor/subconsultant performing work under this Contract (to the extent a subcontractor/subconsultant is allowed by County) to maintain during the term of this Contract, at the subcontractor/subconsultant's own expense, the same stipulated minimum insurance required in this Article above, including the required provisions and additional policy conditions as shown below in this Article.

Engineer shall obtain and monitor the certificates of insurance from each subcontractor/subconsultant in order to assure compliance with the insurance requirements. Engineer must retain the certificates of insurance for the duration of this Contract, and shall have the responsibility of enforcing these insurance requirements among its subcontractor/subconsultants. County shall be entitled, upon request and without expense, to

receive copies of these certificates of insurance.

I. Insurance Policy Endorsements. Each insurance policy shall include the following conditions by endorsement to the policy:

1. County shall be notified thirty (30) days prior to the expiration, cancellation, non-renewal or any material change in coverage, and such notice thereof shall be given to County by certified mail to:

   Hays County Auditor
   c/o: Vickie G. Dorsett
   712 S. Stagecoach Trail, Suite 1071
   San Marcos, Texas 78666

   With copy to: HNTB Corporation
   Attn: Michael Weaver
   701 Brazos, Suite 450
   Austin, Texas 78701

2. The policy clause "Other Insurance" shall not apply to any insurance coverage currently held by County, to any such future coverage, or to County's Self-Insured Retentions of whatever nature.

J. Cost of Insurance. The cost of all insurance required herein to be secured and maintained by Engineer shall be borne solely by Engineer, with certificates of insurance evidencing such minimum coverage in force to be filed with County. Such Certificates of Insurance are evidenced as **Exhibit F** herein entitled "Certificates of Insurance."

ARTICLE 26
COPYRIGHTS

County shall have the royalty-free, nonexclusive and irrevocable right to reproduce, publish or otherwise use, and to authorize others to use, any reports developed by Engineer for governmental purposes.

ARTICLE 27
SUCCESSORS AND ASSIGNS

This Contract shall be binding upon and inure to the benefit of the parties hereto, their successors, lawful assigns, and legal representatives. Engineer may not assign, sublet or transfer any interest in this Contract, in whole or in part, by operation of law or otherwise, without obtaining the prior written consent of County.

ARTICLE 28
SEVERABILITY

In the event any one or more of the provisions contained in this Contract shall for any reason be held to be invalid, illegal or unenforceable in any respect, then such invalidity, illegality or unenforceability shall not affect any other provision thereof and this Contract shall be construed as if such invalid, illegal or unenforceable provision had never been contained herein.

ARTICLE 29
PRIOR AGREEMENTS SUPERSEDED

This Contract constitutes the sole agreement of the parties hereto, and supersedes any prior understandings or written or oral contracts between the parties respecting the subject matter defined herein. This Contract may only be amended or supplemented by mutual agreement of the parties hereto in writing.

ARTICLE 30
ENGINEER'S ACCOUNTING RECORDS

Engineer agrees to maintain, for a period of three (3) years after final payment under this Contract, detailed records identifying each individual performing the Engineering Services, the date or dates the services were performed, the applicable hourly rates, the total amount billed for each individual and the total amount billed for all persons, records of reimbursable costs and expenses of other providers and provide such other details as may be requested by the County Auditor for verification purposes. Engineer agrees that County or its duly authorized representatives shall, until the expiration of three (3) years after final payment under this Contract, have access to and the right to examine and photocopy any and all books, documents, papers and records of Engineer which are directly pertinent to the services to be performed under this Contract for the purposes of making audits, examinations, excerpts, and transcriptions. Engineer further agrees that County shall have access during normal working hours to all necessary Engineer facilities and shall be provided adequate and appropriate work space in order to conduct audits in compliance with the provisions of this section. County shall give Engineer reasonable advance notice of intended audits.

ARTICLE 31
NOTICES

All notices to either party by the other required under this Contract shall be personally delivered or mailed to such party at the following respective addresses:

County: Hays County Judge
111 E. San Antonio Street, Suite 300
San Marcos, Texas 78666

With copy to: HNTB Corporation
701 Brazos, Suite 450
Austin, Texas 78701
Attn: Michael Weaver

and to: Office of General Counsel
Hays County
111 E. San Antonio Street, Room 202
San Marcos, Texas 78666

Engineer: HNTB Corporation
701 Brazos, Suite 450
Austin, Texas 78701
Attn: Michelle Dippel

ARTICLE 32
GENERAL PROVISIONS

A. Time is of the Essence. Subject to Article 3 hereof, Engineer understands and agrees that time is of the essence and that any failure of Engineer to complete the Engineering Services for each phase of this Contract within the Standard of Performance and agreed work schedule set out in the applicable Work Authorization may constitute a material breach of this Contract. Engineer shall be fully responsible for his/her/its delays or for failures to use his/her/its reasonable efforts in accordance with the terms of this Contract and the Engineer's standard of performance as defined herein. Where damage is caused to County due to Engineer's negligent failure to perform County may accordingly withhold, to the extent of such damage, Engineer's payments hereunder without waiver of any of County's additional legal rights or remedies.

B. Force Majeure. Neither County nor Engineer shall be deemed in violation of this Contract if prevented from performing any of their obligations hereunder by reasons for which they are not responsible or circumstances beyond their control. However, notice of such impediment or delay in performance must be timely given, and all reasonable efforts undertaken to mitigate its effects.

C. Enforcement and Venue. This Contract shall be enforceable in San Marcos, Hays County, Texas, and if legal action is necessary by either party with respect to the enforcement of any or all of the terms or conditions herein, exclusive venue for same shall lie in Hays County, Texas. This Contract shall be governed by and construed in accordance with the laws and court decisions of the State of Texas excluding, however, its choice of law rules.

D. Standard of Performance. The standard of care for all professional engineering, consulting and related services performed or furnished by Engineer and its employees under this Contract will be the care and skill ordinarily used by members of Engineer's profession practicing

under the same or similar circumstances at the same time and in the same locality.

E. Opinion of Probable Cost. Any opinions of probable Project cost or probable construction cost provided by Engineer are made on the basis of information available to Engineer and on the basis of Engineer's experience and qualifications and represents its judgment as an experienced and qualified professional engineer. However, since Engineer has no control over the cost of labor, materials, equipment or services furnished by others, or over the contractor(s') methods of determining prices, or over competitive bidding or market conditions, Engineer does not guarantee that proposals, bids or actual Project or construction cost will not vary from opinions of probable cost Engineer prepares.

F. Opinions and Determinations. Where the terms of this Contract provide for action to be based upon opinion, judgment, approval, review, or determination of either party hereto, such terms are not intended to be and shall never be construed as permitting such opinion, judgment, approval, review, or determination to be arbitrary, capricious, or unreasonable.

G. Reports of Accidents. Within 24 hours after Engineer becomes aware of the occurrence of any accident or other event which results in, or might result in, injury to the person or property of any third person (other than an employee of the Engineer), whether or not it results from or involves any action or failure to act by the Engineer or any employee or agent of the Engineer and which arises in any manner from the performance of this Contract, the Engineer shall send a written report of such accident or other event to the County, setting forth a full and concise statement of the facts pertaining thereto. The Engineer shall also immediately send the County a copy of any summons, subpoena, notice, or other documents served upon the Engineer, its agents, employees, or representatives, or received by it or them, in connection with any matter before any court arising in any manner from the Engineer's performance of work under this Contract.

H. Gender, Number and Headings. Words of any gender used in this Contract shall be held and construed to include any other gender, and words in the singular number shall be held to include the plural, unless the context otherwise requires. The headings and section numbers are for convenience only and shall not be considered in interpreting or construing this Contract.

I. Construction. Each party hereto acknowledges that it and its counsel have reviewed this Contract and that the normal rules of construction are not applicable and there will be no presumption that any ambiguities will be resolved against the drafting party in the interpretation of this Contract.

J. Independent Contractor Relationship. Both parties hereto, in the performance of this Contract, shall act in an individual capacity and not as agents, employees, partners, joint ventures or associates of one another. The employees or agents of one party shall not be deemed or construed to be the employees or agents of the other party for any purposes whatsoever.

K. No Waiver of Immunities. Nothing in this Contract shall be deemed to waive, modify or amend any legal defense available at law or in equity to County, its past or present officers, employees, or agents or employees, nor to create any legal rights or claim on behalf of

any third party. County does not waive, modify, or alter to any extent whatsoever the availability of the defense of governmental immunity under the laws of the State of Texas and of the United States.

L. Texas Public Information Act. To the extent, if any, that any provision in this Contract is in conflict with Tex. Gov't Code 552.001 et seq., as amended (the "Public Information Act"), the same shall be of no force or effect. Furthermore, it is expressly understood and agreed that County, its officers and employees may request advice, decisions and opinions of the Attorney General of the State of Texas in regard to the application of the Public Information Act to any items or data furnished to County as to whether or not the same are available to the public. It is further understood that County's officers and employees shall have the right to rely on the advice, decisions and opinions of the Attorney General, and that County, its officers and employees shall have no liability or obligation to any party hereto for the disclosure to the public, or to any person or persons, of any items or data furnished to County by a party hereto, in reliance of any advice, decision or opinion of the Attorney General of the State of Texas.

M. Governing Terms and Conditions. If there is an irreconcilable conflict between the terms and conditions set forth in this Contract or any Contract Amendment and the terms and conditions set forth in any Exhibit, Appendix, Work Authorization or Supplemental Work Authorization to this Contract, the terms and conditions set forth in this Contract or any Contract Amendment shall control over the terms and conditions set forth in any Exhibit, Appendix, Work Authorization or Supplemental Work Authorization to this Contract.

N. Meaning of Day. For purposes of this Contract, all references to a "day" or "days" shall mean a calendar day or calendar days.

O. Appropriation of Funds by County. County believes it has sufficient funds currently available and authorized for expenditure to finance the costs of this Contract. Engineer understands and agrees that County's payment of amounts under this Contract is contingent on the County receiving appropriations or other expenditure authority sufficient to allow the County, in the exercise of reasonable administrative discretion, to continue to make payments under this Contract. It is further understood and agreed by Engineer that County shall have the right to terminate this Contract at the end of any County fiscal year if the governing body of County does not appropriate sufficient funds as determined by County's budget for the fiscal year in question. County may effect such termination by giving written notice of termination to Engineer.

ARTICLE 33
DISPUTE RESOLUTION

Except as otherwise specifically set forth herein, County and Engineer shall work together in good faith to resolve any controversy, dispute or claim between them which arises out of or relates to this Contract, whether stated in tort, contract, statute, claim for benefits, bad faith, professional liability or otherwise ("Claim"). If the parties are unable to resolve the Claim within thirty (30) days following the date in which one party sent written notice of the Claim to the other party, and if a party wishes to pursue the Claim, such Claim shall be addressed through non-binding mediation. A single mediator engaged in the practice of law, who is knowledgeable about subject matter of this Contract, shall be selected by agreement of the parties and serve as the mediator.

Any mediation under this Contract shall be conducted in Hays County, Texas. The mediator's fees shall be borne equally between the parties. Such non-binding mediation is a condition precedent to seeking redress in a court of competent jurisdiction, but this provision shall not preclude either party from filing a lawsuit in a court of competent jurisdiction prior to completing a mediation if necessary to preserve the statute of limitations, in which case such lawsuit shall be stayed pending completion of the mediation process contemplated herein. This provision shall survive the termination of the Contract.

ARTICLE 34
EQUAL OPPORTUNITY IN EMPLOYMENT

During the performance of this Contract and to the extent the Project is a federally funded project, Engineer, for itself, its assignees and successors in interest agrees as follows:

A. Compliance with Regulations. The Engineer shall comply with the Regulations relative to nondiscrimination in Federally-assisted programs of the Department of Transportation (hereinafter, "DOT") Title 49, Code of Federal Regulations, Part 21, as they may be amended from time to time, (hereinafter referred to as the Regulations), which are herein incorporated by reference and made a part of this Contract.

B. Nondiscrimination. The Engineer, with regard to the work performed by it during the Contract, shall not discriminate on the grounds of race, color, or national origin in the selection and retention of subcontractors/subconsultants, including procurements of materials and leases of equipment. The Engineer shall not participate either directly or indirectly in the discrimination prohibited by section 21.5 of the Regulations, including employment practices when the contract covers a program set forth in Appendix B of the Regulations.

C. Solicitations for Subcontracts, Including Procurements of Materials and Equipment. In all solicitations either by competitive bidding or negotiation made by the Engineer for work to be performed under a subcontract, including procurements of materials or leases of equipment, each potential subcontractor/subconsultant or supplier shall be notified by the Engineer of the Engineer's obligations under this Contract and the Regulations relative to nondiscrimination on the grounds of race, color, or national origin.

D. Information and Reports. The Engineer shall provide all information and reports required by the Regulations or directives issued pursuant thereto, and shall permit access to its books, records, accounts, other sources of information, and its facilities as may be determined by the County (referred to in this Article as the "Recipient") or the Texas Department of Transportation to be pertinent to ascertain compliance with such Regulations, orders and instructions. Where any information required of a contractor is in the exclusive possession of another who fails or refuses to furnish this information the Engineer shall so certify to the Recipient, or the Texas Department of Transportation as appropriate, and shall set forth what efforts it has made to obtain the information.

E. Sanctions for Noncompliance. In the event of the Engineer's noncompliance with the nondiscrimination provisions of this contract, the Recipient shall impose such contract

sanctions as it or the Texas Department of Transportation may determine to be appropriate, including, but not limited to:

1. withholding of payments to the Engineer under the contract until the Engineer complies, and/or;
2. cancellation, termination or suspension of the Contract, in whole or in part.

F. Incorporation of Provisions. The Engineer shall include the provisions of Subsections (A) through (F) above in every subcontract, including procurements of materials and leases of equipment, unless exempt by the Regulations, or directives issued pursuant thereto. The Engineer shall take such action with respect to any subcontract or procurement as the Recipient or the Texas Department of Transportation may direct as a means of enforcing such provisions including sanctions for non-compliance: Provided, however, that, in the event a contractor becomes involved in, or is threatened with, litigation with a subcontractor/subconsultant or supplier as a result of such direction, the Engineer may request the Recipient to enter into such litigation to protect the interests of the Recipient, and, in addition, the Engineer may request the United States to enter into such litigation to protect the interests of the United States.

SIGNATORY WARRANTY

The undersigned signatory for Engineer hereby represents and warrants that the signatory is an officer of the organization for which he/she has executed this Contract and that he/she has full and complete authority to enter into this Contract on behalf of the firm. The above-stated representations and warranties are made for the purpose of inducing County to enter into this Contract.

IN WITNESS WHEREOF, County has caused this Contract to be signed in its name by its duly authorized County Judge, as has Engineer, signing by and through its duly authorized representative(s), thereby binding the parties hereto, their successors, assigns and representatives for the faithful and full performance of the terms and provisions hereof, to be effective as of the date of the last party's execution below. NO OFFICIAL, EMPLOYEE, AGENT, OR REPRESENTATIVE OF THE COUNTY HAS ANY AUTHORITY, EITHER EXPRESS OR IMPLIED, TO AMEND, TERMINATE OR MODIFY THIS CONTRACT, EXCEPT PURSUANT TO SUCH EXPRESS AUTHORITY AS MAY BE GRANTED BY THE HAYS COUNTY COMMISSIONERS COURT.

COUNTY

HAYS COUNTY, TEXAS

By: _____
Ruben Becerra, County Judge

Date: _____ ____, 20_____

06/09/2020

ENGINEER

HNTB Corporation

By DocuSigned by: Michelle Dippel DA5206102E25426...

Printed Name: Michelle Dippel

Title: Vice President

Date: 6/2/2020

LIST OF EXHIBITS ATTACHED

(1) **Exhibit A** Debarment Certification

(2) **Exhibit B** Engineering Services

(3) **Exhibit C** Work Authorization

(4) **Exhibit D** Rate Schedule

(5) **Exhibit E** Certificates of Insurance

EXHIBIT A
DEBARMENT CERTIFICATION

STATE OF TEXAS §
§
COUNTY OF HAYS §

I, the undersigned, being duly sworn or under penalty of perjury under the laws of the United States and the State of Texas, certifies that Engineer and its principals:

(a) Are not presently debarred, suspended, proposed for debarment, declared ineligible or voluntarily excluded from covered transactions by any federal department or agency:

(b) Have not within a three-year period preceding this proposal been convicted of or had a civil judgment rendered against them for commission of fraud or a criminal offense in connection with obtaining, attempting to obtain, or performing a public* transaction or contract under a public transaction; violation of federal or state antitrust statutes or commission of embezzlement, theft, forgery, bribery, falsification or destruction of records, making false statements, or receiving stolen property;

(c) Are not presently indicted for or otherwise criminally or civilly charged by a governmental entity* with commission of any of the offenses enumerated in paragraph (1)(b) of this certification;

(d) Have not within a three-year period preceding this application/proposal had one or more public transactions* terminated for cause or default; and

(e) Have not been disciplined or issued a formal reprimand by any State agency for professional accreditation within the past three years.

HNTB Corporation
Name of Firm

Signature of Certifying Official

Michelle Dippel
Printed Name of Certifying Official

Vice-President
Title of Certifying Official

June , 1 2020
Date

(2) Where the PROVIDER is unable to certify to any of the statements in this certification, such PROVIDER shall attach an explanation to this certification.

* federal, state, or local

SUBSCRIBED and sworn to before me the undersigned authority by Michelle Dippel the Vice-President of HNTB Corporation, on behalf of said firm.

JACQUELYN WEIGHT FITZPATRICK
Notary ID #125893933
My Commission Expires
October 27, 2022

Jacquelyn Weight Fitzpatrick
Notary Public in and for the
State of Texas

My commission expires: October 27, 2022

EXHIBITB

ENGINEERING SERVICES

Project Limits

From Union Pacific Railroad Milepost (UPRR MP) 198.02 to UPRR MP 201.77

- Existing facilities to be decommissioned: MP 200.20 to MP 201.77
- Proposed facilities to be constructed: MP 198.02 to MP 200.21

General Work Description: Provide environmental services to develop Kyle Union Pacific Railroad (UPRR) Siding through downtown Kyle. UPRR MP 200.20 to UPRR MP 201.77 is being decommissioned and replaced. The proposed siding will cross FM 1626 and FM 171 (Kohler's Crossing).

The Engineer will perform the following tasks listed below, as described in detail in each Work Authorization. Additional UPRR ROW is required at various locations throughout the project limits, including additional UPRR ROW from the FM 1626 and the FM 171 rights-of-way. The intent of this scope is to secure environmental clearance for the proposed rights of way along the project corridor and the proposed connections TxDOT right of way.

This scope of work is limited to environmental services and public involvement. All other discipline plan sheets will be performed under separate contract,

Environmental Services

Public Involvement

Additional Services as Requested through Executed Work Authorizations/Supplements

EXHIBIT C

WORK AUTHORIZATION

(To Be Completed and Executed After Contract Execution)

WORK AUTHORIZATION NO. _____
PROJECT: _____

This Work Authorization is made pursuant to the terms and conditions of the Hays County Contract for Engineering Services, being dated _____ ____, 20____ and entered into by and between Hays County, Texas, a political subdivision of the State of Texas, (the "County") and _____ (the "Engineer").

Part1. The Engineer will provide the following Engineering Services set forth in Attachment "B" of this Work Authorization.

Part 2. The maximum amount payable for services under this Work Authorization without modification is _____.

Part 3. Payment to the Engineer for the services established under this Work Authorization shall be made in accordance with the Contract.

Part 4. This Work Authorization shall become effective on the date of final acceptance and full execution of the parties hereto and shall terminate on _____ ____, 20_____. The Engineering Services set forth in Attachment "B" of this Work Authorization shall be fully completed on or before said date unless extended by a Supplemental Work Authorization.

Part 5. This Work Authorization does not waive the parties' responsibilities and obligations provided under the Contract.

Part 6. County believes it has sufficient funds currently available and authorized for expenditure to finance the costs of this Work Authorization. Engineer understands and agrees that County's payment of amounts under this Work Authorization is contingent on the County receiving appropriations or other expenditure authority sufficient to allow the County, in the exercise of reasonable administrative discretion, to continue to make payments under this Contract. It is further understood and agreed by Engineer that County shall have the right to terminate this Contract at the end of any County fiscal year if the governing body of County does not appropriate sufficient funds as determined by County's budget for the fiscal year in question. County may effect such termination by giving written notice of termination to Engineer.

Part 7. This Work Authorization is hereby accepted and acknowledged below.

EXECUTED this ____ day of _____, 20___.

ENGINEER:	COUNTY:
[Insert Company Name HERE]	Hays County, Texas
By:_____	By:_____
Signature	Signature
_____	_____
Printed Name	Printed Name
_____	_____
Title	Title

LIST OF ATTACHMENTS

Attachment A - Services to be Provided by County

Attachment B - Services to be Provided by Engineer

Attachment C - Work Schedule

Attachment D - Fee Schedule

EXHIBIT D

Fee/Rate Schedule

FEE SCHEDULE SHALL BE INSERTED AT THE TIME OF AGREEMENT/CONTRACT EXECUTION

EXHIBIT E

CERTIFICATES OF INSURANCE

ATTACHED BEHIND THIS PAGE

CERTIFICATE OF LIABILITY INSURANCE

DATE (MM/DD/YYYY) 05/29/2020

THIS CERTIFICATE IS ISSUED AS A MATTER OF INFORMATION ONLY AND CONFERS NO RIGHTS UPON THE CERTIFICATE HOLDER. THIS CERTIFICATE DOES NOT AFFIRMATIVELY OR NEGATIVELY AMEND, EXTEND OR ALTER THE COVERAGE AFFORDED BY THE POLICIES BELOW. THIS CERTIFICATE OF INSURANCE DOES NOT CONSTITUTE A CONTRACT BETWEEN THE ISSUING INSURER(S), AUTHORIZED REPRESENTATIVE OR PRODUCER, AND THE CERTIFICATE HOLDER.

IMPORTANT: If the certificate holder is an ADDITIONAL INSURED, the policy(ies) must have ADDITIONAL INSURED provisions or be endorsed. If SUBROGATION IS WAIVED, subject to the terms and conditions of the policy, certain policies may require an endorsement. A statement on this certificate does not confer rights to the certificate holder in lieu of such endorsement(s).

PRODUCER		CONTACT NAME: Business Insurance Manager	
IMA, Inc. 1-913-982-3650		PHONE (A/C, No, Ext): 816-527-2511	FAX (A/C, No): 816-472-4060
51 Corporate Woods 9393 W. 110th Street, Suite 600 Overland Park, KS 66210		E-MAIL ADDRESS: businessinsurancemgr@hntb.com	
		INSURER(S) AFFORDING COVERAGE	NAIC #
		INSURER A : ZURICH AMER INS CO	16535
INSURED HNTB Corporation 701 Brazos, Suite 450 Austin, TX 78701		INSURER B :	
		INSURER C :	
		INSURER D :	
		INSURER E :	
		INSURER F :	

COVERAGES **CERTIFICATE NUMBER:** 59359474 **REVISION NUMBER:**

THIS IS TO CERTIFY THAT THE POLICIES OF INSURANCE LISTED BELOW HAVE BEEN ISSUED TO THE INSURED NAMED ABOVE FOR THE POLICY PERIOD INDICATED. NOTWITHSTANDING ANY REQUIREMENT, TERM OR CONDITION OF ANY CONTRACT OR OTHER DOCUMENT WITH RESPECT TO WHICH THIS CERTIFICATE MAY BE ISSUED OR MAY PERTAIN, THE INSURANCE AFFORDED BY THE POLICIES DESCRIBED HEREIN IS SUBJECT TO ALL THE TERMS, EXCLUSIONS AND CONDITIONS OF SUCH POLICIES. LIMITS SHOWN MAY HAVE BEEN REDUCED BY PAID CLAIMS.

INSR LTR	TYPE OF INSURANCE	ADDL INSD	SUBR WVD	POLICY NUMBER	POLICY EFF (MM/DD/YYYY)	POLICY EXP (MM/DD/YYYY)	LIMITS	
A	X COMMERCIAL GENERAL LIABILITY			GLO 0769451-00	01/01/20	01/01/21	EACH OCCURRENCE	$ 2,000,000
	CLAIMS-MADE X OCCUR						DAMAGE TO RENTED PREMISES (Ea occurrence)	$ 1,000,000
							MED EXP (Any one person)	$ 10,000
							PERSONAL & ADV INJURY	$ 2,000,000
	GEN'L AGGREGATE LIMIT APPLIES PER:						GENERAL AGGREGATE	$ 4,000,000
	POLICY X PRO-JECT X LOC						PRODUCTS - COMP/OP AGG	$ 4,000,000
	OTHER:							$
A	AUTOMOBILE LIABILITY			BAP 0769452-00	01/01/20	01/01/21	COMBINED SINGLE LIMIT (Ea accident)	$ 2,000,000
	X ANY AUTO						BODILY INJURY (Per person)	$
	OWNED AUTOS ONLY / SCHEDULED AUTOS						BODILY INJURY (Per accident)	$
	HIRED AUTOS ONLY / NON-OWNED AUTOS ONLY						PROPERTY DAMAGE (Per accident)	$
								$
	UMBRELLA LIAB / OCCUR						EACH OCCURRENCE	$
	EXCESS LIAB / CLAIMS-MADE						AGGREGATE	$
	DED / RETENTION $							$
A	WORKERS COMPENSATION AND EMPLOYERS' LIABILITY ANYPROPRIETOR/PARTNER/EXECUTIVE OFFICER/MEMBER EXCLUDED? Y / N: N (Mandatory in NH) If yes, describe under DESCRIPTION OF OPERATIONS below	N / A		WC 0769453-00	01/01/20	01/01/21	X PER STATUTE / OTH-ER	
							E.L. EACH ACCIDENT	$ 1,000,000
							E.L. DISEASE - EA EMPLOYEE	$ 1,000,000
							E.L. DISEASE - POLICY LIMIT	$ 1,000,000

DESCRIPTION OF OPERATIONS / LOCATIONS / VEHICLES (ACORD 101, Additional Remarks Schedule, may be attached if more space is required)

HNTB Job #78457; Kyle UPRR Siding - Additional Professional Engineering Services
If required by written contract, Hays County, Texas, its directors, officers and employees are Additional Insureds as respects General and Auto Liability subject to the terms, conditions and exclusions of the policies, which shall be considered primary and non-contributory. If required by a written contract, Waiver of Subrogation applies, subject to policy terms and conditions. Insurer will provide 30 days' notice of cancellation, for reasons other than non-payment of premium. Deductibles: GL is $0.00 and AL is $100K.

CERTIFICATE HOLDER	CANCELLATION
Office #134 HNTB Job #78457 Hays County, Texas 111 E. San Antonio Street, Suite 300 San Marcos, TX 78666 USA	SHOULD ANY OF THE ABOVE DESCRIBED POLICIES BE CANCELLED BEFORE THE EXPIRATION DATE THEREOF, NOTICE WILL BE DELIVERED IN ACCORDANCE WITH THE POLICY PROVISIONS. AUTHORIZED REPRESENTATIVE

© 1988-2015 ACORD CORPORATION. All rights reserved.

CERTIFICATE OF LIABILITY INSURANCE

5/1/2021

DATE (MM/DD/YYYY) 5/29/2020

THIS CERTIFICATE IS ISSUED AS A MATTER OF INFORMATION ONLY AND CONFERS NO RIGHTS UPON THE CERTIFICATE HOLDER. THIS CERTIFICATE DOES NOT AFFIRMATIVELY OR NEGATIVELY AMEND, EXTEND OR ALTER THE COVERAGE AFFORDED BY THE POLICIES BELOW. THIS CERTIFICATE OF INSURANCE DOES NOT CONSTITUTE A CONTRACT BETWEEN THE ISSUING INSURER(S), AUTHORIZED REPRESENTATIVE OR PRODUCER, AND THE CERTIFICATE HOLDER.

IMPORTANT: If the certificate holder is an ADDITIONAL INSURED, the policy(ies) must have ADDITIONAL INSURED provisions or be endorsed. If SUBROGATION IS WAIVED, subject to the terms and conditions of the policy, certain policies may require an endorsement. A statement on this certificate does not confer rights to the certificate holder in lieu of such endorsement(s).

PRODUCER Lockton Companies 444 W. 47th Street, Suite 900 Kansas City MO 64112-1906 (816) 960-9000	CONTACT NAME: PHONE (A/C, No, Ext): FAX (A/C, No): E-MAIL ADDRESS:
	INSURER(S) AFFORDING COVERAGE — NAIC #
	INSURER A : Lexington Insurance Company — 19437
INSURED 1445095 HNTB CORPORATION 701 BRAZOS, SUITE 450 AUSTIN TX 78701	INSURER B :
	INSURER C :
	INSURER D :
	INSURER E :
	INSURER F :

COVERAGES **CERTIFICATE NUMBER:** 16773624 **REVISION NUMBER:** XXXXXXX

THIS IS TO CERTIFY THAT THE POLICIES OF INSURANCE LISTED BELOW HAVE BEEN ISSUED TO THE INSURED NAMED ABOVE FOR THE POLICY PERIOD INDICATED. NOTWITHSTANDING ANY REQUIREMENT, TERM OR CONDITION OF ANY CONTRACT OR OTHER DOCUMENT WITH RESPECT TO WHICH THIS CERTIFICATE MAY BE ISSUED OR MAY PERTAIN, THE INSURANCE AFFORDED BY THE POLICIES DESCRIBED HEREIN IS SUBJECT TO ALL THE TERMS, EXCLUSIONS AND CONDITIONS OF SUCH POLICIES. LIMITS SHOWN MAY HAVE BEEN REDUCED BY PAID CLAIMS.

INSR LTR	TYPE OF INSURANCE	ADDL INSD	SUBR WVD	POLICY NUMBER	POLICY EFF (MM/DD/YYYY)	POLICY EXP (MM/DD/YYYY)	LIMITS	
	COMMERCIAL GENERAL LIABILITY CLAIMS-MADE OCCUR GEN'L AGGREGATE LIMIT APPLIES PER: POLICY PRO-JECT LOC OTHER:			NOT APPLICABLE			EACH OCCURRENCE	$ XXXXXXX
							DAMAGE TO RENTED PREMISES (Ea occurrence)	$ XXXXXXX
							MED EXP (Any one person)	$ XXXXXXX
							PERSONAL & ADV INJURY	$ XXXXXXX
							GENERAL AGGREGATE	$ XXXXXXX
							PRODUCTS - COMP/OP AGG	$ XXXXXXX
								$
	AUTOMOBILE LIABILITY ANY AUTO OWNED AUTOS ONLY SCHEDULED AUTOS HIRED AUTOS ONLY NON-OWNED AUTOS ONLY			NOT APPLICABLE			COMBINED SINGLE LIMIT (Ea accident)	$ XXXXXXX
							BODILY INJURY (Per person)	$ XXXXXXX
							BODILY INJURY (Per accident)	$ XXXXXXX
							PROPERTY DAMAGE (Per accident)	$ XXXXXXX
								$ XXXXXXX
	UMBRELLA LIAB OCCUR EXCESS LIAB CLAIMS-MADE DED RETENTION $			NOT APPLICABLE			EACH OCCURRENCE	$ XXXXXXX
							AGGREGATE	$ XXXXXXX
								$ XXXXXXX
	WORKERS COMPENSATION AND EMPLOYERS' LIABILITY ANY PROPRIETOR/PARTNER/EXECUTIVE OFFICER/MEMBER EXCLUDED? Y / N (Mandatory in NH) If yes, describe under DESCRIPTION OF OPERATIONS below	N / A		NOT APPLICABLE			PER STATUTE OTH-ER	
							E.L. EACH ACCIDENT	$ XXXXXXX
							E.L. DISEASE - EA EMPLOYEE	$ XXXXXXX
							E.L. DISEASE - POLICY LIMIT	$ XXXXXXX
A	PROFESSIONAL LIABILITY	N	Y	061853762	5/1/2020	5/1/2021	$2,000,000 PER CLAIM/ ANNUAL AGGREGATE	

DESCRIPTION OF OPERATIONS / LOCATIONS / VEHICLES (ACORD 101, Additional Remarks Schedule, may be attached if more space is required)

HNTB JOB #78457; KYLE UPRR SIDING – ADDITIONAL PROFESSIONAL ENGINEERING SERVICES. WAIVER OF SUBROGATION APPLIES TO PROFESSIONAL LIABILITY, WHERE ALLOWED BY STATE LAW AND IF REQUIRED BY WRITTEN CONTRACT. PROFESSIONAL LIABILITY SIR: $50,000.

CERTIFICATE HOLDER

16773624
HAYS COUNTY, TEXAS
111 E. SAN ANTONIO STREET, SUITE 300
SAN MARCOS TX 78666

CANCELLATION See Attachment

SHOULD ANY OF THE ABOVE DESCRIBED POLICIES BE CANCELLED BEFORE THE EXPIRATION DATE THEREOF, NOTICE WILL BE DELIVERED IN ACCORDANCE WITH THE POLICY PROVISIONS.

AUTHORIZED REPRESENTATIVE

Joseph M Agnello

© 1988-2015 ACORD CORPORATION. All rights reserved.

CODE OF ETHICS FOR HAYS COUNTY

Public employment is a public trust. It is the policy of Hays County to promote and balance the objective of protecting government integrity and the objective of facilitating the recruitment and retention of personnel needed by Hays County. Such a policy implemented by prescribing essential standards of ethical conduct without creating unnecessary obstacles to entering public services.

Public servants must discharge their duties impartially so as to assure fair competitive access to governmental procurement by responsible contractors. Moreover, they should conduct themselves in such a manner as to foster public confidence in the integrity of the Hays County procurement organization.

To achieve the purpose of this article, it is essential that those doing business with Hays County also observe the ethical standards prescribed here.

1. It shall be a breach of ethics to attempt to influence any public employee, elected official or department head to breach the standards of ethical conduct set forth in this code.

2. It shall be a breach of ethics for any employee of Hays County or a vendor doing business with the county to participate directly or indirectly in a procurement when the employee or vendor knows that:

   A. The employee or any member of the employee's immediate family, or household has a substantial financial interest pertaining to the procurement. This means ownership of 10% or more of the company involved and/or ownership of stock or other interest or such valued at $2500.00 or more.

   B. A business or organization in which the employee, or any member of the employee's immediate family, has a financial interest pertaining to the procurement.

   C. Gratuities: It shall be a breach of ethics to offer, give or agree to give any employee of Hays County or for any employee to solicit, demand, accept or agree to accept from a vendor, a gratuity of consequence or any offer of employment in connection with any decision approval, disapproval, recommendation, preparation or any part of a program requirement or purchase request influencing the content of any specification or procurement standard, rendering of advice, investigation, auditing, or in any other advisory capacity in any proceeding or controversy, any particular matter pertaining to any program requirement or a contract or subcontract, or to any solicitation or proposal therefore pending before this government.

D. Kickbacks: It shall be a breach of ethics for any payment, gratuity or offer of employment to be made by or on behalf of a subcontractor under a contract to the prime contractor or higher tier subcontractor for any contract for Hays County as an inducement for the award of a contract or order.

E. Contract Clause: The prohibition against gratuities and kickbacks prescribed above shall be conspicuously set forth in every contract and solicitation therefore.

F. Any effort to influence any employee, elected official, or department head to violate the standards of the code is grounds to void the contract. Please certify, by your signature below, that you understand the ethics policy of Hays County and in no way will attempt to violate the code.

SIGNATURE: DocuSigned by: Michelle Dippel DA5206102E25426...

PRINT NAME & TITLE: Michelle Dippel -Vice President

COMPANY NAME: HNTB Corporation

CERTIFICATE OF INTERESTED PARTIES

FORM 1295

Complete Nos. 1 - 4 and 6 if there are interested parties.
Complete Nos. 1, 2, 3, 5, and 6 if there are no interested parties.

OFFICE USE ONLY
CERTIFICATION OF FILING

Certificate Number:
2020-624428

Date Filed:
05/27/2020

Date Acknowledged:

1 Name of business entity filing form, and the city, state and country of the business entity's place of business.

HNTB Corporation
Austin, TX United States

2 Name of governmental entity or state agency that is a party to the contract for which the form is being filed.

Hays County, Texas

3 Provide the identification number used by the governmental entity or state agency to track or identify the contract, and provide a description of the services, goods, or other property to be provided under the contract.

Hays County Kyle UPRR Siding
Additional Professional Engineering Services (Kyle UPRR Siding) - Additional Services

4 Name of Interested Party	City, State, Country (place of business)	Nature of interest (check applicable)	
		Controlling	Intermediary
Slimp, Robert J.	Kansas City, MO United States	X	
Yarossi, Paul A.	Kansas City, MO United States	X	
Hammond, Jr., Harvey K.	Kansas City, MO United States	X	
Stuart, Toby	Oakland, CA United States	X	
Brzezinski, Francis	Waukesha, WI United States	X	
Mann, Dougal L.	Kansas City, MO United States	X	
O'Grady, Thomas D.	Kansas City, MO United States	X	

5 Check only if there is NO Interested Party. ☐

6 UNSWORN DECLARATION

My name is Michelle Dippel, and my date of birth is October 14, 1969.

My address is 701 Brazos, Suite 450 (street), Austin (city), TX (state), 78701 (zip code), USA (country).

I declare under penalty of perjury that the foregoing is true and correct.

Executed in Travis County, State of Texas, on the 28th day of May (month), 20 20 (year).

DocuSigned by:
Michelle Dippel
DA5206702E25426...

Signature of authorized agent of contracting business entity
(Declarant)

Hays County
House Bill 89 Verification

I, Michelle Dippel, the undersigned

representative of HNTB Corporation

(hereafter referred to as company) being an adult over the age of eighteen (18) years of age, after being duly sworn by the undersigned notary, do hereby depose and verify under oath that the company named-above, under the provisions of Subtitle F, Title 10, Government Code Chapter 2270:

1. Does not boycott Israel currently; and
2. Will not boycott Israel during the term of the contract.

Pursuant to Section 2270.001, Texas Government Code:

1. *"Boycott Israel" means refusing to deal with, terminating business activities with, or otherwise taking any action that is intended to penalize, inflict economic harm on, or limit commercial relations specifically with Israel, or with a person or entity doing business in Israel or in an Israeli-controlled territory, but does not include an action made for ordinary business purposes; and*
2. *"Company" means a for-profit sole proprietorship, organization, association, corporation, partnership, joint venture, limited partnership, limited liability partnership, or any limited liability company, including a wholly owned subsidiary, majority-owned subsidiary, parent company or affiliate of those entities or business associations that exist to make a profit.*

5/27/20
DATE

MRD
SIGNATURE OF COMPANY REPRESENTATIVE

On this the 27th day of May, 20 20, personally appeared Michelle Dippel, the above-named person, who after by me being duly sworn, did swear and confirm that the above is true and correct.

NOTARY SEAL

JACQUELYN WEIGHT FITZPATRICK
Notary ID #125893933
My Commission Expires
October 27, 2022

Jacquelyn Weight Fitzpatrick
NOTARY SIGNATURE

5/27/20
Date

Related Party Disclosure Form

Hays County strives to provide financial transparency to its taxpayers. Completion of this form will allow for added transparency into the procurement process by disclosing Vendor relationships with current or former Hays County employees. The existence of a relationship may not present a legal or ethical conflict for a Vendor. However, disclosure will allow for consideration of potential conflicts and/or ways to eliminate conflicts.

A Vendor who Employs any of the following is required to disclose the relationship on this form:

- Current Hays County employee (including elected or appointed official)(Complete Section A)
- Former Hays County employee who has been separated from Hays County for no less than four (4) years (including elected or appointed official) (Complete Section B)
- Person related within the 2nd degree of consanguinity or affinity to either of the above[1] (Complete Section C)

If no known relationships exist, complete Section D.

This form is required to be completed in full and submitted with the proposal package. A submitted proposal package that does not include this completed form will be considered non-responsive and will not be eligible for an award.

Section A: Current Hays County Employee

_____

Employee Name Title

Section B: Former Hays County Employee

_____

Employee Name Title Date of Separation from County

Section C: Person Related to Current or Former Hays County Employee

_____

Employee or Former Employee Name Title

_____

Name of Related Person Title Relationship

Section D: No Known Relationships

If no relationships in accordance with the above exist or are known to exist, provide a written explanation below:
_To the best of our knowledge there are no know conflicts of relationships between HNTB and Hays County at this time._____

_____

Attach additional pages if necessary.

I, the undersigned, hereby certify that the information provided is true and complete to the best of my knowledge.

HNTB Corporation
Name of Vendor

DocuSigned by:
Michelle Dippel
0A9D8B2223422...
Signature of Certifying Official

Vice President
Title of Certifying Official

Michelle Dippel
Printed Name of Certifying Official

6/2/2020
Date

[1]A degree of relationship is determined under Texas Government Code Chapter 573. (as outlined below)

Relationship of Consanguinity				
	1st Degree	**2nd Degree**	**3rd Degree***	**4th Degree***
Person	child or parent	grandchild, sister, brother or grand-parent	great-grandchild, niece, nephew, aunt,* uncle* or great-grandparent	great-great-grandchild, grandniece, grandnephew, first cousin, great aunt,* great uncle* or great-great-grandparent
* An aunt, uncle, great aunt or great uncle is related to a person by consanguinity only if he or she is the sibling of the person's parent or grandparent.				

Relationship of Affinity		
	1st Degree	**2nd Degree**
Person	spouse, mother-in-law, father-in-law, son-in-law, daughter-in-law, stepson, stepdaughter, stepmother or stepfather	brother-in-law, sister-in-law, spouse's grandparent, spouse's grandchild, grandchild's spouse or spouse of grandparent

"Vendor" shall mean any individuals or entity that seeks to enter into a contract with Hays County.

"Employs" shall mean any relationship wherein Vendor has made arrangements to compensate an individual, directly or by way of a business organization in which the individual has a sharehold or ownership interest, even if that arrangement is contractual and/or on an hourly-charge basis.

AGENDA ITEM REQUEST FORM

Hays County Commissioners Court
Tuesdays at 9:00 AM

Request forms are due in Microsoft Word Format via email by 2:00 p.m. on Wednesday.

AGENDA ITEM

Discussion and possible action to hold a public hearing to reduce the current 60 MPH speed limit to 45 MPH on the west end of Winters Mill Parkway for the new WISD Blue Hole Primary school.

ITEM TYPE	MEETING DATE	AMOUNT REQUIRED
ACTION-ROADS	July 21, 2020	

LINE ITEM NUMBER

AUDITOR USE ONLY

AUDITOR COMMENTS:

PURCHASING GUIDELINES FOLLOWED: N/A **AUDITOR REVIEW:** N/A

REQUESTED BY	SPONSOR	CO-SPONSOR
Jerry Borcherding	SHELL	N/A

SUMMARY

This action would establish a speed limit of 45 MPH on Winters Mill Parkway from RR 12 eastward for approximately 2,000 feet to help with school traffic. This request will also help with the future school zone speed limit of 35 MPH directly in front of the school per Texas MUTCD specs.

Blue Hole Primary School

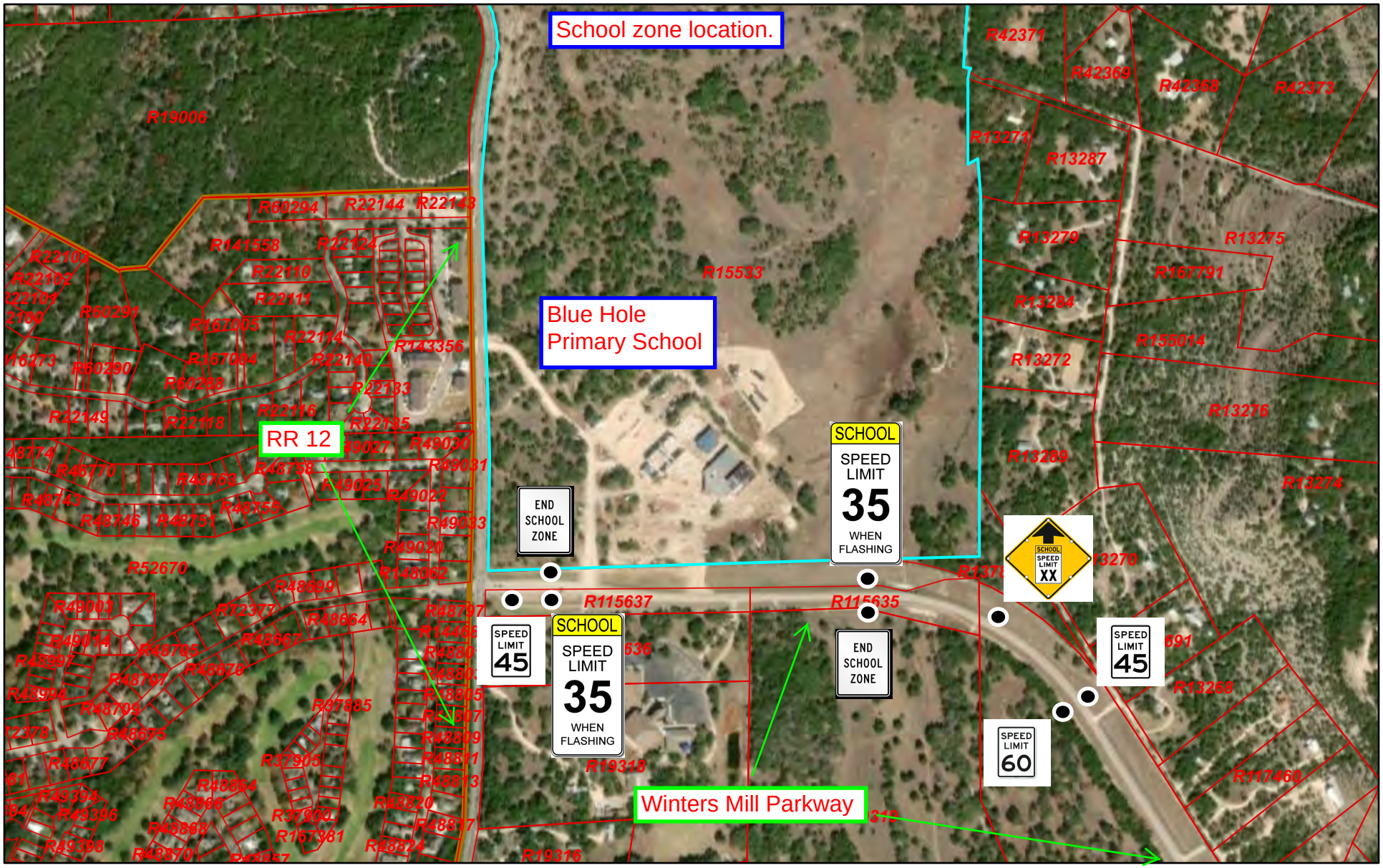

6/25/2020, 8:01:06 AM

Parcels

City Limits

1:9,028

0 0.05 0.1 0.2 mi

0 0.1 0.2 0.4 km

Source: Esri, Maxar, GeoEye, Earthstar Geographics, CNES/Airbus DS,

Hays County Appraisal District, BIS Consulting - www.bisconsulting.com

Disclaimer: This product is for informational purposes only and has not been prepared for or be suitable for legal, engineering, or surveying purposes. It does not represent an on-the-ground survey and represents only the approximate relative location of boundaries.

AGENDA ITEM REQUEST FORM

Hays County Commissioners Court

Tuesdays at 9:00 AM

Request forms are due in Microsoft Word Format via email by 2:00 p.m. on Wednesday.

AGENDA ITEM

Discussion and possible action to authorize the County Judge to execute a Professional Services Agreement/Contract between Hays County and Bowman Consulting Group, Ltd to provide Design Engineering services for FM 150 CTL Gap project in Precinct 1.

ITEM TYPE	MEETING DATE	AMOUNT REQUIRED
ACTION-ROADS	July 21, 2020	$65,000.00

LINE ITEM NUMBER

020-710-00.5448_008

AUDITOR USE ONLY

AUDITOR COMMENTS:

PURCHASING GUIDELINES FOLLOWED: YES **AUDITOR REVIEW:** MARISOL VILLARREAL-ALONZO

REQUESTED BY	SPONSOR	CO-SPONSOR
Jerry Borcherding, P.E., Transportation Director	INGALSBE	N/A

SUMMARY

The FM 150 CTL Gap (West of Waterleaf) project was initially designed as an extension on the "skipped" portion of the FM 150 widening project as part of the Partnership Program. The design of this Gap section has been funded through the Transportation Department. This new contract will also be funded by the Transportation Department and will allow for revisions to final construction plans, update cost estimate and project manual, as well as provide bid and construction phase support on the now standalone project.

HAYS COUNTY
CONTRACT FOR ENGINEERING SERVICES

FIRM: **Bowman Consulting Group, Ltd.** **("Engineer")**
ADDRESS: **1120 South Capital of Texas Hwy, Bldg 3, Suite 220, Austin, TX 78746**
PROJECT: **RM 150 Center Turn Lane Gap** **("Project")**

THE STATE OF TEXAS §
§
COUNTY OF HAYS §

THIS CONTRACT FOR ENGINEERING SERVICES ("Contract") is made and entered into, effective as the date of the last party's execution hereinbelow, by and between Hays County, Texas, a political subdivision of the State of Texas, whose offices are located at 111 E. San Antonio Street, Suite 300, San Marcos, Texas, 78666 (hereinafter referred to as "County"), and Engineer, and such Contract is for the purpose of contracting for professional engineering services.

RECITALS:

WHEREAS, V.T.C.A., Government Code §2254.002(2)(A)(vii) under Subchapter A entitled "Professional Services Procurement Act" provides for the procurement by counties of services of professional engineers; and

WHEREAS, County and Engineer desire to contract for such professional engineering services; and

WHEREAS, County and Engineer wish to document their agreement concerning the requirements and respective obligations of the parties;

NOW, THEREFORE, WITNESSETH:

That for and in consideration of the mutual promises contained herein and other good and valuable considerations, and the covenants and agreements hereinafter contained to be kept and performed by the respective parties hereto, it is agreed as follows:

ARTICLE 1
CONTRACT DOCUMENTS AND APPLICABLE PROJECT DOCUMENTS

A. Contract Documents. The Contract Documents consist of this Contract, any exhibits attached hereto (which exhibits are hereby incorporated into and made a part of this Contract), any fully executed Work Authorizations; any fully executed Supplemental Work Authorizations and all fully executed Contract Amendments (as defined herein in Article 14) which are subsequently issued. These form the entire contract, and all are as fully a part of this Contract as if attached to this Contract or repeated herein.

B. Project Documents. In addition to any other pertinent and necessary Project documents, the following documents shall be used in the development of the Project:

A. TxDOT 2011 Texas Manual of Uniform Traffic Control Devices for Streets and Highways, including latest revisions
B. Texas Department of Transportation's Standard Specifications for Construction of Highways, Streets, and Bridges, 2014 (English units)
C. National Environmental Policy Act (NEPA)
D. Texas Accessibility Standards (TAS) of the Architectural Barriers Act, Article 9102, Texas Civil Statutes, Effective April 4, 1994, including latest revisions
E. Americans with Disabilities Act (ADA) Regulations
F. U.S. Army Corps Regulations
G. International Building Code, current edition as updated
H. Hays County Design Criteria & Project Development Manual, latest edition
I. Hays County Multi-Corridor Transportation Plan Project Level Environmental Review and Compliance Protocol, latest edition
J. Hays County Protocol for Sustainable Roadsides, latest edition
K. TxDOT Bridge Design Manual - LRFD, latest edition
L. TxDOT Geotechnical Manual, latest edition

ARTICLE 2
NON-COLLUSION; DEBARMENT; AND FINANCIAL INTEREST PROHIBITED

A. Non-collusion. Engineer warrants that he/she/it has not employed or retained any company or persons, other than a bona fide employee working solely for Engineer, to solicit or secure this Contract, and that he/she/it has not paid or agreed to pay any company or engineer any fee, commission, percentage, brokerage fee, gifts, or any other consideration, contingent upon or resulting from the award or making of this Contract. For breach or violation of this warranty, County reserves and shall have the right to annul this Contract without liability or, in its discretion and at its sole election, to deduct from the contract price or compensation, or to otherwise recover, the full amount of such fee, commission, percentage, brokerage fee, gift or contingent fee.

B. Debarment Certification. Engineer must sign the Debarment Certification enclosed herewith as **Exhibit A**.

C. Financial Interest Prohibited. Engineer covenants and represents that Engineer, his/her/its officers, employees, agents, consultants and subcontractors will have no financial interest, direct or indirect, in the purchase or sale of any product, materials or equipment that will be recommended or required for the construction of the Project.

ARTICLE 3
ENGINEERING SERVICES

Engineer shall perform Engineering Services as identified in **Exhibit B** entitled "Engineering Services."

County will prepare and issue Work Authorizations, in substantially the same form identified and attached hereto as **Exhibit C** and entitled "Work Authorization No. 1", to authorize the Engineer to perform one or more tasks of the Engineering Services. Each Work Authorization will include a description of the work to be performed, a description of the tasks and milestones, a work schedule for the tasks, definite review times by County and Engineer of all Engineering Services and a fee amount agreed upon by the County and Engineer. The amount payable for a Work Authorization shall be supported by the estimated cost of each work task as described in the Work Authorization. The Work Authorization will not waive the Engineer's responsibilities and obligations established in this Contract. The executed Work Authorizations shall become part of this Contract.

All work must be completed on or before the date specified in the Work Authorization. The Engineer shall promptly notify the County of any event which will affect completion of the Work Authorization, although such notification shall not relieve the Engineer from costs or liabilities resulting from delays in completion of the Work Authorization. Should the review times or Engineering Services take longer than shown on the Work Authorization, through no fault of Engineer, Engineer may submit a timely written request for additional time, which shall be subject to the approval of the County. Any changes in a Work Authorization shall be enacted by a written Supplemental Work Authorization before additional costs may be incurred. Any Supplemental Work Authorization must be executed by both parties within the period specified in the Work Authorization.

ARTICLE 4
CONTRACT TERM

A. Term. The Engineer is expected to complete the Engineering Services described herein in accordance with the above described Work Authorizations or any Supplemental Work Authorization related thereto. If Engineer does not perform the Engineering Services in accordance with each applicable Work Authorization or any Supplemental Work Authorization related thereto, then County shall have the right to terminate this Contract as set forth below in Article 20. So long as the County elects not to terminate this Contract, it shall continue from day to day until such time as the Engineering Services are completed in accordance with each applicable Work Authorization or any Supplemental Work Authorization related thereto. Any Engineering Services performed or costs incurred after the date of termination shall not be eligible for reimbursement. Engineer shall

notify County in writing as soon as possible if he/she/it determines, or reasonably anticipates, that the Engineering Services will not be completed in accordance with an applicable Work Authorization or any Supplemental Work Authorization related thereto.

B. Work Authorizations. Engineer acknowledges that each Work Authorization is of critical importance, and agrees to undertake all reasonably necessary efforts to expedite the performance of Engineering Services required herein so that construction of the Project will be commenced and completed as scheduled. In this regard, and subject to adjustments in a particular Work Authorization, as provided in Article 3 herein, Engineer shall proceed with sufficient qualified personnel and consultants necessary to fully and timely accomplish all Engineering Services required under this Contract in a professional manner.

C. Commencement of Engineering Services. After execution of this Contract, Engineer shall not proceed with Engineering Services until Engineer has been thoroughly briefed on the scope of the Project and has been notified in writing by the County to proceed, as provided in Article 8.

ARTICLE 5
COMPENSATION AND EXPENSES

County shall pay and Engineer agrees to accept up to the amount shown below as full compensation for the Engineering Services performed and to be performed under this Contract. The basis of compensation for the services of principals and employees engaged in the performance of the Engineering Services shall be based on the Rate Schedule set forth in the attached **Exhibit D**.

The maximum amount payable under this Contract, without modification, is **Sixty-five thousand Dollars ($65,000.00)** (the "Compensation Cap"), provided that any amounts paid or payable shall be solely pursuant to a validly issued Work Authorization or any Supplemental Work Authorization related thereto. In no event may the aggregate amount of compensation authorized under Work Authorizations and Supplemental Work Authorizations exceed the Compensation Cap. The Compensation Cap shall be revised equitably only by written Contract Amendments executed by both parties in the event of a change the overall scope of the Engineering Services set forth in **Exhibit B**, as authorized by County.

The Compensation Cap is based upon all labor and non-labor costs estimated to be required in the performance of the Engineering Services provided for under this Contract. Should the actual costs of all labor and non-labor costs rendered under this Contract be less than the above stated Compensation Cap, then Engineer shall receive compensation for only actual fees and costs of the Engineering Services actually rendered and incurred, which may be less than the above stated Compensation Cap.

The Compensation Cap herein referenced may be adjusted for Additional Engineering Services requested and performed only if approved by a written Contract Amendment signed by both parties.

Engineer shall prepare and submit to County monthly progress reports in sufficient detail to support the progress of the Engineering Services and to support invoices requesting monthly payment. The format for such monthly progress reports and invoices must be in a format acceptable to County. Satisfactory progress of Engineering Services shall be an absolute condition of payment.

Engineer shall be reimbursed for actual non-labor and subcontract expenses incurred in the performance of the services under this Contract at the Engineer's invoice cost. Invoices requesting reimbursement for costs and expenditures related to the Project (reimbursables) must be accompanied by copies of the provider's invoice. The copies of the provider's invoice must evidence the actual costs billed to Engineer without mark-up.

ARTICLE 6
METHOD OF PAYMENT

Payments to Engineer shall be made while Engineering Services are in progress. Engineer shall prepare and submit to County's Road Bond Program Manager, not more frequently than once per month, a progress report as referenced in Article 5 above. Such progress report shall state the percentage of completion of Engineering Services accomplished for an applicable Work Authorization or any Supplemental Work Authorization related thereto during that billing period and to date. This submittal shall also include a progress assessment report in a form acceptable to the County Auditor.

Simultaneous with submission of such progress report, Engineer shall prepare and submit one (1) original of a certified invoice to the County Auditor in a form acceptable to the County Auditor. All invoices submitted to County must, at a minimum, be accompanied by an original complete packet of supporting documentation and time sheets detailing hours worked by staff persons with a description of the work performed by such persons. For Additional Engineering Services performed pursuant to this Contract, a separate invoice or itemization of the Additional Engineering Services must be presented with the same aforementioned requirements.

Payments shall be made by County based upon Engineering Services actually provided and performed. Upon timely receipt and approval of each statement, County shall make a good faith effort to pay the amount which is due and payable within thirty (30) days of the County Auditor's receipt. County reserves the right to reasonably withhold payment pending verification of satisfactory Engineering Services performed. Engineer has the responsibility to submit proof to County, adequate and sufficient in its determination, that tasks of an applicable Work Authorization or any Supplemental Work Authorization related thereto were completed.

The certified statements shall show the total amount earned to the date of submission and shall show the amount due and payable as of the date of the current statement. Final payment does not relieve Engineer of the responsibility of correcting any errors and/or omissions resulting from his/her/its negligence.

Upon submittal of the initial invoice, Engineer shall provide the County Auditor with an Internal Revenue Form W-9, Request for Taxpayer Identification Number and Certification that is complete in compliance with the Internal Revenue Code, its rules and regulations.

ARTICLE 7
PROMPT PAYMENT POLICY

In accordance with Chapter 2251, V.T.C.A., Texas Government Code, payment to Engineer will be made within thirty (30) days of the day on which the performance of services was complete, or within thirty (30) days of the day on which the County Auditor receives a correct invoice for services, whichever is later.

Engineer may charge a late fee (fee shall not be greater than that which is permitted by Texas law) for payments not made in accordance with this prompt payment policy; however, this policy does not apply in the event:

A. There is a bona fide dispute between County and Engineer concerning the supplies, materials, or equipment delivered or the services performed that causes the payment to be late; or

B. The terms of a federal contract, grant, regulation, or statute prevent County from making a timely payment with federal funds; or

C. There is a bona fide dispute between Engineer and a subcontractor/subconsultant or between a subcontractor/subconsultant and its supplier concerning supplies, materials, or equipment delivered or the Engineering Services performed which causes the payment to be late; or

D. The invoice is not mailed to the County Auditor in strict accordance with instructions, if any, on the purchase order, or this Contract or other such contractual agreement.

The County Auditor shall document to Engineer the issues related to disputed invoices within ten (10) calendar days of receipt of such invoice. Any non-disputed invoices shall be considered correct and payable per the terms of Chapter 2251, V.T.C.A., Texas Government Code.

ARTICLE 8
COMMENCEMENT OF ENGINEERING SERVICES

The Engineer shall not proceed with any task of the Engineering Services until Engineer has been thoroughly briefed on the scope of the Project and instructed, in writing by the County, to proceed with the applicable Engineering Services. The County shall not be responsible for work performed or costs incurred by Engineer related to any task for which a Work Authorization or a Supplemental Work Authorization related thereto has not been issued and signed by both parties. Engineer shall not be required to perform any work for which a Work Authorization or a Supplemental Work Authorization related thereto has not been issued and signed by both parties.

ARTICLE 9
PROJECT TEAM

County's Designated Representative for purposes of this Contract is as follows:

County's Road Bond Program Manager
Attn: Michael Weaver
HNTB Corporation
701 Brazos, Suite 450
Austin, Texas 78701

County shall have the right, from time to time, to change the County's Designated Representative by giving Engineer written notice thereof. With respect to any action, decision or determination which is to be taken or made by County under this Contract, the County's Designated Representative may take such action or make such decision or determination or shall notify Engineer in writing of an individual responsible for and capable of taking such action, decision or determination and shall forward any communications and documentation to such individual for response or action. Actions, decisions or determinations by the County's Designated Representative on behalf of County shall be done in his or her reasonable business judgment unless express standards or parameters therefor are included in this Contract, in which case, actions taken by the County's Designated Representative shall be in accordance with such express standards or parameters. Any consent, approval, decision or determination hereunder by the County's Designated Representative shall be binding on County; *provided, however,* the County's Designated Representative shall not have any right to modify, amend or terminate this Contract, an Executed Work Authorization, an executed Supplemental Work Authorization or executed Contract Amendment. County's Designated Representative shall not have any authority to execute a Contract Amendment, Work Authorization or any Supplemental Work Authorization unless otherwise granted such authority by the Hays County Commissioners Court.

Engineer's Designated Representative for purposes of this Contract is as follows:

Attn: Nicholas Kehl
Bowman Consulting Group, Ltd.
1120 South Capital of Texas Hwy
Building 3, Suite 220
Austin, Texas 78746

Engineer shall have the right, from time to time, to change the Engineer's Designated Representative by giving County written notice thereof. With respect to any action, decision or determination which is to be taken or made by Engineer under this Contract, the Engineer's Designated Representative may take such action or make such decision or determination or shall notify County in writing of an individual responsible for and capable of taking such action, decision or determination and shall forward any communications and documentation to such individual for response or action. Actions, decisions or determinations by the Engineer's Designated Representative on behalf of Engineer shall be done in his or her reasonable business judgment unless express standards or parameters therefor are included in this Contract, in which

case, actions taken by the Engineer's Designated Representative shall be in accordance with such express standards or parameters. Any consent, approval, decision or determination hereunder by the Engineer's Designated Representative shall be binding on Engineer. Engineer's Designated Representative shall have the right to modify, amend and execute Work Authorizations, Supplemental Work Authorizations and Contract Amendments on behalf of Engineer.

ARTICLE 10
PROGRESS EVALUATION

Engineer shall, from time to time during the progress of the Engineering Services, confer with County at County's election. Engineer shall prepare and present such information as may be pertinent and necessary, or as may be reasonably requested by County, in order for County to evaluate features of the Engineering Services. At the request of County or Engineer, conferences shall be provided at Engineer's office, the offices of County, or at other locations designated by County. When requested by County, such conferences shall also include evaluation of the Engineering Services. County may, from time to time, require Engineer to appear and provide information to the Hays County Commissioners Court.

Should County determine that the progress in Engineering Services does not satisfy an applicable Work Authorization or any Supplemental Work Authorization related thereto, then County shall review same with Engineer to determine corrective action required.

Engineer shall promptly advise County in writing of events which have or may have a significant impact upon the progress of the Engineering Services, including but not limited to the following:

A. Problems, delays, adverse conditions which may materially affect the ability to meet the objectives of an applicable Work Authorization or any Supplemental Work Authorization related thereto, or preclude the attainment of Project Engineering Services units by established time periods; and such disclosure shall be accompanied by statement of actions taken or contemplated, and County assistance needed to resolve the situation, if any; and

B. Favorable developments or events which enable meeting goals sooner than anticipated in relation to an applicable Work Authorization's or any Supplemental Work Authorization related thereto.

ARTICLE 11
SUSPENSION

Should County desire to suspend the Engineering Services, but not to terminate this Contract, then such suspension may be effected by County giving Engineer thirty (30) calendar days' verbal notification followed by written confirmation to that effect. Such thirty-day notice may be waived in writing by agreement and signature of both parties. The Engineering Services may be reinstated and resumed in full force and effect within sixty (60) days of receipt of written notice from County to resume the Engineering Services. Such sixty-day (60) notice may be waived in writing by agreement and signature of both parties. If this Contract is suspended for more than thirty (30) days, Engineer shall have the option of terminating this Contract and, in the event, Engineer shall be compensated for all Engineering Services performed and reimbursable expenses incurred, provided such Engineering Services and reimbursable expenses have been previously authorized and approved by County, to the effective date of suspension.

If County suspends the Engineering Services, the contract period as determined in Article 4, and the Work Authorization or any Supplemental Work Authorization related thereto, shall be extended for a time period equal to the suspension period.

County assumes no liability for Engineering Services performed or costs incurred prior to the date authorized by County for Engineer to begin Engineering Services, and/or during periods when Engineering Services is suspended, and/or subsequent to the completion date.

ARTICLE 12
ADDITIONAL ENGINEERING SERVICES

If Engineer forms a reasonable opinion that any work he/she/it has been directed to perform is beyond the overall scope of this Contract, as set forth in **Exhibit B,** and as such constitutes extra work ("Additional Engineering Services"), he/she/it shall promptly notify County in writing. In the event County finds that such work does constitute Additional Engineering Services, County shall so advise Engineer and a written Contract Amendment will be executed between the parties as provided in Article 14. Any increase to the Compensation Cap due to Additional Engineering Services must be set forth in such Contract Amendment. Engineer shall not perform any proposed Additional Engineering Services nor incur any additional costs prior to the execution, by both parties, of a written Contract Amendment. Following the execution of a Contract Amendment that provides for Additional Engineering Services, a written Work Authorization, which sets forth the Additional Engineering Services to be performed, must be executed by the parties. County shall not be responsible for actions by Engineer nor for any costs incurred by Engineer relating to Additional Engineering Services not directly associated with the performance of the Engineering Services authorized in this Contract, by a fully executed Work Authorization or a fully executed Contract Amendment thereto.

ARTICLE 13
CHANGES IN COMPLETED ENGINEERING SERVICES

If County deems it necessary to request changes to previously satisfactorily completed

Engineering Services or parts thereof which involve changes to the original Engineering Services or character of Engineering Services under this Contract, then Engineer shall make such revisions as requested and as directed by County. Such revisions shall be considered as Additional Engineering Services and paid for as specified under Article 12.

Engineer shall make revisions to Engineering Services authorized hereunder as are necessary to correct errors appearing therein, when required to do so by County. No additional compensation shall be due for such Engineering Services.

ARTICLE 14
CONTRACT AMENDMENTS

The terms set out in this Contract may be modified by a written fully executed Contract Amendment. Changes and modifications to a fully executed Work Authorization shall be made in the form of a Supplemental Work Authorization. To the extent that such changes or modifications to a Work Authorization do not also require modifications to the terms of this Contract (i.e. changes to the overall scope of Engineering Services set forth in **Exhibit B**, modification of the Compensation Cap, etc.) a Contract Amendment will not be required.

ARTICLE 15
USE OF DOCUMENTS

All documents, including but not limited to drawings, specifications and data or programs stored electronically, (hereinafter referred to as "Engineering Work Products") prepared by Engineer and its subcontractors/subconsultants are related exclusively to the services described in this Contract and are intended to be used with respect to this Project. However, it is expressly understood and agreed by and between the parties hereto that all of Engineer's designs under this Contract (including but not limited to tracings, drawings, estimates, specifications, investigations, studies and other documents, completed or partially completed), shall be the property of County to be thereafter used in any lawful manner as County elects. Any such subsequent use made of documents by County shall be at County's sole risk and without liability to Engineer.

By execution of this Contract and in confirmation of the fee for services to be paid under this Contract, Engineer hereby conveys, transfers and assigns to County all rights under the Federal Copyright Act of 1976 (or any successor copyright statute), as amended, all common law copyrights and all other intellectual property rights acknowledged by law in the Project Designs and work product developed under this Contract. Copies may be retained by Engineer. Engineer shall be liable to County for any loss or damage to any such documents while they are in the possession of or while being worked upon by Engineer or anyone connected with Engineer, including agents, employees, Engineers or subcontractors/subconsultants. All documents so lost or damaged shall be replaced or restored by Engineer without cost to County.

Upon execution of this Contract, Engineer grants to County permission to reproduce Engineer's work and documents for purposes of constructing, using and maintaining the Project, provided that County shall comply with its obligations, including prompt payment of all sums when due, under this Contract. Engineer shall obtain similar permission from Engineer's

subcontractors/subconsultants consistent with this Contract. If and upon the date Engineer is adjudged in default of this Contract, County is permitted to authorize other similarly credentialed design professionals to reproduce and, where permitted by law, to make changes, corrections or additions to the work and documents for the purposes of completing, using and maintaining the Project.

County shall not assign, delegate, sublicense, pledge or otherwise transfer any permission granted herein to another party without the prior written consent of Engineer. However, County shall be permitted to authorize the contractor, subcontractors and material or equipment suppliers to reproduce applicable portions of the Engineering Work Products appropriate to and for use in the execution of the Work. Submission or distribution of Engineering Work Products to meet official regulatory requirements or for similar purposes in connection with the Project is permitted. Any unauthorized use of the Engineering Work Products shall be at County's sole risk and without liability to Engineer and its Engineers.

Prior to Engineer providing to County any Engineering Work Products in electronic form or County providing to Engineer any electronic data for incorporation into the Engineering Work Products, County and Engineer shall by separate written contract set forth the specific conditions governing the format of such Engineering Work Products or electronic data, including any special limitations not otherwise provided in this Contract. Any electronic files are provided by Engineer for the convenience of County, and use of them is at County's sole risk. In the case of any defects in electronic files or any discrepancies between them and any hardcopy of the same documents prepared by Engineer, the hardcopy shall prevail. Only printed copies of documents conveyed by Engineer shall be relied upon.

Engineer shall have no liability for changes made to the drawings by other engineers subsequent to the completion of the Project. Any such change shall be sealed by the engineer making that change and shall be appropriately marked to reflect what was changed or modified.

ARTICLE 16
PERSONNEL, EQUIPMENT AND MATERIAL

Engineer shall furnish and maintain, at its own expense, quarters for the performance of all Engineering Services, and adequate and sufficient personnel and equipment to perform the Engineering Services as required. All employees of Engineer shall have such knowledge and experience as will enable them to perform the duties assigned to them. Any employee of Engineer who, in the reasonable opinion of County, is incompetent or whose conduct becomes detrimental to the Engineering Services shall immediately be removed from association with the Project when so instructed by County. Engineer certifies that it presently has adequate qualified personnel in its employment for performance of the Engineering Services required under this Contract, or will obtain such personnel from sources other than County. Engineer may not change the Project Manager without prior written consent of County.

ARTICLE 17
SUBCONTRACTING

Engineer shall not assign, subcontract or transfer any portion of the Engineering Services under this Contract without prior written approval from County. All subcontracts shall include the provisions required in this Contract. No subcontract shall relieve Engineer of any responsibilities under this Contract.

ARTICLE 18
REVIEW OF ENGINEERING SERVICES

Engineer's Engineering Services will be reviewed by County under its applicable technical requirements and procedures.

A. Completion. Reports, plans, specifications, and supporting documents shall be submitted by Engineer on or before the dates specified in the applicable Work Authorization or Supplemental Work Authorization related thereto. Upon receipt of same, the submission shall be checked for completion. "Completion" or "Complete" shall be defined as all of the required items, as set out in the applicable Work Authorization, have been included in compliance with the requirements of this Contract. The completeness of any Engineering Services submitted to County shall be determined by County within thirty (30) days of such submittal and County shall notify Engineer in writing within such thirty (30) day period if such Engineering Services have been found to be incomplete. If the submission is Complete, County shall notify Engineer and County's technical review process will begin.

If the submission is not Complete, County shall notify Engineer, who shall perform such professional services as are required to complete the Engineering Services and resubmit it to County. This process shall be repeated until a submission is Complete.

B. Acceptance. County shall review the completed Engineering Services for compliance with this Contract. If necessary, the completed Engineering Services shall be returned to Engineer, who shall perform any required Engineering Services and resubmit it to County. This process shall be repeated until the Engineering Services are Accepted. "Acceptance" or "Accepted" shall mean that in the County's reasonable opinion, substantial compliance with the requirements of this Contract has been achieved.

C. Final Approval. After Acceptance, Engineer shall perform any required modifications, changes, alterations, corrections, redesigns, and additional work necessary to receive Final Approval by the County. "Final Approval" in this sense shall mean formal recognition that the Engineering Services have been fully carried out.

D. Errors and Omissions. After Final Approval, Engineer shall, without additional compensation, perform any work required as a result of Engineer's development of the work which is found to be in error or omission due to Engineer's negligence. However, any work required or

occasioned for the convenience of County after Final Approval shall be paid for as Additional Engineering Services.

E. Disputes Over Classifications. In the event of any dispute over the classification of Engineer's Engineering Services as Complete, Accepted, or having attained Final Approved under this Contract, the decision of the County shall be final and binding on Engineer, subject to any civil remedy or determination otherwise available to the parties and deemed appropriate by the parties.

F. County's Reliance on Engineer. ENGINEER'S DUTIES AS SET FORTH HEREIN SHALL AT NO TIME BE IN ANY WAY DIMINISHED BY REASON OF ANY REVIEW, EVALUATION OR APPROVAL BY THE COUNTY NOR SHALL THE ENGINEER BE RELEASED FROM ANY LIABILITY BY REASON OF SUCH REVIEW, EVALUATION OR APPROVAL BY THE COUNTY, IT BEING UNDERSTOOD THAT THE COUNTY AT ALL TIMES IS ULTIMATELY RELYING UPON THE ENGINEER'S SKILL, ABILITY AND KNOWLEDGE IN PERFORMING THE ENGINEERING SERVICES REQUIRED HEREUNDER.

ARTICLE 19
VIOLATION OF CONTRACT TERMS/BREACH OF CONTRACT

Violation of contract terms or breach of contract by Engineer shall be grounds for termination of this Contract, and any increased costs arising from Engineer's default, breach of contract, or violation of contract terms shall be paid by Engineer.

ARTICLE 20
TERMINATION

This Contract may be terminated as set forth below.

A. By mutual agreement and consent, in writing, of both parties.

B. By County, by notice in writing to Engineer, as a consequence of failure by Engineer to perform the Engineering Services set forth herein in a satisfactory manner.

C. By either party, upon the failure of the other party to fulfill its obligations as set forth herein.

D. By County, for reasons of its own and not subject to the mutual consent of Engineer, upon not less than thirty (30) days' written notice to Engineer.

E. By satisfactory completion of all Engineering Services and obligations described herein.

Should County terminate this Contract as herein provided, no fees other than fees due and payable at the time of termination plus reimbursable expenses incurred shall thereafter be paid to Engineer. In determining the value of the Engineering Services performed by Engineer prior to termination, County shall be the sole judge. Compensation for Engineering Services at termination will be based on a percentage of the Engineering Services completed at that time. Should County terminate this Contract under Subsection (D) immediately above, then the amount

charged during the thirty-day notice period shall not exceed the amount charged during the preceding thirty (30) days.

If Engineer defaults in the performance of this Contract or if County terminates this Contract for fault on the part of Engineer, then County shall give consideration to the actual costs incurred by Engineer in performing the Engineering Services to the date of default, the amount of Engineering Services required which was satisfactorily completed to date of default, the value of the Engineering Services which are usable to County, the cost to County of employing another firm to complete the Engineering Services required and the time required to do so, and other factors which affect the value to County of the Engineering Services performed at the time of default.

The termination of this Contract and payment of an amount in settlement as prescribed above shall extinguish all rights, duties, and obligations of County under this Contract. If the termination of this Contract is due to the failure of Engineer to fulfill his/her/its contractual obligations, then County may take over the Project and prosecute the Engineering Services to completion. In such case, Engineer shall be liable to County for any additional and reasonable costs incurred by County.

Engineer shall be responsible for the settlement of all contractual and administrative issues arising out of any procurements made by Engineer in support of the Engineering Services under this Contract.

ARTICLE 21
COMPLIANCE WITH LAWS

A. Compliance. Engineer shall comply with all applicable federal, state and local laws, statutes, codes, ordinances, rules and regulations, and the orders and decrees of any court, or administrative bodies or tribunals in any manner affecting the performance of this Contract, including without limitation, minimum/maximum salary and wage statutes and regulations, and licensing laws and regulations. Engineer shall furnish County with satisfactory proof of his/her/its compliance.

Engineer shall further obtain all permits and licenses required in the performance of the Engineering Services contracted for herein.

B. Taxes. Engineer will pay all taxes, if any, required by law arising by virtue of the Engineering Services performed hereunder. County is qualified for exemption pursuant to the provisions of Section 151.309 of the Texas Limited Sales, Excise, and Use Tax Act.

ARTICLE 22
INDEMNIFICATION

ENGINEER AGREES, TO THE FULLEST EXTENT PERMITTED BY LAW, TO INDEMNIFY AND HOLD THE COUNTY HARMLESS FROM AND AGAINST ANY AND ALL LIABILITIES, LOSSES, PENALTIES, JUDGMENTS, CLAIMS, LAWSUITS, DAMAGES, COSTS AND EXPENSES, INCLUDING, BUT NOT LIMITED

TO, ATTORNEYS' FEES, ("LOSSES") TO THE EXTENT SUCH LOSSES ARE CAUSED BY OR RESULTS FROM A NEGLIGENT ACT OR OMISSION, NEGLIGENCE, OR INTENTIONAL TORT COMMITTED BY ENGINEER, ENGINEER'S EMPLOYEES, AGENTS, OR ANY OTHER PERSON OR ENTITY UNDER CONTRACT WITH ENGINEER INCLUDING, WITHOUT LIMITATION, ENGINEER'S SUBCONSULTANTS, OR ANY OTHER ENTITY OVER WHICH ENGINEER EXERCISES CONTROL.

ENGINEER FURTHER AGREES, TO THE FULLEST EXTENT PERMITTED BY LAW, TO INDEMNIFY AND HOLD THE COUNTY HARMLESS FROM ANY AND ALL LIABILITIES, LOSSES, PENALTIES, JUDGMENTS, CLAIMS, LAWSUITS, DAMAGES, COSTS AND EXPENSES, INCLUDING, BUT NOT LIMITED TO, ATTORNEYS' FEES, ("LOSSES") TO THE EXTENT SUCH LOSSES ARE CAUSED BY OR RESULTS FROM ENGINEER'S FAILURE TO PAY ENGINEER'S EMPLOYEES, SUBCONTRACTORS, SUBCONSULTANTS, OR SUPPLIERS, IN CONNECTION WITH ANY OF THE WORK PERFORMED OR TO BE PERFORMED UNDER THIS CONTRACT BY ENGINEER.

ENGINEER FURTHER AGREES TO INDEMNIFY AND HOLD THE COUNTY HARMLESS FROM ANY AND ALL LIABILITIES, LOSSES, PENALTIES, CLAIMS, LAWSUITS, DAMAGES, COSTS AND EXPENSES, INCLUDING, BUT NOT LIMITED TO, ATTORNEYS' FEES, ("LOSSES") TO THE EXTENT SUCH LOSSES ARE CAUSED BY OR RESULTS FROM THE INFRINGEMENT OF ANY INTELLECTUAL PROPERTY ARISING OUT OF THE USE OF ANY PLANS, DESIGN, DRAWINGS, OR SPECIFICATIONS FURNISHED BY ENGINEER IN THE PERFORMANCE OF THIS CONTRACT.

THE LIMITS OF INSURANCE REQUIRED IN THIS CONTRACT AND/OR THE CONTRACT DOCUMENTS SHALL NOT LIMIT ENGINEER'S OBLIGATIONS UNDER THIS SECTION. THE TERMS AND CONDITIONS CONTAINED IN THIS SECTION SHALL SURVIVE THE TERMINATION OF THE CONTRACT AND/OR CONTRACT DOCUMENTS OR THE SUSPENSION OF THE WORK HEREUNDER. TO THE EXTENT THAT ANY LIABILITIES, PENALTIES, DEMANDS, CLAIMS, LAWSUITS, LOSSES, DAMAGES, COSTS AND EXPENSES ARE CAUSED IN PART BY THE ACTS OF THE COUNTY OR THIRD PARTIES FOR WHOM ENGINEER IS NOT LEGALLY LIABLE, ENGINEER'S OBLIGATIONS SHALL BE IN PROPORTION TO ENGINEER'S FAULT. THE OBLIGATIONS HEREIN SHALL ALSO EXTEND TO ANY ACTIONS BY THE COUNTY TO ENFORCE THIS INDEMNITY OBLIGATION.

IN THE EVENT THAT CONTRACTORS INITIATE LITIGATION AGAINST THE COUNTY IN WHICH THE CONTRACTOR ALLEGES DAMAGES AS A RESULT OF ANY NEGLIGENT ACTS, ERRORS OR OMISSIONS OF ENGINEER, ITS EMPLOYEES, AGENTS, SUBCONTRACTORS, SUBCONSULTANTS, OR SUPPLIERS, OR OTHER ENTITIES OVER WHICH ENGINEER EXERCISES CONTROL, INCLUDING, BUT NOT LIMITED TO, DEFECTS, ERRORS, OR OMISSIONS, THEN THE COUNTY SHALL HAVE THE RIGHT TO JOIN ENGINEER IN ANY SUCH PROCEEDINGS AT THE COUNTY'S COST. ENGINEER SHALL ALSO HOLD THE COUNTY HARMLESS AND INDEMNIFY THE COUNTY TO THE EXTENT THAT ENGINEER, ANY OF ITS EMPLOYEES, AGENTS, SUBCONTRACTORS, SUBCONSULTANTS, OR SUPPLIERS, OR OTHER ENTITIES OVER WHICH ENGINEER EXERCISES CONTROL, CAUSED SUCH DAMAGES TO CONTRACTOR, INCLUDING ANY AND ALL COSTS AND ATTORNEYS' FEES INCURRED BY THE COUNTY IN CONNECTION WITH THE DEFENSE OF ANY CLAIMS WHERE ENGINEER, ITS EMPLOYEES, AGENTS, SUBCONTRACTORS, SUBCONSULTANTS, OR SUPPLIERS, OR OTHER ENTITIES OVER WHICH ENGINEER EXERCISES CONTROL, ARE ADJUDICATED AT FAULT.

ARTICLE 23
ENGINEER'S RESPONSIBILITIES

Engineer shall be responsible for the accuracy of his/her/its Engineering Services and shall promptly make necessary revisions or corrections to its work product resulting from errors, omissions, or negligent acts, and same shall be done without compensation. County shall determine Engineer's responsibilities for all questions arising from design errors and/or omissions, subject to the dispute resolution provisions of Article 33. Engineer shall not be relieved of responsibility for subsequent correction of any such errors or omissions in its work product, or for clarification of any ambiguities until after the construction phase of the Project has been completed.

ARTICLE 24
ENGINEER'S SEAL

The responsible engineer shall sign, seal and date all appropriate engineering submissions to County in accordance with the Texas Engineering Practice Act and the rules of the State Board of Registration for Professional Engineers.

ARTICLE 25
INSURANCE

Engineer must comply with the following insurance requirements at all times during this Contract:

A. Coverage Limits. Engineer, at Engineer's sole cost, shall purchase and maintain during the entire term while this Contract is in effect the following insurance:

1. Worker's Compensation in accordance with statutory requirements.
2. Commercial General Liability Insurance with a combined minimum Bodily Injury and Property Damage limits of $1,000,000.00 per occurrence and $2,000,000.00 in the aggregate.
3. Automobile Liability Insurance for all owned, non-owned, and hired vehicles with combined minimum limits for Bodily Injury and Property Damage limits of $500,000.00 per occurrence and $1,000,000.00 in the aggregate.
4. Professional Liability Errors and Omissions Insurance in the amount of $2,000,000.00 per claim.

B. Additional Insureds; Waiver of Subrogation. County, its directors, officers and employees shall be added as additional insureds under policies listed under (2) and (3) above, and on those policies where County, its directors, officers and employees are additional insureds, such insurance shall be primary and any insurance maintained by County shall be excess and not contribute with it. Such policies shall also include waivers of subrogation in favor of County.

C. Premiums and Deductible. Engineer shall be responsible for payment of premiums for all of the insurance coverages required under this section. Engineer further agrees

that for each claim, suit or action made against insurance provided hereunder, with respect to all matters for which the Engineer is responsible hereunder, Engineer shall be solely responsible for all deductibles and self-insured retentions. Any deductibles or self-insured retentions over $50,000 in the Engineer's insurance must be declared and approved in writing by County in advance.

D. Commencement of Work. Engineer shall not commence any field work under this Contract until he/she/it has obtained all required insurance and such insurance has been approved by County. As further set out below, Engineer shall not allow any subcontractor/subconsultant(s) to commence work to be performed in connection with this Contract until all required insurance has been obtained and approved and such approval shall not be unreasonably withheld. Approval of the insurance by County shall not relieve or decrease the liability of Engineer hereunder.

E. Insurance Company Rating. The required insurance must be written by a company approved to do business in the State or Texas with a financial standing of at least an A-rating, as reflected in Best's insurance ratings or by a similar rating system recognized within the insurance industry at the time the policy is issued.

F. Certification of Coverage. Engineer shall furnish County with a certification of coverage issued by the insurer. Engineer shall not cause any insurance to be canceled nor permit any insurance to lapse. **In addition to any other notification requires set forth hereunder, Engineer shall also notify County, within twenty-four (24) hours of receipt, of any notices of expiration, cancellation, non-renewal, or material change in coverage it receives from its insurer.**

G. No Arbitration. It is the intention of the County and agreed to and hereby acknowledged by the Engineer, that no provision of this Contract shall be construed to require the County to submit to mandatory arbitration in the settlement of any claim, cause of action or dispute, except as specifically required in direct connection with an insurance claim or threat of claim under an insurance policy required hereunder or as may be required by law or a court of law with jurisdiction over the provisions of this Contract.

H. Subcontractor/Subconsultant's Insurance. Without limiting any of the other obligations or liabilities of Engineer, Engineer shall require each subcontractor/subconsultant performing work under this Contract (to the extent a subcontractor/subconsultant is allowed by County) to maintain during the term of this Contract, at the subcontractor/subconsultant's own expense, the same stipulated minimum insurance required in this Article above, including the required provisions and additional policy conditions as shown below in this Article.

Engineer shall obtain and monitor the certificates of insurance from each subcontractor/subconsultant in order to assure compliance with the insurance requirements. Engineer must retain the certificates of insurance for the duration of this Contract, and shall have the responsibility of enforcing these insurance requirements among its subcontractor/subconsultants. County shall be entitled, upon request and without expense, to receive copies of these certificates of insurance.

I. Insurance Policy Endorsements. Each insurance policy shall include the following conditions by endorsement to the policy:

1. County shall be notified thirty (30) days prior to the expiration, cancellation, non-renewal or any material change in coverage, and such notice thereof shall be given to County by certified mail to:

   Hays County Auditor
   c/o: Vickie G. Dorsett
   712 S. Stagecoach Trail, Suite 1071
   San Marcos, Texas 78666

   With copy to: HNTB Corporation
   Attn: Michael Weaver
   701 Brazos, Suite 450
   Austin, Texas 78701

2. The policy clause "Other Insurance" shall not apply to any insurance coverage currently held by County, to any such future coverage, or to County's Self-Insured Retentions of whatever nature.

J. Cost of Insurance. The cost of all insurance required herein to be secured and maintained by Engineer shall be borne solely by Engineer, with certificates of insurance evidencing such minimum coverage in force to be filed with County. Such Certificates of Insurance are evidenced as **Exhibit F** herein entitled "Certificates of Insurance."

ARTICLE 26
COPYRIGHTS

County shall have the royalty-free, nonexclusive and irrevocable right to reproduce, publish or otherwise use, and to authorize others to use, any reports developed by Engineer for governmental purposes.

ARTICLE 27
SUCCESSORS AND ASSIGNS

This Contract shall be binding upon and inure to the benefit of the parties hereto, their successors, lawful assigns, and legal representatives. Engineer may not assign, sublet or transfer any interest in this Contract, in whole or in part, by operation of law or otherwise, without obtaining the prior written consent of County.

ARTICLE 28
SEVERABILITY

In the event any one or more of the provisions contained in this Contract shall for any reason be held to be invalid, illegal or unenforceable in any respect, then such invalidity, illegality or unenforceability shall not affect any other provision thereof and this Contract shall be construed as if such invalid, illegal or unenforceable provision had never been contained herein.

ARTICLE 29
PRIOR AGREEMENTS SUPERSEDED

This Contract constitutes the sole agreement of the parties hereto, and supersedes any prior understandings or written or oral contracts between the parties respecting the subject matter defined herein. This Contract may only be amended or supplemented by mutual agreement of the parties hereto in writing.

ARTICLE 30
ENGINEER'S ACCOUNTING RECORDS

Engineer agrees to maintain, for a period of three (3) years after final payment under this Contract, detailed records identifying each individual performing the Engineering Services, the date or dates the services were performed, the applicable hourly rates, the total amount billed for each individual and the total amount billed for all persons, records of reimbursable costs and expenses of other providers and provide such other details as may be requested by the County Auditor for verification purposes. Engineer agrees that County or its duly authorized representatives shall, until the expiration of three (3) years after final payment under this Contract, have access to and the right to examine and photocopy any and all books, documents, papers and records of Engineer which are directly pertinent to the services to be performed under this Contract for the purposes of making audits, examinations, excerpts, and transcriptions. Engineer further agrees that County shall have access during normal working hours to all necessary Engineer facilities and shall be provided adequate and appropriate work space in order to conduct audits in compliance with the provisions of this section. County shall give Engineer reasonable advance notice of intended audits.

ARTICLE 31
NOTICES

All notices to either party by the other required under this Contract shall be personally delivered or mailed to such party at the following respective addresses:

County: Hays County Judge
111 E. San Antonio Street, Suite 300
San Marcos, Texas 78666

With copy to: HNTB Corporation
701 Brazos, Suite 450
Austin, Texas 78701
Attn: Michael Weaver

and to: Office of General Counsel
Hays County
111 E. San Antonio Street, Room 202
San Marcos, Texas 78666

Engineer: Nicholas Kehl
Bowman Consulting Group, Ltd.
1120 South Capital of Texas Hwy
Building 3, Suite 220
Austin, Texas 78746

ARTICLE 32
GENERAL PROVISIONS

A. Time is of the Essence. Subject to Article 3 hereof, Engineer understands and agrees that time is of the essence and that any failure of Engineer to complete the Engineering Services for each phase of this Contract within the agreed work schedule set out in the applicable Work Authorization may constitute a material breach of this Contract. Engineer shall be fully responsible for his/her/its delays or for failures to use his/her/its reasonable efforts in accordance with the terms of this Contract and the Engineer's standard of performance as defined herein. Where damage is caused to County due to Engineer's negligent failure to perform County may accordingly withhold, to the extent of such damage, Engineer's payments hereunder without waiver of any of County's additional legal rights or remedies.

B. Force Majeure. Neither County nor Engineer shall be deemed in violation of this Contract if prevented from performing any of their obligations hereunder by reasons for which they are not responsible or circumstances beyond their control. However, notice of such impediment or delay in performance must be timely given, and all reasonable efforts undertaken to mitigate its effects.

C. Enforcement and Venue. This Contract shall be enforceable in San Marcos, Hays County, Texas, and if legal action is necessary by either party with respect to the enforcement of any or all of the terms or conditions herein, exclusive venue for same shall lie in Hays County, Texas. This Contract shall be governed by and construed in accordance with the laws and court decisions of the State of Texas excluding, however, its choice of law rules.

D. Standard of Performance. The standard of care for all professional engineering,

consulting and related services performed or furnished by Engineer and its employees under this Contract will be the care and skill ordinarily used by members of Engineer's profession practicing under the same or similar circumstances at the same time and in the same locality.

E. Opinion of Probable Cost. Any opinions of probable Project cost or probable construction cost provided by Engineer are made on the basis of information available to Engineer and on the basis of Engineer's experience and qualifications and represents its judgment as an experienced and qualified professional engineer. However, since Engineer has no control over the cost of labor, materials, equipment or services furnished by others, or over the contractor(s') methods of determining prices, or over competitive bidding or market conditions, Engineer does not guarantee that proposals, bids or actual Project or construction cost will not vary from opinions of probable cost Engineer prepares.

F. Opinions and Determinations. Where the terms of this Contract provide for action to be based upon opinion, judgment, approval, review, or determination of either party hereto, such terms are not intended to be and shall never be construed as permitting such opinion, judgment, approval, review, or determination to be arbitrary, capricious, or unreasonable.

G. Reports of Accidents. Within 24 hours after Engineer becomes aware of the occurrence of any accident or other event which results in, or might result in, injury to the person or property of any third person (other than an employee of the Engineer), whether or not it results from or involves any action or failure to act by the Engineer or any employee or agent of the Engineer and which arises in any manner from the performance of this Contract, the Engineer shall send a written report of such accident or other event to the County, setting forth a full and concise statement of the facts pertaining thereto. The Engineer shall also immediately send the County a copy of any summons, subpoena, notice, or other documents served upon the Engineer, its agents, employees, or representatives, or received by it or them, in connection with any matter before any court arising in any manner from the Engineer's performance of work under this Contract.

H. Gender, Number and Headings. Words of any gender used in this Contract shall be held and construed to include any other gender, and words in the singular number shall be held to include the plural, unless the context otherwise requires. The headings and section numbers are for convenience only and shall not be considered in interpreting or construing this Contract.

I. Construction. Each party hereto acknowledges that it and its counsel have reviewed this Contract and that the normal rules of construction are not applicable and there will be no presumption that any ambiguities will be resolved against the drafting party in the interpretation of this Contract.

J. Independent Contractor Relationship. Both parties hereto, in the performance of this Contract, shall act in an individual capacity and not as agents, employees, partners, joint ventures or associates of one another. The employees or agents of one party shall not be deemed or construed to be the employees or agents of the other party for any purposes whatsoever.

K. No Waiver of Immunities. Nothing in this Contract shall be deemed to waive,

modify or amend any legal defense available at law or in equity to County, its past or present officers, employees, or agents or employees, nor to create any legal rights or claim on behalf of any third party. County does not waive, modify, or alter to any extent whatsoever the availability of the defense of governmental immunity under the laws of the State of Texas and of the United States.

L. Texas Public Information Act. To the extent, if any, that any provision in this Contract is in conflict with Tex. Gov't Code 552.001 et seq., as amended (the "Public Information Act"), the same shall be of no force or effect. Furthermore, it is expressly understood and agreed that County, its officers and employees may request advice, decisions and opinions of the Attorney General of the State of Texas in regard to the application of the Public Information Act to any items or data furnished to County as to whether or not the same are available to the public. It is further understood that County's officers and employees shall have the right to rely on the advice, decisions and opinions of the Attorney General, and that County, its officers and employees shall have no liability or obligation to any party hereto for the disclosure to the public, or to any person or persons, of any items or data furnished to County by a party hereto, in reliance of any advice, decision or opinion of the Attorney General of the State of Texas.

M. Governing Terms and Conditions. If there is an irreconcilable conflict between the terms and conditions set forth in this Contract or any Contract Amendment and the terms and conditions set forth in any Exhibit, Appendix, Work Authorization or Supplemental Work Authorization to this Contract, the terms and conditions set forth in this Contract or any Contract Amendment shall control over the terms and conditions set forth in any Exhibit, Appendix, Work Authorization or Supplemental Work Authorization to this Contract.

N. Meaning of Day. For purposes of this Contract, all references to a "day" or "days" shall mean a calendar day or calendar days.

O. Appropriation of Funds by County. County believes it has sufficient funds currently available and authorized for expenditure to finance the costs of this Contract. Engineer understands and agrees that County's payment of amounts under this Contract is contingent on the County receiving appropriations or other expenditure authority sufficient to allow the County, in the exercise of reasonable administrative discretion, to continue to make payments under this Contract. It is further understood and agreed by Engineer that County shall have the right to terminate this Contract at the end of any County fiscal year if the governing body of County does not appropriate sufficient funds as determined by County's budget for the fiscal year in question. County may effect such termination by giving written notice of termination to Engineer.

ARTICLE 33
DISPUTE RESOLUTION

Except as otherwise specifically set forth herein, County and Engineer shall work together in good faith to resolve any controversy, dispute or claim between them which arises out of or relates to this Contract, whether stated in tort, contract, statute, claim for benefits, bad faith, professional liability or otherwise ("Claim"). If the parties are unable to resolve the Claim within thirty (30) days following the date in which one party sent written notice of the Claim to the other party, and if a party wishes to pursue the Claim, such Claim shall be addressed through non-binding

mediation. A single mediator engaged in the practice of law, who is knowledgeable about subject matter of this Contract, shall be selected by agreement of the parties and serve as the mediator. Any mediation under this Contract shall be conducted in Hays County, Texas. The mediator's fees shall be borne equally between the parties. Such non-binding mediation is a condition precedent to seeking redress in a court of competent jurisdiction, but this provision shall not preclude either party from filing a lawsuit in a court of competent jurisdiction prior to completing a mediation if necessary to preserve the statute of limitations, in which case such lawsuit shall be stayed pending completion of the mediation process contemplated herein. This provision shall survive the termination of the Contract.

ARTICLE 34
EQUAL OPPORTUNITY IN EMPLOYMENT

During the performance of this Contract and to the extent the Project is a federally funded project, Engineer, for itself, its assignees and successors in interest agrees as follows:

A. Compliance with Regulations. The Engineer shall comply with the Regulations relative to nondiscrimination in Federally-assisted programs of the Department of Transportation (hereinafter, "DOT") Title 49, Code of Federal Regulations, Part 21, as they may be amended from time to time, (hereinafter referred to as the Regulations), which are herein incorporated by reference and made a part of this Contract.

B. Nondiscrimination. The Engineer, with regard to the work performed by it during the Contract, shall not discriminate on the grounds of race, color, or national origin in the selection and retention of subcontractors/subconsultants, including procurements of materials and leases of equipment. The Engineer shall not participate either directly or indirectly in the discrimination prohibited by section 21.5 of the Regulations, including employment practices when the contract covers a program set forth in Appendix B of the Regulations.

C. Solicitations for Subcontracts, Including Procurements of Materials and Equipment. In all solicitations either by competitive bidding or negotiation made by the Engineer for work to be performed under a subcontract, including procurements of materials or leases of equipment, each potential subcontractor/subconsultant or supplier shall be notified by the Engineer of the Engineer's obligations under this Contract and the Regulations relative to nondiscrimination on the grounds of race, color, or national origin.

D. Information and Reports. The Engineer shall provide all information and reports required by the Regulations or directives issued pursuant thereto, and shall permit access to its books, records, accounts, other sources of information, and its facilities as may be determined by the County (referred to in this Article as the "Recipient") or the Texas Department of Transportation to be pertinent to ascertain compliance with such Regulations, orders and instructions. Where any information required of a contractor is in the exclusive possession of another who fails or refuses to furnish this information the Engineer shall so certify to the Recipient, or the Texas Department of Transportation as appropriate, and shall set forth what efforts it has made to obtain the information.

E. Sanctions for Noncompliance. In the event of the Engineer's noncompliance with the nondiscrimination provisions of this contract, the Recipient shall impose such contract sanctions as it or the Texas Department of Transportation may determine to be appropriate, including, but not limited to:

1. withholding of payments to the Engineer under the contract until the Engineer complies, and/or;
2. cancellation, termination or suspension of the Contract, in whole or in part.

F. Incorporation of Provisions. The Engineer shall include the provisions of Subsections (A) through (F) above in every subcontract, including procurements of materials and leases of equipment, unless exempt by the Regulations, or directives issued pursuant thereto. The Engineer shall take such action with respect to any subcontract or procurement as the Recipient or the Texas Department of Transportation may direct as a means of enforcing such provisions including sanctions for non-compliance: Provided, however, that, in the event a contractor becomes involved in, or is threatened with, litigation with a subcontractor/subconsultant or supplier as a result of such direction, the Engineer may request the Recipient to enter into such litigation to protect the interests of the Recipient, and, in addition, the Engineer may request the United States to enter into such litigation to protect the interests of the United States.

SIGNATORY WARRANTY

The undersigned signatory for Engineer hereby represents and warrants that the signatory is an officer of the organization for which he/she has executed this Contract and that he/she has full and complete authority to enter into this Contract on behalf of the firm. The above-stated representations and warranties are made for the purpose of inducing County to enter into this Contract.

IN WITNESS WHEREOF, County has caused this Contract to be signed in its name by its duly authorized County Judge, as has Engineer, signing by and through its duly authorized representative(s), thereby binding the parties hereto, their successors, assigns and representatives for the faithful and full performance of the terms and provisions hereof, to be effective as of the date of the last party's execution below. NO OFFICIAL, EMPLOYEE, AGENT, OR REPRESENTATIVE OF THE COUNTY HAS ANY AUTHORITY, EITHER EXPRESS OR IMPLIED, TO AMEND, TERMINATE OR MODIFY THIS CONTRACT, EXCEPT PURSUANT TO SUCH EXPRESS AUTHORITY AS MAY BE GRANTED BY THE HAYS COUNTY COMMISSIONERS COURT.

COUNTY

HAYS COUNTY, TEXAS

By: _____
Ruben Becerra, County Judge

Date: _____ ____, 20_____

ENGINEER

Bowman Consulting Group, Ltd.

By _____

Printed Name: Nicholas G. Kehl

Title: Principal – Branch Manager

Date: July 6, 2020

LIST OF EXHIBITS ATTACHED

(1) **Exhibit A** Debarment Certification

(2) **Exhibit B** Engineering Services

(3) **Exhibit C** Work Authorization

(4) **Exhibit D** Rate Schedule

(5) **Exhibit E** Certificates of Insurance

EXHIBIT A
DEBARMENT CERTIFICATION

STATE OF TEXAS §
§
COUNTY OF HAYS §

I, the undersigned, being duly sworn or under penalty of perjury under the laws of the United States and the State of Texas, certifies that Engineer and its principals:

(a) Are not presently debarred, suspended, proposed for debarment, declared ineligible or voluntarily excluded from covered transactions by any federal department or agency:

(b) Have not within a three-year period preceding this proposal been convicted of or had a civil judgment rendered against them for commission of fraud or a criminal offense in connection with obtaining, attempting to obtain, or performing a public* transaction or contract under a public transaction; violation of federal or state antitrust statutes or commission of embezzlement, theft, forgery, bribery, falsification or destruction of records, making false statements, or receiving stolen property;

(c) Are not presently indicted for or otherwise criminally or civilly charged by a governmental entity* with commission of any of the offenses enumerated in paragraph (1)(b) of this certification;

(d) Have not within a three-year period preceding this application/proposal had one or more public transactions* terminated for cause or default; and

(e) Have not been disciplined or issued a formal reprimand by any State agency for professional accreditation within the past three years.

Bowman Consulting Group, Ltd.
Name of Firm

Nicholas G. Kehl
Signature of Certifying Official

Nicholas G. Kehl
Printed Name of Certifying Official

Principal – Branch Manager
Title of Certifying Official

July 6, 2020
Date

(2) Where the PROVIDER is unable to certify to any of the statements in this certification, such PROVIDER shall attach an explanation to this certification.

* federal, state, or local

SUBSCRIBED and sworn to before me the undersigned authority by Bowman Consulting group the principle Branch Mgr of Nicholas Kehl, on behalf of said firm.

Brett Croft
Notary Public in and for the
State of Texas

BRETT MICHAEL CROFT
Notary Public, State of Texas
Comm. Expires 02-12-2023
Notary ID 131890177

My commission expires: 02-12-23

EXHIBIT B

ENGINEERING SERVICES

PROJECT UNDERSTANDING

The Project includes reconstruction of approximately 1,900 linear feet of roadway for a new center left turn lane between New Bridge Drive and Waterleaf Boulevard / Woodlands Drive in Hays County, Texas.

100% Design and Bid Documents for the project have been prepared and delivered under previously authorized scope of work. BCG is proposing to provide the following supplemental Scope of Work for the Project with this proposal:

- Revision to Final Construction Plans
- Updated Cost Estimate & Project Manual
- Bid Phase Support
- Construction Administration

EXHIBIT C

WORK AUTHORIZATION

(To Be Completed and Executed After Contract Execution)

PROJECT: RM 150 Center Turn Lane Gap

This Work Authorization is made pursuant to the terms and conditions of the Hays County Contract for Engineering Services, being dated **_____ ____, 2020** and entered into by and between Hays County, Texas, a political subdivision of the State of Texas, (the "County") and **Bowman Consulting Group, Ltd.** (the "Engineer").

Part1. The Engineer will provide the following Engineering Services set forth in **Attachment "B"** of this Work Authorization.

Part 2. The maximum amount payable for services under this Work Authorization without modification is _____.

Part 3. Payment to the Engineer for the services established under this Work Authorization shall be made in accordance with the Contract.

Part 4. This Work Authorization shall become effective on the date of final acceptance and full execution of the parties hereto and shall terminate on **_____ ____, 2020.** The Engineering Services set forth in **Attachment "B"** of this Work Authorization shall be fully completed on or before said date unless extended by a Supplemental Work Authorization.

Part 5. This Work Authorization does not waive the parties' responsibilities and obligations provided under the Contract.

Part 6. County believes it has sufficient funds currently available and authorized for expenditure to finance the costs of this Work Authorization. Engineer understands and agrees that County's payment of amounts under this Work Authorization is contingent on the County receiving appropriations or other expenditure authority sufficient to allow the County, in the exercise of reasonable administrative discretion, to continue to make payments under this Contract. It is further understood and agreed by Engineer that County shall have the right to terminate this Contract at the end of any County fiscal year if the governing body of County does not appropriate sufficient funds as determined by County's budget for the fiscal year in question. County may effect such termination by giving written notice of termination to Engineer.

Part 7. This Work Authorization is hereby accepted and acknowledged below.

EXECUTED this ____ day of _____, 2020.

ENGINEER:	COUNTY:
Bowman Consulting Group, Ltd.	Hays County, Texas
By:_____	By:_____
Signature	Signature
_____	_____
Printed Name	Printed Name
_____	_____
Title	Title

LIST OF ATTACHMENTS

Attachment A - Services to be Provided by County (Not Applicable)

Attachment B – Engineering Services

Attachment C - Work Schedule

Attachment D - Fee Schedule

EXHIBIT D

Fee/Rate Schedule

FEE SCHEDULE SHALL BE INSERTED AT THE TIME OF AGREEMENT/CONTRACT EXECUTION

EXHIBIT E

CERTIFICATES OF INSURANCE

ATTACHED BEHIND THIS PAGE

CERTIFICATE OF LIABILITY INSURANCE

DATE (MM/DD/YYYY): 08/26/2019

THIS CERTIFICATE IS ISSUED AS A MATTER OF INFORMATION ONLY AND CONFERS NO RIGHTS UPON THE CERTIFICATE HOLDER. THIS CERTIFICATE DOES NOT AFFIRMATIVELY OR NEGATIVELY AMEND, EXTEND OR ALTER THE COVERAGE AFFORDED BY THE POLICIES BELOW. THIS CERTIFICATE OF INSURANCE DOES NOT CONSTITUTE A CONTRACT BETWEEN THE ISSUING INSURER(S), AUTHORIZED REPRESENTATIVE OR PRODUCER, AND THE CERTIFICATE HOLDER.

IMPORTANT: If the certificate holder is an ADDITIONAL INSURED, the policy(ies) must have ADDITIONAL INSURED provisions or be endorsed. If SUBROGATION IS WAIVED, subject to the terms and conditions of the policy, certain policies may require an endorsement. A statement on this certificate does not confer rights to the certificate holder in lieu of such endorsement(s).

PRODUCER

Klein Agency, LLC
P.O. Box 219
Timonium MD 21094

CONTACT NAME: Certificates
PHONE (A/C, No, Ext): (410) 832-7600 FAX (A/C, No): (410) 832-1849
E-MAIL ADDRESS: certs@kleinagencyllc.com

INSURER(S) AFFORDING COVERAGE		NAIC #
INSURER A :	Charter Oak Fire Insurance Co	25615
INSURER B :	Travelers Property Casualty Co. of America	25674
INSURER C :	Travelers Indemnity Co. of Am	25666
INSURER D :	RLI Insurance Company	13056
INSURER E :		
INSURER F :		

INSURED

Bowman Consulting Group, Ltd.
12355 Sunrise Valley Drive
Suite 520
Reston VA 20191

COVERAGES **CERTIFICATE NUMBER:** 19-20 All **REVISION NUMBER:**

THIS IS TO CERTIFY THAT THE POLICIES OF INSURANCE LISTED BELOW HAVE BEEN ISSUED TO THE INSURED NAMED ABOVE FOR THE POLICY PERIOD INDICATED. NOTWITHSTANDING ANY REQUIREMENT, TERM OR CONDITION OF ANY CONTRACT OR OTHER DOCUMENT WITH RESPECT TO WHICH THIS CERTIFICATE MAY BE ISSUED OR MAY PERTAIN, THE INSURANCE AFFORDED BY THE POLICIES DESCRIBED HEREIN IS SUBJECT TO ALL THE TERMS, EXCLUSIONS AND CONDITIONS OF SUCH POLICIES. LIMITS SHOWN MAY HAVE BEEN REDUCED BY PAID CLAIMS.

INSR LTR	TYPE OF INSURANCE	ADDL INSD	SUBR WVD	POLICY NUMBER	POLICY EFF (MM/DD/YYYY)	POLICY EXP (MM/DD/YYYY)	LIMITS	
A	[X] COMMERCIAL GENERAL LIABILITY [ ] CLAIMS-MADE [X] OCCUR [X] Contractual Liability GEN'L AGGREGATE LIMIT APPLIES PER: [ ] POLICY [X] PRO-JECT [ ] LOC OTHER:			6306J047645	08/31/2019	08/31/2020	EACH OCCURRENCE DAMAGE TO RENTED PREMISES (Ea occurrence) MED EXP (Any one person) PERSONAL & ADV INJURY GENERAL AGGREGATE PRODUCTS - COMP/OP AGG	$ 1,000,000 $ 1,000,000 $ 10,000 $ 1,000,000 $ 2,000,000 $ 2,000,000 $
B	AUTOMOBILE LIABILITY [X] ANY AUTO OWNED AUTOS ONLY HIRED AUTOS ONLY SCHEDULED AUTOS NON-OWNED AUTOS ONLY			8103N454030	08/31/2019	08/31/2020	COMBINED SINGLE LIMIT (Ea accident) BODILY INJURY (Per person) BODILY INJURY (Per accident) PROPERTY DAMAGE (Per accident)	$ 1,000,000 $ $ $ $
B	[X] UMBRELLA LIAB [X] OCCUR EXCESS LIAB [ ] CLAIMS-MADE DED [X] RETENTION $ 0			CUP6J395074	08/31/2019	08/31/2020	EACH OCCURRENCE AGGREGATE	$ 18,000,000 $ 18,000,000 $
C	WORKERS COMPENSATION AND EMPLOYERS' LIABILITY ANY PROPRIETOR/PARTNER/EXECUTIVE OFFICER/MEMBER EXCLUDED? (Mandatory in NH) Y/N: N If yes, describe under DESCRIPTION OF OPERATIONS below	N / A		UB6J317115	08/31/2019	08/31/2020	[X] PER STATUTE [ ] OTH-ER E.L. EACH ACCIDENT E.L. DISEASE - EA EMPLOYEE E.L. DISEASE - POLICY LIMIT	 $ 1,000,000 $ 1,000,000 $ 1,000,000
D	Professional & Pollution Liability			RDP0037319	08/31/2019	08/31/2020	Each Claim Aggregate	$5,000,000 $10,000,000

DESCRIPTION OF OPERATIONS / LOCATIONS / VEHICLES (ACORD 101, Additional Remarks Schedule, may be attached if more space is required)

If required by an insured written contract, executed prior to any loss, the certificate holder is an Additional Insured on a primary and non-contributory basis under the General and Auto Liability Policies. If required by an insured written contract, executed prior to any loss, Waiver of Subrogation is provided for General, Auto, and Workers Compensation Policies. Umbrella Policy follows form over General, Auto, and Employer's Liability Policies. 30 day notice of cancellation, 10 day for non-payment.

CERTIFICATE HOLDER

* For Proposal Purposes
1234 Main Street
Anytown 12345

CANCELLATION

SHOULD ANY OF THE ABOVE DESCRIBED POLICIES BE CANCELLED BEFORE THE EXPIRATION DATE THEREOF, NOTICE WILL BE DELIVERED IN ACCORDANCE WITH THE POLICY PROVISIONS.

AUTHORIZED REPRESENTATIVE

© 1988-2015 ACORD CORPORATION. All rights reserved.

Hays County
House Bill 89 Verification

I, Nicholas G. Kehl (Person name), the undersigned representative of (Company or Business name) Bowman Consulting Group, Ltd. (hereafter referred to as company) being an adult over the age of eighteen (18) years of age, after being duly sworn by the undersigned notary, do hereby depose and verify under oath that the company named-above, under the provisions of Subtitle F, Title 10, Government Code Chapter 2270:

1. Does not boycott Israel currently; and
2. Will not boycott Israel during the term of the contract.

Pursuant to Section 2270.001, Texas Government Code:

1. *"Boycott Israel" means refusing to deal with, terminating business activities with, or otherwise taking any action that is intended to penalize, inflict economic harm on, or limit commercial relations specifically with Israel, or with a person or entity doing business in Israel or in an Israeli-controlled territory, but does not include an action made for ordinary business purposes; and*
2. *"Company" means a for-profit sole proprietorship, organization, association, corporation, partnership, joint venture, limited partnership, limited liability partnership, or any limited liability company, including a wholly owned subsidiary, majority-owned subsidiary, parent company or affiliate of those entities or business associations that exist to make a profit.*

July 6, 2020
DATE

SIGNATURE OF COMPANY REPRESENTATIVE

On this the 6th day of July, 2020, personally appeared Nicholas Kehl, the above-named person, who after by me being duly sworn, did swear and confirm that the above is true and correct.

NOTARY SEAL

NOTARY SIGNATURE

7-6-20
Date

BRETT MICHAEL CROFT
Notary Public, State of Texas
Comm. Expires 02-12-2023
Notary ID 131890177

Related Party Disclosure Form

Hays County strives to provide financial transparency to its taxpayers. Completion of this form will allow for added transparency into the procurement process by disclosing Vendor relationships with current or former Hays County employees. The existence of a relationship may not present a legal or ethical conflict for a Vendor. However, disclosure will allow for consideration of potential conflicts and/or ways to eliminate conflicts.

A Vendor who Employs any of the following is required to disclose the relationship on this form:

- Current Hays County employee (including elected or appointed official)(Complete Section A)
- Former Hays County employee who has been separated from Hays County for no less than four (4) years (including elected or appointed official) (Complete Section B)
- Person related within the 2nd degree of consanguinity or affinity to either of the above[1] (Complete Section C)

If no known relationships exist, complete Section D.

This form is required to be completed in full and submitted with the proposal package. A submitted proposal package that does not include this completed form will be considered non-responsive and will not be eligible for an award.

Section A: Current Hays County Employee

_____

Employee Name Title

Section B: Former Hays County Employee

_____

Employee Name Title Date of Separation from County

Section C: Person Related to Current or Former Hays County Employee

_____

Employee or Former Employee Name Title

_____

Name of Related Person Title Relationship

Section D: No Known Relationships

If no relationships in accordance with the above exist or are known to exist, provide a written explanation below:

I am not aware of any current, prior, or related Hays County employee employed by Bowman Consulting Group.

Attach additional pages if necessary.

I, the undersigned, hereby certify that the information provided is true and complete to the best of my knowledge.

Bowman Consulting Group, Ltd.
Name of Vendor

Signature of Certifying Official

Principal - Branch Manager
Title of Certifying Official

Nicholas G. Kehl
Printed Name of Certifying Official

7-6-2020
Date

(1)A degree of relationship is determined under Texas Government Code Chapter 573. (as outlined below)

Relationship of Consanguinity				
	1st Degree	**2nd Degree**	**3rd Degree***	**4th Degree***
Person	child or parent	grandchild, sister, brother or grand-parent	great-grandchild, niece, nephew, aunt,* uncle* or great-grandparent	great-great-grandchild, grandniece, grandnephew, first cousin, great aunt,* great uncle* or great-great-grandparent
* An aunt, uncle, great aunt or great uncle is related to a person by consanguinity only if he or she is the sibling of the person's parent or grandparent.				

Relationship of Affinity		
	1st Degree	**2nd Degree**
Person	spouse, mother-in-law, father-in-law, son-in-law, daughter-in-law, stepson, stepdaughter, stepmother or stepfather	brother-in-law, sister-in-law, spouse's grandparent, spouse's grandchild, grandchild's spouse or spouse of grandparent

"Vendor" shall mean any individuals or entity that seeks to enter into a contract with Hays County.

"Employs" shall mean any relationship wherein Vendor has made arrangements to compensate an individual, directly or by way of a business organization in which the individual has a sharehold or ownership interest, even if that arrangement is contractual and/or on an hourly-charge basis.

DRAFT

AGENDA ITEM REQUEST FORM

Hays County Commissioners Court

Tuesdays at 9:00 AM

Request forms are due in Microsoft Word Format via email by 2:00 p.m. on Wednesday.

AGENDA ITEM

Discussion and possible action to authorize the Court to execute a Professional Service Agreement with Cobb, Fendley & Associates, Inc. to provide utility coordination services for RM 967 Safety Turn Lanes (Buda Sports Complex Drive, Hays CISD High School No. 3, and Oak Forest Drive Intersections) in Precinct 2 as part of the Road Bond Program.

ITEM TYPE	MEETING DATE	AMOUNT REQUIRED
ACTION-ROADS	July 21, 2020	$300.000.00

LINE ITEM NUMBER

034-802-96-646.5623_400

AUDITOR USE ONLY

AUDITOR COMMENTS:

PURCHASING GUIDELINES FOLLOWED: YES **AUDITOR REVIEW:** MARISOL VILLARREAL-ALONZO

REQUESTED BY	SPONSOR	CO-SPONSOR
Jerry Borcherding, P.E., Transportation Director	JONES	N/A

SUMMARY

The FM 967 safety turn lane [11-646-034] project will be funded through the 2016 Road Bond Program and is one of the highest priorities in Precinct 2 and in the County. The safety turn lanes at Ball Field and west of FM 1626 would serve the existing school facilities and the proposed new high school site. Cobb, Fendley & Associates, Inc. has been pre-qualified by Hays County for the requested services and was selected by the Commissioners Court to enter into contract negotiations on June 23, 2020. The process to initially select an engineering consultant to negotiate a scope of work and fee proposal, with subsequent action by the Hays County Commissioners Court to approve the contract integrating the negotiated scope of work and fee proposal, follows the process set forth in the Hays County Purchasing Policy and Procedures Manual, revised May 30, 2017.

HAYS COUNTY
CONTRACT FOR ENGINEERING SERVICES

FIRM: **Cobb, Fendley & Associates, Inc.** **("Engineer")**
ADDRESS: **505 E. Huntland Drive, Suite 100**
Austin, Texas 78752
PROJECT: **Utility Coordination Services for RM 967** **("Project")**

THE STATE OF TEXAS §
§
COUNTY OF HAYS §

THIS CONTRACT FOR ENGINEERING SERVICES ("Contract") is made and entered into, effective as the date of the last party's execution hereinbelow, by and between Hays County, Texas, a political subdivision of the State of Texas, whose offices are located at 111 E. San Antonio Street, Suite 300, San Marcos, Texas, 78666 (hereinafter referred to as "County"), and Engineer, and such Contract is for the purpose of contracting for professional engineering services.

RECITALS:

WHEREAS, V.T.C.A., Government Code §2254.002(2)(A)(vii) under Subchapter A entitled "Professional Services Procurement Act" provides for the procurement by counties of services of professional engineers; and

WHEREAS, County and Engineer desire to contract for such professional engineering services; and

WHEREAS, County and Engineer wish to document their agreement concerning the requirements and respective obligations of the parties;

NOW, THEREFORE, WITNESSETH:

That for and in consideration of the mutual promises contained herein and other good and valuable considerations, and the covenants and agreements hereinafter contained to be kept and performed by the respective parties hereto, it is agreed as follows:

ARTICLE 1
CONTRACT DOCUMENTS AND APPLICABLE PROJECT DOCUMENTS

A. Contract Documents. The Contract Documents consist of this Contract, any exhibits attached hereto (which exhibits are hereby incorporated into and made a part of this Contract), any fully executed Work Authorizations; any fully executed Supplemental Work Authorizations and all fully executed Contract Amendments (as defined herein in Article 14) which are subsequently issued. These form the entire contract, and all are as fully a part of this Contract as if attached to this Contract or repeated herein.

B. Project Documents. In addition to any other pertinent and necessary Project documents, the following documents shall be used in the development of the Project:

A. TxDOT 2011 Texas Manual of Uniform Traffic Control Devices for Streets and Highways, including latest revisions
B. Texas Department of Transportation's Standard Specifications for Construction of Highways, Streets, and Bridges, 2014 (English units)
C. National Environmental Policy Act (NEPA)
D. Texas Accessibility Standards (TAS) of the Architectural Barriers Act, Article 9102, Texas Civil Statutes, Effective April 4, 1994, including latest revisions
E. Americans with Disabilities Act (ADA) Regulations
F. U.S. Army Corps Regulations
G. International Building Code, current edition as updated
H. Hays County Design Criteria & Project Development Manual, latest edition
I. Hays County Multi-Corridor Transportation Plan Project Level Environmental Review and Compliance Protocol, latest edition
J. Hays County Protocol for Sustainable Roadsides, latest edition
K. TxDOT Bridge Design Manual - LRFD, latest edition
L. TxDOT Geotechnical Manual, latest edition

ARTICLE 2
NON-COLLUSION; DEBARMENT; AND FINANCIAL INTEREST PROHIBITED

A. Non-collusion. Engineer warrants that he/she/it has not employed or retained any company or persons, other than a bona fide employee working solely for Engineer, to solicit or secure this Contract, and that he/she/it has not paid or agreed to pay any company or engineer any fee, commission, percentage, brokerage fee, gifts, or any other consideration, contingent upon or resulting from the award or making of this Contract. For breach or violation of this warranty, County reserves and shall have the right to annul this Contract without liability or, in its discretion and at its sole election, to deduct from the contract price or compensation, or to otherwise recover, the full amount of such fee, commission, percentage, brokerage fee, gift or contingent fee.

B. Debarment Certification. Engineer must sign the Debarment Certification

enclosed herewith as **Exhibit A**.

C. Financial Interest Prohibited. Engineer covenants and represents that Engineer, his/her/its officers, employees, agents, consultants and subcontractors will have no financial interest, direct or indirect, in the purchase or sale of any product, materials or equipment that will be recommended or required for the construction of the Project.

ARTICLE 3
ENGINEERING SERVICES

Engineer shall perform Engineering Services as identified in **Exhibit B** entitled "Engineering Services."

County will prepare and issue Work Authorizations, in substantially the same form identified and attached hereto as **Exhibit C** and entitled "Work Authorization No. ____", to authorize the Engineer to perform one or more tasks of the Engineering Services. Each Work Authorization will include a description of the work to be performed, a description of the tasks and milestones, a work schedule for the tasks, definite review times by County and Engineer of all Engineering Services and a fee amount agreed upon by the County and Engineer. The amount payable for a Work Authorization shall be supported by the estimated cost of each work task as described in the Work Authorization. The Work Authorization will not waive the Engineer's responsibilities and obligations established in this Contract. The executed Work Authorizations shall become part of this Contract.

All work must be completed on or before the date specified in the Work Authorization. The Engineer shall promptly notify the County of any event which will affect completion of the Work Authorization, although such notification shall not relieve the Engineer from costs or liabilities resulting from delays in completion of the Work Authorization. Should the review times or Engineering Services take longer than shown on the Work Authorization, through no fault of Engineer, Engineer may submit a timely written request for additional time, which shall be subject to the approval of the County. Any changes in a Work Authorization shall be enacted by a written Supplemental Work Authorization before additional costs may be incurred. Any Supplemental Work Authorization must be executed by both parties within the period specified in the Work Authorization.

ARTICLE 4
CONTRACT TERM

A. Term. The Engineer is expected to complete the Engineering Services described herein in accordance with the above described Work Authorizations or any Supplemental Work Authorization related thereto. If Engineer does not perform the Engineering Services in accordance with each applicable Work Authorization or any Supplemental Work Authorization related thereto, then County shall have the right to terminate this Contract as set forth below in Article 20. So long as the County elects not to terminate this Contract, it shall continue from day to day until such time as the Engineering Services are completed in accordance with each applicable Work Authorization or any Supplemental Work Authorization related thereto. Any Engineering Services performed or

costs incurred after the date of termination shall not be eligible for reimbursement. Engineer shall notify County in writing as soon as possible if he/she/it determines, or reasonably anticipates, that the Engineering Services will not be completed in accordance with an applicable Work Authorization or any Supplemental Work Authorization related thereto.

B. Work Authorizations. Engineer acknowledges that each Work Authorization is of critical importance, and agrees to undertake all reasonably necessary efforts to expedite the performance of Engineering Services required herein so that construction of the Project will be commenced and completed as scheduled. In this regard, and subject to adjustments in a particular Work Authorization, as provided in Article 3 herein, Engineer shall proceed with sufficient qualified personnel and consultants necessary to fully and timely accomplish all Engineering Services required under this Contract in a professional manner.

C. Commencement of Engineering Services. After execution of this Contract, Engineer shall not proceed with Engineering Services until Engineer has been thoroughly briefed on the scope of the Project and has been notified in writing by the County to proceed, as provided in Article 8.

ARTICLE 5
COMPENSATION AND EXPENSES

County shall pay and Engineer agrees to accept up to the amount shown below as full compensation for the Engineering Services performed and to be performed under this Contract. The basis of compensation for the services of principals and employees engaged in the performance of the Engineering Services shall be based on the Rate Schedule set forth in the attached **Exhibit D**.

The maximum amount payable under this Contract, without modification, is **Three Hundred Thousand Dollars and Zero Cents ($300,000.00)** (the "Compensation Cap"), provided that any amounts paid or payable shall be solely pursuant to a validly issued Work Authorization or any Supplemental Work Authorization related thereto. In no event may the aggregate amount of compensation authorized under Work Authorizations and Supplemental Work Authorizations exceed the Compensation Cap. The Compensation Cap shall be revised equitably only by written Contract Amendments executed by both parties in the event of a change the overall scope of the Engineering Services set forth in **Exhibit B**, as authorized by County.

The Compensation Cap is based upon all labor and non-labor costs estimated to be required in the performance of the Engineering Services provided for under this Contract. Should the actual costs of all labor and non-labor costs rendered under this Contract be less than the above stated Compensation Cap, then Engineer shall receive compensation for only actual fees and costs of the Engineering Services actually rendered and incurred, which may be less than the above stated Compensation Cap.

The Compensation Cap herein referenced may be adjusted for Additional Engineering Services requested and performed only if approved by a written Contract Amendment signed by both parties.

Engineer shall prepare and submit to County monthly progress reports in sufficient detail to support the progress of the Engineering Services and to support invoices requesting monthly payment. The format for such monthly progress reports and invoices must be in a format acceptable to County. Satisfactory progress of Engineering Services shall be an absolute condition of payment.

Engineer shall be reimbursed for actual non-labor and subcontract expenses incurred in the performance of the services under this Contract at the Engineer's invoice cost. Invoices requesting reimbursement for costs and expenditures related to the Project (reimbursables) must be accompanied by copies of the provider's invoice. The copies of the provider's invoice must evidence the actual costs billed to Engineer without mark-up.

ARTICLE 6
METHOD OF PAYMENT

Payments to Engineer shall be made while Engineering Services are in progress. Engineer shall prepare and submit to County's Road Bond Program Manager, not more frequently than once per month, a progress report as referenced in Article 5 above. Such progress report shall state the percentage of completion of Engineering Services accomplished for an applicable Work Authorization or any Supplemental Work Authorization related thereto during that billing period and to date. This submittal shall also include a progress assessment report in a form acceptable to the County Auditor.

Simultaneous with submission of such progress report, Engineer shall prepare and submit one (1) original of a certified invoice to the County Auditor in a form acceptable to the County Auditor. All invoices submitted to County must, at a minimum, be accompanied by an original complete packet of supporting documentation and time sheets detailing hours worked by staff persons with a description of the work performed by such persons. For Additional Engineering Services performed pursuant to this Contract, a separate invoice or itemization of the Additional Engineering Services must be presented with the same aforementioned requirements.

Payments shall be made by County based upon Engineering Services actually provided and performed. Upon timely receipt and approval of each statement, County shall make a good faith effort to pay the amount which is due and payable within thirty (30) days of the County Auditor's receipt. County reserves the right to reasonably withhold payment pending verification of satisfactory Engineering Services performed. Engineer has the responsibility to submit proof to County, adequate and sufficient in its determination, that tasks of an applicable Work Authorization or any Supplemental Work Authorization related thereto were completed.

The certified statements shall show the total amount earned to the date of submission and shall show the amount due and payable as of the date of the current statement. Final payment does not relieve Engineer of the responsibility of correcting any errors and/or omissions resulting from his/her/its negligence.

Upon submittal of the initial invoice, Engineer shall provide the County Auditor with an Internal Revenue Form W-9, Request for Taxpayer Identification Number and Certification that is complete in compliance with the Internal Revenue Code, its rules and regulations.

ARTICLE 7
PROMPT PAYMENT POLICY

In accordance with Chapter 2251, V.T.C.A., Texas Government Code, payment to Engineer will be made within thirty (30) days of the day on which the performance of services was complete, or within thirty (30) days of the day on which the County Auditor receives a correct invoice for services, whichever is later.

Engineer may charge a late fee (fee shall not be greater than that which is permitted by Texas law) for payments not made in accordance with this prompt payment policy; however, this policy does not apply in the event:

A. There is a bona fide dispute between County and Engineer concerning the supplies, materials, or equipment delivered or the services performed that causes the payment to be late; or

B. The terms of a federal contract, grant, regulation, or statute prevent County from making a timely payment with federal funds; or

C. There is a bona fide dispute between Engineer and a subcontractor/subconsultant or between a subcontractor/subconsultant and its supplier concerning supplies, materials, or equipment delivered or the Engineering Services performed which causes the payment to be late; or

D. The invoice is not mailed to the County Auditor in strict accordance with instructions, if any, on the purchase order, or this Contract or other such contractual agreement.

The County Auditor shall document to Engineer the issues related to disputed invoices within ten (10) calendar days of receipt of such invoice. Any non-disputed invoices shall be considered correct and payable per the terms of Chapter 2251, V.T.C.A., Texas Government Code.

ARTICLE 8
COMMENCEMENT OF ENGINEERING SERVICES

The Engineer shall not proceed with any task of the Engineering Services until Engineer has been thoroughly briefed on the scope of the Project and instructed, in writing by the County, to proceed with the applicable Engineering Services. The County shall not be responsible for work performed or costs incurred by Engineer related to any task for which a Work Authorization or a Supplemental Work Authorization related thereto has not been issued and signed by both parties. Engineer shall not be required to perform any work for which a Work Authorization or a Supplemental Work Authorization related thereto has not been issued and signed by both parties.

ARTICLE 9
PROJECT TEAM

County's Designated Representative for purposes of this Contract is as follows:

County's Road Bond Program Manager
Attn: Michael Weaver
HNTB Corporation
701 Brazos, Suite 450
Austin, Texas 78701

County shall have the right, from time to time, to change the County's Designated Representative by giving Engineer written notice thereof. With respect to any action, decision or determination which is to be taken or made by County under this Contract, the County's Designated Representative may take such action or make such decision or determination or shall notify Engineer in writing of an individual responsible for and capable of taking such action, decision or determination and shall forward any communications and documentation to such individual for response or action. Actions, decisions or determinations by the County's Designated Representative on behalf of County shall be done in his or her reasonable business judgment unless express standards or parameters therefor are included in this Contract, in which case, actions taken by the County's Designated Representative shall be in accordance with such express standards or parameters. Any consent, approval, decision or determination hereunder by the County's Designated Representative shall be binding on County; *provided, however,* the County's Designated Representative shall not have any right to modify, amend or terminate this Contract, an Executed Work Authorization, an executed Supplemental Work Authorization or executed Contract Amendment. County's Designated Representative shall not have any authority to execute a Contract Amendment, Work Authorization or any Supplemental Work Authorization unless otherwise granted such authority by the Hays County Commissioners Court.

Engineer's Designated Representative for purposes of this Contract is as follows:

Cobb, Fendley & Associates, Inc.
Attn: Sandra G. Khoury, P.E.
505 E Huntland Drive, Suite 100
Austin, Texas 78752

Engineer shall have the right, from time to time, to change the Engineer's Designated Representative by giving County written notice thereof. With respect to any action, decision or determination which is to be taken or made by Engineer under this Contract, the Engineer's Designated Representative may take such action or make such decision or determination or shall notify County in writing of an individual responsible for and capable of taking such action, decision or determination and shall forward any communications and documentation to such individual for response or action. Actions, decisions or determinations by the Engineer's Designated Representative on behalf of Engineer shall be done in his or her reasonable business judgment unless express standards or parameters therefor are included in this Contract, in which case, actions taken by the Engineer's Designated Representative shall be in accordance with such

express standards or parameters. Any consent, approval, decision or determination hereunder by the Engineer's Designated Representative shall be binding on Engineer. Engineer's Designated Representative shall have the right to modify, amend and execute Work Authorizations, Supplemental Work Authorizations and Contract Amendments on behalf of Engineer.

ARTICLE 10
PROGRESS EVALUATION

Engineer shall, from time to time during the progress of the Engineering Services, confer with County at County's election. Engineer shall prepare and present such information as may be pertinent and necessary, or as may be reasonably requested by County, in order for County to evaluate features of the Engineering Services. At the request of County or Engineer, conferences shall be provided at Engineer's office, the offices of County, or at other locations designated by County. When requested by County, such conferences shall also include evaluation of the Engineering Services. County may, from time to time, require Engineer to appear and provide information to the Hays County Commissioners Court.

Should County determine that the progress in Engineering Services does not satisfy an applicable Work Authorization or any Supplemental Work Authorization related thereto, then County shall review same with Engineer to determine corrective action required.

Engineer shall promptly advise County in writing of events which have or may have a significant impact upon the progress of the Engineering Services, including but not limited to the following:

A. Problems, delays, adverse conditions which may materially affect the ability to meet the objectives of an applicable Work Authorization or any Supplemental Work Authorization related thereto, or preclude the attainment of Project Engineering Services units by established time periods; and such disclosure shall be accompanied by statement of actions taken or contemplated, and County assistance needed to resolve the situation, if any; and

B. Favorable developments or events which enable meeting goals sooner than anticipated in relation to an applicable Work Authorization's or any Supplemental Work Authorization related thereto.

ARTICLE 11
SUSPENSION

Should County desire to suspend the Engineering Services, but not to terminate this Contract, then such suspension may be effected by County giving Engineer thirty (30) calendar days' verbal notification followed by written confirmation to that effect. Such thirty-day notice may be waived in writing by agreement and signature of both parties. The Engineering Services may be reinstated and resumed in full force and effect within sixty (60) days of receipt of written notice from County to resume the Engineering Services. Such sixty-day (60) notice may be waived in writing by agreement and signature of both parties. If this Contract is suspended for more than thirty (30) days, Engineer shall have the option of terminating this Contract and, in the event, Engineer shall be compensated for all Engineering Services performed and reimbursable expenses incurred, provided such Engineering Services and reimbursable expenses have been previously authorized and approved by County, to the effective date of suspension.

If County suspends the Engineering Services, the contract period as determined in Article 4, and the Work Authorization or any Supplemental Work Authorization related thereto, shall be extended for a time period equal to the suspension period.

County assumes no liability for Engineering Services performed or costs incurred prior to the date authorized by County for Engineer to begin Engineering Services, and/or during periods when Engineering Services is suspended, and/or subsequent to the completion date.

ARTICLE 12
ADDITIONAL ENGINEERING SERVICES

If Engineer forms a reasonable opinion that any work he/she/it has been directed to perform is beyond the overall scope of this Contract, as set forth in **Exhibit B,** and as such constitutes extra work ("Additional Engineering Services"), he/she/it shall promptly notify County in writing. In the event County finds that such work does constitute Additional Engineering Services, County shall so advise Engineer and a written Contract Amendment will be executed between the parties as provided in Article 14. Any increase to the Compensation Cap due to Additional Engineering Services must be set forth in such Contract Amendment. Engineer shall not perform any proposed Additional Engineering Services nor incur any additional costs prior to the execution, by both parties, of a written Contract Amendment. Following the execution of a Contract Amendment that provides for Additional Engineering Services, a written Work Authorization, which sets forth the Additional Engineering Services to be performed, must be executed by the parties. County shall not be responsible for actions by Engineer nor for any costs incurred by Engineer relating to Additional Engineering Services not directly associated with the performance of the Engineering Services authorized in this Contract, by a fully executed Work Authorization or a fully executed Contract Amendment thereto.

ARTICLE 13
CHANGES IN COMPLETED ENGINEERING SERVICES

If County deems it necessary to request changes to previously satisfactorily completed

Engineering Services or parts thereof which involve changes to the original Engineering Services or character of Engineering Services under this Contract, then Engineer shall make such revisions as requested and as directed by County. Such revisions shall be considered as Additional Engineering Services and paid for as specified under Article 12.

Engineer shall make revisions to Engineering Services authorized hereunder as are necessary to correct errors appearing therein, when required to do so by County. No additional compensation shall be due for such Engineering Services.

ARTICLE 14
CONTRACT AMENDMENTS

The terms set out in this Contract may be modified by a written fully executed Contract Amendment. Changes and modifications to a fully executed Work Authorization shall be made in the form of a Supplemental Work Authorization. To the extent that such changes or modifications to a Work Authorization do not also require modifications to the terms of this Contract (i.e. changes to the overall scope of Engineering Services set forth in **Exhibit B**, modification of the Compensation Cap, etc.) a Contract Amendment will not be required.

ARTICLE 15
USE OF DOCUMENTS

All documents, including but not limited to drawings, specifications and data or programs stored electronically, (hereinafter referred to as "Engineering Work Products") prepared by Engineer and its subcontractors/subconsultants are related exclusively to the services described in this Contract and are intended to be used with respect to this Project. However, it is expressly understood and agreed by and between the parties hereto that all of Engineer's designs under this Contract (including but not limited to tracings, drawings, estimates, specifications, investigations, studies and other documents, completed or partially completed), shall be the property of County to be thereafter used in any lawful manner as County elects. Any such subsequent use made of documents by County shall be at County's sole risk and without liability to Engineer.

By execution of this Contract and in confirmation of the fee for services to be paid under this Contract, Engineer hereby conveys, transfers and assigns to County all rights under the Federal Copyright Act of 1976 (or any successor copyright statute), as amended, all common law copyrights and all other intellectual property rights acknowledged by law in the Project Designs and work product developed under this Contract. Copies may be retained by Engineer. Engineer shall be liable to County for any loss or damage to any such documents while they are in the possession of or while being worked upon by Engineer or anyone connected with Engineer, including agents, employees, Engineers or subcontractors/subconsultants. All documents so lost or damaged shall be replaced or restored by Engineer without cost to County.

Upon execution of this Contract, Engineer grants to County permission to reproduce Engineer's work and documents for purposes of constructing, using and maintaining the Project, provided that County shall comply with its obligations, including prompt payment of all sums when due, under this Contract. Engineer shall obtain similar permission from Engineer's

subcontractors/subconsultants consistent with this Contract. If and upon the date Engineer is adjudged in default of this Contract, County is permitted to authorize other similarly credentialed design professionals to reproduce and, where permitted by law, to make changes, corrections or additions to the work and documents for the purposes of completing, using and maintaining the Project.

County shall not assign, delegate, sublicense, pledge or otherwise transfer any permission granted herein to another party without the prior written consent of Engineer. However, County shall be permitted to authorize the contractor, subcontractors and material or equipment suppliers to reproduce applicable portions of the Engineering Work Products appropriate to and for use in the execution of the Work. Submission or distribution of Engineering Work Products to meet official regulatory requirements or for similar purposes in connection with the Project is permitted. Any unauthorized use of the Engineering Work Products shall be at County's sole risk and without liability to Engineer and its Engineers.

Prior to Engineer providing to County any Engineering Work Products in electronic form or County providing to Engineer any electronic data for incorporation into the Engineering Work Products, County and Engineer shall by separate written contract set forth the specific conditions governing the format of such Engineering Work Products or electronic data, including any special limitations not otherwise provided in this Contract. Any electronic files are provided by Engineer for the convenience of County, and use of them is at County's sole risk. In the case of any defects in electronic files or any discrepancies between them and any hardcopy of the same documents prepared by Engineer, the hardcopy shall prevail. Only printed copies of documents conveyed by Engineer shall be relied upon.

Engineer shall have no liability for changes made to the drawings by other engineers subsequent to the completion of the Project. Any such change shall be sealed by the engineer making that change and shall be appropriately marked to reflect what was changed or modified.

ARTICLE 16
PERSONNEL, EQUIPMENT AND MATERIAL

Engineer shall furnish and maintain, at its own expense, quarters for the performance of all Engineering Services, and adequate and sufficient personnel and equipment to perform the Engineering Services as required. All employees of Engineer shall have such knowledge and experience as will enable them to perform the duties assigned to them. Any employee of Engineer who, in the reasonable opinion of County, is incompetent or whose conduct becomes detrimental to the Engineering Services shall immediately be removed from association with the Project when so instructed by County. Engineer certifies that it presently has adequate qualified personnel in its employment for performance of the Engineering Services required under this Contract, or will obtain such personnel from sources other than County. Engineer may not change the Project Manager without prior written consent of County.

ARTICLE 17
SUBCONTRACTING

Engineer shall not assign, subcontract or transfer any portion of the Engineering Services under this Contract without prior written approval from County. All subcontracts shall include the provisions required in this Contract. No subcontract shall relieve Engineer of any responsibilities under this Contract.

ARTICLE 18
REVIEW OF ENGINEERING SERVICES

Engineer's Engineering Services will be reviewed by County under its applicable technical requirements and procedures.

A. Completion. Reports, plans, specifications, and supporting documents shall be submitted by Engineer on or before the dates specified in the applicable Work Authorization or Supplemental Work Authorization related thereto. Upon receipt of same, the submission shall be checked for completion. "Completion" or "Complete" shall be defined as all of the required items, as set out in the applicable Work Authorization, have been included in compliance with the requirements of this Contract. The completeness of any Engineering Services submitted to County shall be determined by County within thirty (30) days of such submittal and County shall notify Engineer in writing within such thirty (30) day period if such Engineering Services have been found to be incomplete. If the submission is Complete, County shall notify Engineer and County's technical review process will begin.

If the submission is not Complete, County shall notify Engineer, who shall perform such professional services as are required to complete the Engineering Services and resubmit it to County. This process shall be repeated until a submission is Complete.

B. Acceptance. County shall review the completed Engineering Services for compliance with this Contract. If necessary, the completed Engineering Services shall be returned to Engineer, who shall perform any required Engineering Services and resubmit it to County. This process shall be repeated until the Engineering Services are Accepted. "Acceptance" or "Accepted" shall mean that in the County's reasonable opinion, substantial compliance with the requirements of this Contract has been achieved.

C. Final Approval. After Acceptance, Engineer shall perform any required modifications, changes, alterations, corrections, redesigns, and additional work necessary to receive Final Approval by the County. "Final Approval" in this sense shall mean formal recognition that the Engineering Services have been fully carried out.

D. Errors and Omissions. After Final Approval, Engineer shall, without additional compensation, perform any work required as a result of Engineer's development of the work which is found to be in error or omission due to Engineer's negligence. However, any work required or

occasioned for the convenience of County after Final Approval shall be paid for as Additional Engineering Services.

E. Disputes Over Classifications. In the event of any dispute over the classification of Engineer's Engineering Services as Complete, Accepted, or having attained Final Approved under this Contract, the decision of the County shall be final and binding on Engineer, subject to any civil remedy or determination otherwise available to the parties and deemed appropriate by the parties.

F. County's Reliance on Engineer. ENGINEER'S DUTIES AS SET FORTH HEREIN SHALL AT NO TIME BE IN ANY WAY DIMINISHED BY REASON OF ANY REVIEW, EVALUATION OR APPROVAL BY THE COUNTY NOR SHALL THE ENGINEER BE RELEASED FROM ANY LIABILITY BY REASON OF SUCH REVIEW, EVALUATION OR APPROVAL BY THE COUNTY, IT BEING UNDERSTOOD THAT THE COUNTY AT ALL TIMES IS ULTIMATELY RELYING UPON THE ENGINEER'S SKILL, ABILITY AND KNOWLEDGE IN PERFORMING THE ENGINEERING SERVICES REQUIRED HEREUNDER.

ARTICLE 19
VIOLATION OF CONTRACT TERMS/BREACH OF CONTRACT

Violation of contract terms or breach of contract by Engineer shall be grounds for termination of this Contract, and any increased costs arising from Engineer's default, breach of contract, or violation of contract terms shall be paid by Engineer.

ARTICLE 20
TERMINATION

This Contract may be terminated as set forth below.

A. By mutual agreement and consent, in writing, of both parties.

B. By County, by notice in writing to Engineer, as a consequence of failure by Engineer to perform the Engineering Services set forth herein in a satisfactory manner.

C. By either party, upon the failure of the other party to fulfill its obligations as set forth herein.

D. By County, for reasons of its own and not subject to the mutual consent of Engineer, upon not less than thirty (30) days' written notice to Engineer.

E. By satisfactory completion of all Engineering Services and obligations described herein.

Should County terminate this Contract as herein provided, no fees other than fees due and payable at the time of termination plus reimbursable expenses incurred shall thereafter be paid to Engineer. In determining the value of the Engineering Services performed by Engineer prior to termination, County shall be the sole judge. Compensation for Engineering Services at termination will be based on a percentage of the Engineering Services completed at that time. Should County terminate this Contract under Subsection (D) immediately above, then the amount

charged during the thirty-day notice period shall not exceed the amount charged during the preceding thirty (30) days.

If Engineer defaults in the performance of this Contract or if County terminates this Contract for fault on the part of Engineer, then County shall give consideration to the actual costs incurred by Engineer in performing the Engineering Services to the date of default, the amount of Engineering Services required which was satisfactorily completed to date of default, the value of the Engineering Services which are usable to County, the cost to County of employing another firm to complete the Engineering Services required and the time required to do so, and other factors which affect the value to County of the Engineering Services performed at the time of default.

The termination of this Contract and payment of an amount in settlement as prescribed above shall extinguish all rights, duties, and obligations of County under this Contract. If the termination of this Contract is due to the failure of Engineer to fulfill his/her/its contractual obligations, then County may take over the Project and prosecute the Engineering Services to completion. In such case, Engineer shall be liable to County for any additional and reasonable costs incurred by County.

Engineer shall be responsible for the settlement of all contractual and administrative issues arising out of any procurements made by Engineer in support of the Engineering Services under this Contract.

ARTICLE 21
COMPLIANCE WITH LAWS

A. Compliance. Engineer shall comply with all applicable federal, state and local laws, statutes, codes, ordinances, rules and regulations, and the orders and decrees of any court, or administrative bodies or tribunals in any manner affecting the performance of this Contract, including without limitation, minimum/maximum salary and wage statutes and regulations, and licensing laws and regulations. Engineer shall furnish County with satisfactory proof of his/her/its compliance.

Engineer shall further obtain all permits and licenses required in the performance of the Engineering Services contracted for herein.

B. Taxes. Engineer will pay all taxes, if any, required by law arising by virtue of the Engineering Services performed hereunder. County is qualified for exemption pursuant to the provisions of Section 151.309 of the Texas Limited Sales, Excise, and Use Tax Act.

ARTICLE 22
INDEMNIFICATION

ENGINEER AGREES, TO THE FULLEST EXTENT PERMITTED BY LAW, TO INDEMNIFY AND HOLD THE COUNTY HARMLESS FROM AND AGAINST ANY AND ALL LIABILITIES, LOSSES, PENALTIES, JUDGMENTS, CLAIMS, LAWSUITS, DAMAGES, COSTS AND EXPENSES, INCLUDING, BUT NOT LIMITED

TO, ATTORNEYS' FEES, ("LOSSES") TO THE EXTENT SUCH LOSSES ARE CAUSED BY OR RESULTS FROM A NEGLIGENT ACT OR OMISSION, NEGLIGENCE, OR INTENTIONAL TORT COMMITTED BY ENGINEER, ENGINEER'S EMPLOYEES, AGENTS, OR ANY OTHER PERSON OR ENTITY UNDER CONTRACT WITH ENGINEER INCLUDING, WITHOUT LIMITATION, ENGINEER'S SUBCONSULTANTS, OR ANY OTHER ENTITY OVER WHICH ENGINEER EXERCISES CONTROL.

ENGINEER FURTHER AGREES, TO THE FULLEST EXTENT PERMITTED BY LAW, TO INDEMNIFY AND HOLD THE COUNTY HARMLESS FROM ANY AND ALL LIABILITIES, LOSSES, PENALTIES, JUDGMENTS, CLAIMS, LAWSUITS, DAMAGES, COSTS AND EXPENSES, INCLUDING, BUT NOT LIMITED TO, ATTORNEYS' FEES, ("LOSSES") TO THE EXTENT SUCH LOSSES ARE CAUSED BY OR RESULTS FROM ENGINEER'S FAILURE TO PAY ENGINEER'S EMPLOYEES, SUBCONTRACTORS, SUBCONSULTANTS, OR SUPPLIERS, IN CONNECTION WITH ANY OF THE WORK PERFORMED OR TO BE PERFORMED UNDER THIS CONTRACT BY ENGINEER.

ENGINEER FURTHER AGREES TO INDEMNIFY AND HOLD THE COUNTY HARMLESS FROM ANY AND ALL LIABILITIES, LOSSES, PENALTIES, CLAIMS, LAWSUITS, DAMAGES, COSTS AND EXPENSES, INCLUDING, BUT NOT LIMITED TO, ATTORNEYS' FEES, ("LOSSES") TO THE EXTENT SUCH LOSSES ARE CAUSED BY OR RESULTS FROM THE INFRINGEMENT OF ANY INTELLECTUAL PROPERTY ARISING OUT OF THE USE OF ANY PLANS, DESIGN, DRAWINGS, OR SPECIFICATIONS FURNISHED BY ENGINEER IN THE PERFORMANCE OF THIS CONTRACT.

THE LIMITS OF INSURANCE REQUIRED IN THIS CONTRACT AND/OR THE CONTRACT DOCUMENTS SHALL NOT LIMIT ENGINEER'S OBLIGATIONS UNDER THIS SECTION. THE TERMS AND CONDITIONS CONTAINED IN THIS SECTION SHALL SURVIVE THE TERMINATION OF THE CONTRACT AND/OR CONTRACT DOCUMENTS OR THE SUSPENSION OF THE WORK HEREUNDER. TO THE EXTENT THAT ANY LIABILITIES, PENALTIES, DEMANDS, CLAIMS, LAWSUITS, LOSSES, DAMAGES, COSTS AND EXPENSES ARE CAUSED IN PART BY THE ACTS OF THE COUNTY OR THIRD PARTIES FOR WHOM ENGINEER IS NOT LEGALLY LIABLE, ENGINEER'S OBLIGATIONS SHALL BE IN PROPORTION TO ENGINEER'S FAULT. THE OBLIGATIONS HEREIN SHALL ALSO EXTEND TO ANY ACTIONS BY THE COUNTY TO ENFORCE THIS INDEMNITY OBLIGATION.

IN THE EVENT THAT CONTRACTORS INITIATE LITIGATION AGAINST THE COUNTY IN WHICH THE CONTRACTOR ALLEGES DAMAGES AS A RESULT OF ANY NEGLIGENT ACTS, ERRORS OR OMISSIONS OF ENGINEER, ITS EMPLOYEES, AGENTS, SUBCONTRACTORS, SUBCONSULTANTS, OR SUPPLIERS, OR OTHER ENTITIES OVER WHICH ENGINEER EXERCISES CONTROL, INCLUDING, BUT NOT LIMITED TO, DEFECTS, ERRORS, OR OMISSIONS, THEN THE COUNTY SHALL HAVE THE RIGHT TO JOIN ENGINEER IN ANY SUCH PROCEEDINGS AT THE COUNTY'S COST. ENGINEER SHALL ALSO HOLD THE COUNTY HARMLESS AND INDEMNIFY THE COUNTY TO THE EXTENT THAT ENGINEER, ANY OF ITS EMPLOYEES, AGENTS, SUBCONTRACTORS, SUBCONSULTANTS, OR SUPPLIERS, OR OTHER ENTITIES OVER WHICH ENGINEER EXERCISES CONTROL, CAUSED SUCH DAMAGES TO CONTRACTOR, INCLUDING ANY AND ALL COSTS AND ATTORNEYS' FEES INCURRED BY THE COUNTY IN CONNECTION WITH THE DEFENSE OF ANY CLAIMS WHERE ENGINEER, ITS EMPLOYEES, AGENTS, SUBCONTRACTORS, SUBCONSULTANTS, OR SUPPLIERS, OR OTHER ENTITIES OVER WHICH ENGINEER EXERCISES CONTROL, ARE ADJUDICATED AT FAULT.

ARTICLE 23
ENGINEER'S RESPONSIBILITIES

Engineer shall be responsible for the accuracy of his/her/its Engineering Services and shall promptly make necessary revisions or corrections to its work product resulting from errors, omissions, or negligent acts, and same shall be done without compensation. County shall determine Engineer's responsibilities for all questions arising from design errors and/or omissions, subject to the dispute resolution provisions of Article 33. Engineer shall not be relieved of responsibility for subsequent correction of any such errors or omissions in its work product, or for clarification of any ambiguities until after the construction phase of the Project has been completed.

ARTICLE 24
ENGINEER'S SEAL

The responsible engineer shall sign, seal and date all appropriate engineering submissions to County in accordance with the Texas Engineering Practice Act and the rules of the State Board of Registration for Professional Engineers.

ARTICLE 25
INSURANCE

Engineer must comply with the following insurance requirements at all times during this Contract:

A. Coverage Limits. Engineer, at Engineer's sole cost, shall purchase and maintain during the entire term while this Contract is in effect the following insurance:

1. Worker's Compensation in accordance with statutory requirements.
2. Commercial General Liability Insurance with a combined minimum Bodily Injury and Property Damage limits of $1,000,000.00 per occurrence and $2,000,000.00 in the aggregate.
3. Automobile Liability Insurance for all owned, non-owned, and hired vehicles with combined minimum limits for Bodily Injury and Property Damage limits of $500,000.00 per occurrence and $1,000,000.00 in the aggregate.
4. Professional Liability Errors and Omissions Insurance in the amount of $2,000,000.00 per claim.

B. Additional Insureds; Waiver of Subrogation. County, its directors, officers and employees shall be added as additional insureds under policies listed under (2) and (3) above, and on those policies where County, its directors, officers and employees are additional insureds, such insurance shall be primary and any insurance maintained by County shall be excess and not contribute with it. Such policies shall also include waivers of subrogation in favor of County.

C. Premiums and Deductible. Engineer shall be responsible for payment of premiums for all of the insurance coverages required under this section. Engineer further agrees

that for each claim, suit or action made against insurance provided hereunder, with respect to all matters for which the Engineer is responsible hereunder, Engineer shall be solely responsible for all deductibles and self-insured retentions. Any deductibles or self-insured retentions over $50,000 in the Engineer's insurance must be declared and approved in writing by County in advance.

D. Commencement of Work. Engineer shall not commence any field work under this Contract until he/she/it has obtained all required insurance and such insurance has been approved by County. As further set out below, Engineer shall not allow any subcontractor/subconsultant(s) to commence work to be performed in connection with this Contract until all required insurance has been obtained and approved and such approval shall not be unreasonably withheld. Approval of the insurance by County shall not relieve or decrease the liability of Engineer hereunder.

E. Insurance Company Rating. The required insurance must be written by a company approved to do business in the State or Texas with a financial standing of at least an A-rating, as reflected in Best's insurance ratings or by a similar rating system recognized within the insurance industry at the time the policy is issued.

F. Certification of Coverage. Engineer shall furnish County with a certification of coverage issued by the insurer. Engineer shall not cause any insurance to be canceled nor permit any insurance to lapse. **In addition to any other notification requires set forth hereunder, Engineer shall also notify County, within twenty-four (24) hours of receipt, of any notices of expiration, cancellation, non-renewal, or material change in coverage it receives from its insurer.**

G. No Arbitration. It is the intention of the County and agreed to and hereby acknowledged by the Engineer, that no provision of this Contract shall be construed to require the County to submit to mandatory arbitration in the settlement of any claim, cause of action or dispute, except as specifically required in direct connection with an insurance claim or threat of claim under an insurance policy required hereunder or as may be required by law or a court of law with jurisdiction over the provisions of this Contract.

H. Subcontractor/Subconsultant's Insurance. Without limiting any of the other obligations or liabilities of Engineer, Engineer shall require each subcontractor/subconsultant performing work under this Contract (to the extent a subcontractor/subconsultant is allowed by County) to maintain during the term of this Contract, at the subcontractor/subconsultant's own expense, the same stipulated minimum insurance required in this Article above, including the required provisions and additional policy conditions as shown below in this Article.

Engineer shall obtain and monitor the certificates of insurance from each subcontractor/subconsultant in order to assure compliance with the insurance requirements. Engineer must retain the certificates of insurance for the duration of this Contract, and shall have the responsibility of enforcing these insurance requirements among its subcontractor/subconsultants. County shall be entitled, upon request and without expense, to receive copies of these certificates of insurance.

I. Insurance Policy Endorsements. Each insurance policy shall include the following conditions by endorsement to the policy:

1. County shall be notified thirty (30) days prior to the expiration, cancellation, non-renewal or any material change in coverage, and such notice thereof shall be given to County by certified mail to:

   Hays County Auditor
   c/o: Vickie G. Dorsett
   712 S. Stagecoach Trail, Suite 1071
   San Marcos, Texas 78666

   With copy to: HNTB Corporation
   Attn: Michael Weaver
   701 Brazos, Suite 450
   Austin, Texas 78701

2. The policy clause "Other Insurance" shall not apply to any insurance coverage currently held by County, to any such future coverage, or to County's Self-Insured Retentions of whatever nature.

J. Cost of Insurance. The cost of all insurance required herein to be secured and maintained by Engineer shall be borne solely by Engineer, with certificates of insurance evidencing such minimum coverage in force to be filed with County. Such Certificates of Insurance are evidenced as **Exhibit F** herein entitled "Certificates of Insurance."

ARTICLE 26
COPYRIGHTS

County shall have the royalty-free, nonexclusive and irrevocable right to reproduce, publish or otherwise use, and to authorize others to use, any reports developed by Engineer for governmental purposes.

ARTICLE 27
SUCCESSORS AND ASSIGNS

This Contract shall be binding upon and inure to the benefit of the parties hereto, their successors, lawful assigns, and legal representatives. Engineer may not assign, sublet or transfer any interest in this Contract, in whole or in part, by operation of law or otherwise, without obtaining the prior written consent of County.

ARTICLE 28
SEVERABILITY

In the event any one or more of the provisions contained in this Contract shall for any reason be held to be invalid, illegal or unenforceable in any respect, then such invalidity, illegality or unenforceability shall not affect any other provision thereof and this Contract shall be construed as if such invalid, illegal or unenforceable provision had never been contained herein.

ARTICLE 29
PRIOR AGREEMENTS SUPERSEDED

This Contract constitutes the sole agreement of the parties hereto, and supersedes any prior understandings or written or oral contracts between the parties respecting the subject matter defined herein. This Contract may only be amended or supplemented by mutual agreement of the parties hereto in writing.

ARTICLE 30
ENGINEER'S ACCOUNTING RECORDS

Engineer agrees to maintain, for a period of three (3) years after final payment under this Contract, detailed records identifying each individual performing the Engineering Services, the date or dates the services were performed, the applicable hourly rates, the total amount billed for each individual and the total amount billed for all persons, records of reimbursable costs and expenses of other providers and provide such other details as may be requested by the County Auditor for verification purposes. Engineer agrees that County or its duly authorized representatives shall, until the expiration of three (3) years after final payment under this Contract, have access to and the right to examine and photocopy any and all books, documents, papers and records of Engineer which are directly pertinent to the services to be performed under this Contract for the purposes of making audits, examinations, excerpts, and transcriptions. Engineer further agrees that County shall have access during normal working hours to all necessary Engineer facilities and shall be provided adequate and appropriate work space in order to conduct audits in compliance with the provisions of this section. County shall give Engineer reasonable advance notice of intended audits.

ARTICLE 31
NOTICES

All notices to either party by the other required under this Contract shall be personally delivered or mailed to such party at the following respective addresses:

County: Hays County Judge
111 E. San Antonio Street, Suite 300
San Marcos, Texas 78666

With copy to: HNTB Corporation
701 Brazos, Suite 450
Austin, Texas 78701
Attn: Michael Weaver

and to: Office of General Counsel
Hays County
111 E. San Antonio Street, Room 202
San Marcos, Texas 78666

Engineer: **Cobb, Fendley & Associates, Inc.**
Attn: Sandra G. Khoury, P.E.
505 E. Huntland Drive, Suite 100
Austin, Texas 78752

ARTICLE 32
GENERAL PROVISIONS

A. Time is of the Essence. Subject to Article 3 hereof, Engineer understands and agrees that time is of the essence and that any failure of Engineer to complete the Engineering Services for each phase of this Contract within the agreed work schedule set out in the applicable Work Authorization may constitute a material breach of this Contract. Engineer shall be fully responsible for his/her/its delays or for failures to use his/her/its reasonable efforts in accordance with the terms of this Contract and the Engineer's standard of performance as defined herein. Where damage is caused to County due to Engineer's negligent failure to perform County may accordingly withhold, to the extent of such damage, Engineer's payments hereunder without waiver of any of County's additional legal rights or remedies.

B. Force Majeure. Neither County nor Engineer shall be deemed in violation of this Contract if prevented from performing any of their obligations hereunder by reasons for which they are not responsible or circumstances beyond their control. However, notice of such impediment or delay in performance must be timely given, and all reasonable efforts undertaken to mitigate its effects.

C. Enforcement and Venue. This Contract shall be enforceable in San Marcos, Hays County, Texas, and if legal action is necessary by either party with respect to the enforcement of any or all of the terms or conditions herein, exclusive venue for same shall lie in Hays County, Texas. This Contract shall be governed by and construed in accordance with the laws and court decisions of the State of Texas excluding, however, its choice of law rules.

D. Standard of Performance. The standard of care for all professional engineering, consulting and related services performed or furnished by Engineer and its employees under this Contract will be the care and skill ordinarily used by members of Engineer's profession practicing

under the same or similar circumstances at the same time and in the same locality.

E. Opinion of Probable Cost. Any opinions of probable Project cost or probable construction cost provided by Engineer are made on the basis of information available to Engineer and on the basis of Engineer's experience and qualifications and represents its judgment as an experienced and qualified professional engineer. However, since Engineer has no control over the cost of labor, materials, equipment or services furnished by others, or over the contractor(s') methods of determining prices, or over competitive bidding or market conditions, Engineer does not guarantee that proposals, bids or actual Project or construction cost will not vary from opinions of probable cost Engineer prepares.

F. Opinions and Determinations. Where the terms of this Contract provide for action to be based upon opinion, judgment, approval, review, or determination of either party hereto, such terms are not intended to be and shall never be construed as permitting such opinion, judgment, approval, review, or determination to be arbitrary, capricious, or unreasonable.

G. Reports of Accidents. Within 24 hours after Engineer becomes aware of the occurrence of any accident or other event which results in, or might result in, injury to the person or property of any third person (other than an employee of the Engineer), whether or not it results from or involves any action or failure to act by the Engineer or any employee or agent of the Engineer and which arises in any manner from the performance of this Contract, the Engineer shall send a written report of such accident or other event to the County, setting forth a full and concise statement of the facts pertaining thereto. The Engineer shall also immediately send the County a copy of any summons, subpoena, notice, or other documents served upon the Engineer, its agents, employees, or representatives, or received by it or them, in connection with any matter before any court arising in any manner from the Engineer's performance of work under this Contract.

H. Gender, Number and Headings. Words of any gender used in this Contract shall be held and construed to include any other gender, and words in the singular number shall be held to include the plural, unless the context otherwise requires. The headings and section numbers are for convenience only and shall not be considered in interpreting or construing this Contract.

I. Construction. Each party hereto acknowledges that it and its counsel have reviewed this Contract and that the normal rules of construction are not applicable and there will be no presumption that any ambiguities will be resolved against the drafting party in the interpretation of this Contract.

J. Independent Contractor Relationship. Both parties hereto, in the performance of this Contract, shall act in an individual capacity and not as agents, employees, partners, joint ventures or associates of one another. The employees or agents of one party shall not be deemed or construed to be the employees or agents of the other party for any purposes whatsoever.

K. No Waiver of Immunities. Nothing in this Contract shall be deemed to waive, modify or amend any legal defense available at law or in equity to County, its past or present officers, employees, or agents or employees, nor to create any legal rights or claim on behalf of

any third party. County does not waive, modify, or alter to any extent whatsoever the availability of the defense of governmental immunity under the laws of the State of Texas and of the United States.

L. Texas Public Information Act. To the extent, if any, that any provision in this Contract is in conflict with Tex. Gov't Code 552.001 et seq., as amended (the "Public Information Act"), the same shall be of no force or effect. Furthermore, it is expressly understood and agreed that County, its officers and employees may request advice, decisions and opinions of the Attorney General of the State of Texas in regard to the application of the Public Information Act to any items or data furnished to County as to whether or not the same are available to the public. It is further understood that County's officers and employees shall have the right to rely on the advice, decisions and opinions of the Attorney General, and that County, its officers and employees shall have no liability or obligation to any party hereto for the disclosure to the public, or to any person or persons, of any items or data furnished to County by a party hereto, in reliance of any advice, decision or opinion of the Attorney General of the State of Texas.

M. Governing Terms and Conditions. If there is an irreconcilable conflict between the terms and conditions set forth in this Contract or any Contract Amendment and the terms and conditions set forth in any Exhibit, Appendix, Work Authorization or Supplemental Work Authorization to this Contract, the terms and conditions set forth in this Contract or any Contract Amendment shall control over the terms and conditions set forth in any Exhibit, Appendix, Work Authorization or Supplemental Work Authorization to this Contract.

N. Meaning of Day. For purposes of this Contract, all references to a "day" or "days" shall mean a calendar day or calendar days.

O. Appropriation of Funds by County. County believes it has sufficient funds currently available and authorized for expenditure to finance the costs of this Contract. Engineer understands and agrees that County's payment of amounts under this Contract is contingent on the County receiving appropriations or other expenditure authority sufficient to allow the County, in the exercise of reasonable administrative discretion, to continue to make payments under this Contract. It is further understood and agreed by Engineer that County shall have the right to terminate this Contract at the end of any County fiscal year if the governing body of County does not appropriate sufficient funds as determined by County's budget for the fiscal year in question. County may effect such termination by giving written notice of termination to Engineer.

ARTICLE 33
DISPUTE RESOLUTION

Except as otherwise specifically set forth herein, County and Engineer shall work together in good faith to resolve any controversy, dispute or claim between them which arises out of or relates to this Contract, whether stated in tort, contract, statute, claim for benefits, bad faith, professional liability or otherwise ("Claim"). If the parties are unable to resolve the Claim within thirty (30) days following the date in which one party sent written notice of the Claim to the other party, and if a party wishes to pursue the Claim, such Claim shall be addressed through non-binding mediation. A single mediator engaged in the practice of law, who is knowledgeable about subject matter of this Contract, shall be selected by agreement of the parties and serve as the mediator.

Any mediation under this Contract shall be conducted in Hays County, Texas. The mediator's fees shall be borne equally between the parties. Such non-binding mediation is a condition precedent to seeking redress in a court of competent jurisdiction, but this provision shall not preclude either party from filing a lawsuit in a court of competent jurisdiction prior to completing a mediation if necessary to preserve the statute of limitations, in which case such lawsuit shall be stayed pending completion of the mediation process contemplated herein. This provision shall survive the termination of the Contract.

ARTICLE 34
EQUAL OPPORTUNITY IN EMPLOYMENT

During the performance of this Contract and to the extent the Project is a federally funded project, Engineer, for itself, its assignees and successors in interest agrees as follows:

A. Compliance with Regulations. The Engineer shall comply with the Regulations relative to nondiscrimination in Federally-assisted programs of the Department of Transportation (hereinafter, "DOT") Title 49, Code of Federal Regulations, Part 21, as they may be amended from time to time, (hereinafter referred to as the Regulations), which are herein incorporated by reference and made a part of this Contract.

B. Nondiscrimination. The Engineer, with regard to the work performed by it during the Contract, shall not discriminate on the grounds of race, color, or national origin in the selection and retention of subcontractors/subconsultants, including procurements of materials and leases of equipment. The Engineer shall not participate either directly or indirectly in the discrimination prohibited by section 21.5 of the Regulations, including employment practices when the contract covers a program set forth in Appendix B of the Regulations.

C. Solicitations for Subcontracts, Including Procurements of Materials and Equipment. In all solicitations either by competitive bidding or negotiation made by the Engineer for work to be performed under a subcontract, including procurements of materials or leases of equipment, each potential subcontractor/subconsultant or supplier shall be notified by the Engineer of the Engineer's obligations under this Contract and the Regulations relative to nondiscrimination on the grounds of race, color, or national origin.

D. Information and Reports. The Engineer shall provide all information and reports required by the Regulations or directives issued pursuant thereto, and shall permit access to its books, records, accounts, other sources of information, and its facilities as may be determined by the County (referred to in this Article as the "Recipient") or the Texas Department of Transportation to be pertinent to ascertain compliance with such Regulations, orders and instructions. Where any information required of a contractor is in the exclusive possession of another who fails or refuses to furnish this information the Engineer shall so certify to the Recipient, or the Texas Department of Transportation as appropriate, and shall set forth what efforts it has made to obtain the information.

E. Sanctions for Noncompliance. In the event of the Engineer's noncompliance with the nondiscrimination provisions of this contract, the Recipient shall impose such contract

sanctions as it or the Texas Department of Transportation may determine to be appropriate, including, but not limited to:

1. withholding of payments to the Engineer under the contract until the Engineer complies, and/or;
2. cancellation, termination or suspension of the Contract, in whole or in part.

F. Incorporation of Provisions. The Engineer shall include the provisions of Subsections (A) through (F) above in every subcontract, including procurements of materials and leases of equipment, unless exempt by the Regulations, or directives issued pursuant thereto. The Engineer shall take such action with respect to any subcontract or procurement as the Recipient or the Texas Department of Transportation may direct as a means of enforcing such provisions including sanctions for non-compliance: Provided, however, that, in the event a contractor becomes involved in, or is threatened with, litigation with a subcontractor/subconsultant or supplier as a result of such direction, the Engineer may request the Recipient to enter into such litigation to protect the interests of the Recipient, and, in addition, the Engineer may request the United States to enter into such litigation to protect the interests of the United States.

SIGNATORY WARRANTY

The undersigned signatory for Engineer hereby represents and warrants that the signatory is an officer of the organization for which he/she has executed this Contract and that he/she has full and complete authority to enter into this Contract on behalf of the firm. The above-stated representations and warranties are made for the purpose of inducing County to enter into this Contract.

IN WITNESS WHEREOF, County has caused this Contract to be signed in its name by its duly authorized County Judge, as has Engineer, signing by and through its duly authorized representative(s), thereby binding the parties hereto, their successors, assigns and representatives for the faithful and full performance of the terms and provisions hereof, to be effective as of the date of the last party's execution below. NO OFFICIAL, EMPLOYEE, AGENT, OR REPRESENTATIVE OF THE COUNTY HAS ANY AUTHORITY, EITHER EXPRESS OR IMPLIED, TO AMEND, TERMINATE OR MODIFY THIS CONTRACT, EXCEPT PURSUANT TO SUCH EXPRESS AUTHORITY AS MAY BE GRANTED BY THE HAYS COUNTY COMMISSIONERS COURT.

COUNTY

HAYS COUNTY, TEXAS

By: _____
Ruben Becerra, County Judge

Date: _____ ____, 20_____

07/15/2020

ENGINEER

Cobb, Fendley & Associates, Inc.

By _____

Printed Name: _Sandra G. Khoury, P.E._____

Title: Vice President_____

Date: July 14 , 2020

LIST OF EXHIBITS ATTACHED

(1) **Exhibit A** Debarment Certification

(2) **Exhibit B** Engineering Services

(3) **Exhibit C** Work Authorization

(4) **Exhibit D** Rate Schedule

(5) **Exhibit E** Certificates of Insurance

EXHIBIT A
DEBARMENT CERTIFICATION

STATE OF TEXAS §
§
COUNTY OF HAYS §

I, the undersigned, being duly sworn or under penalty of perjury under the laws of the United States and the State of Texas, certifies that Engineer and its principals:

(a) Are not presently debarred, suspended, proposed for debarment, declared ineligible or voluntarily excluded from covered transactions by any federal department or agency:

(b) Have not within a three-year period preceding this proposal been convicted of or had a civil judgment rendered against them for commission of fraud or a criminal offense in connection with obtaining, attempting to obtain, or performing a public* transaction or contract under a public transaction; violation of federal or state antitrust statutes or commission of embezzlement, theft, forgery, bribery, falsification or destruction of records, making false statements, or receiving stolen property;

(c) Are not presently indicted for or otherwise criminally or civilly charged by a governmental entity* with commission of any of the offenses enumerated in paragraph (1)(b) of this certification;

(d) Have not within a three-year period preceding this application/proposal had one or more public transactions* terminated for cause or default; and

(e) Have not been disciplined or issued a formal reprimand by any State agency for professional accreditation within the past three years.

Cobb, Fendley & Associates, Inc.
Name of Firm

Sandra G Khoury
Signature of Certifying Official

Sandra G. Khoury, P.E.
Printed Name of Certifying Official

Vice President
Title of Certifying Official

July 10, 2020
Date

(2) Where the PROVIDER is unable to certify to any of the statements in this certification, such PROVIDER shall attach an explanation to this certification.

* federal, state, or local

SUBSCRIBED and sworn to before me the undersigned authority by Sandra G. Khoury PE the 10th of July, on behalf of said firm.

Megan Lesher

Notary Public in and for the
State of Texas

MEGAN LESHER
Notary Public, State of Texas
Comm. Expires 10-16-2023
Notary ID 130405364

My commission expires: 10/16/2023

EXHIBIT B

ENGINEERING SERVICES

Services to be provided by the Engineer: UTILITY COORDINATION FOR RM 967

The Engineer may perform the following including but not limited to the tasks below, as described in detail in each Work Authorization:

- PROJECT MANAGEMENT AND COORDINATION
- UTILITY PLANNING & RESEARCH
- SUBSURFACE UTILITY ENGINEERING (SUE)
- FIELD SURVEYING
- UTILITY ADJUSTMENT COORDINATION
- UTILITY ENGINEERING & DESIGN
- UTILITY CONSTRUCTION MANAGEMENT AND VERIFICATION

EXHIBIT C

WORK AUTHORIZATION

(To Be Completed and Executed After Contract Execution)

WORK AUTHORIZATION NO. _____
PROJECT: _____

This Work Authorization is made pursuant to the terms and conditions of the Hays County Contract for Engineering Services, being dated _____ ____, 20____ and entered into by and between Hays County, Texas, a political subdivision of the State of Texas, (the "County") and _____ (the "Engineer").

Part1. The Engineer will provide the following Engineering Services set forth in Attachment "B" of this Work Authorization.

Part 2. The maximum amount payable for services under this Work Authorization without modification is _____.

Part 3. Payment to the Engineer for the services established under this Work Authorization shall be made in accordance with the Contract.

Part 4. This Work Authorization shall become effective on the date of final acceptance and full execution of the parties hereto and shall terminate on _____ ____, 20_____. The Engineering Services set forth in Attachment "B" of this Work Authorization shall be fully completed on or before said date unless extended by a Supplemental Work Authorization.

Part 5. This Work Authorization does not waive the parties' responsibilities and obligations provided under the Contract.

Part 6. County believes it has sufficient funds currently available and authorized for expenditure to finance the costs of this Work Authorization. Engineer understands and agrees that County's payment of amounts under this Work Authorization is contingent on the County receiving appropriations or other expenditure authority sufficient to allow the County, in the exercise of reasonable administrative discretion, to continue to make payments under this Contract. It is further understood and agreed by Engineer that County shall have the right to terminate this Contract at the end of any County fiscal year if the governing body of County does not appropriate sufficient funds as determined by County's budget for the fiscal year in question. County may effect such termination by giving written notice of termination to Engineer.

Part 7. This Work Authorization is hereby accepted and acknowledged below.

EXECUTED this ____ day of _____, 20___.

ENGINEER:	COUNTY:
[Insert Company Name HERE]	Hays County, Texas
By:_____	By:_____
Signature	Signature
_____	_____
Printed Name	Printed Name
_____	_____
Title	Title

LIST OF ATTACHMENTS

Attachment A - Services to be Provided by County

Attachment B - Services to be Provided by Engineer

Attachment C - Work Schedule

Attachment D - Fee Schedule

EXHIBIT D

Fee/Rate Schedule

FEE SCHEDULE SHALL BE INSERTED AT THE TIME OF AGREEMENT/CONTRACT EXECUTION

EXHIBIT E

CERTIFICATES OF INSURANCE

ATTACHED BEHIND THIS PAGE

Client#: 153896 COBBFEND

ACORD™ CERTIFICATE OF LIABILITY INSURANCE

DATE (MM/DD/YYYY) 7/13/2020

THIS CERTIFICATE IS ISSUED AS A MATTER OF INFORMATION ONLY AND CONFERS NO RIGHTS UPON THE CERTIFICATE HOLDER. THIS CERTIFICATE DOES NOT AFFIRMATIVELY OR NEGATIVELY AMEND, EXTEND OR ALTER THE COVERAGE AFFORDED BY THE POLICIES BELOW. THIS CERTIFICATE OF INSURANCE DOES NOT CONSTITUTE A CONTRACT BETWEEN THE ISSUING INSURER(S), AUTHORIZED REPRESENTATIVE OR PRODUCER, AND THE CERTIFICATE HOLDER.

IMPORTANT: If the certificate holder is an ADDITIONAL INSURED, the policy(ies) must have ADDITIONAL INSURED provisions or be endorsed. If SUBROGATION IS WAIVED, subject to the terms and conditions of the policy, certain policies may require an endorsement. A statement on this certificate does not confer any rights to the certificate holder in lieu of such endorsement(s).

PRODUCER
USI Southwest
9811 Katy Freeway, Suite 500
Houston, TX 77024
713 490-4600

CONTACT NAME: Shelly Brandman/Michelle Weweh
PHONE (A/C, No, Ext): 713 490-4600 FAX (A/C, No):
E-MAIL ADDRESS: shelly.brandman@usi.com

INSURER(S) AFFORDING COVERAGE	NAIC #
INSURER A : Valley Forge Insurance Company	20508
INSURER B : Travelers Property Cas. Co. of America	25674
INSURER C : Berkley Insurance Company	32603
INSURER D :	
INSURER E :	
INSURER F :	

INSURED
Cobb, Fendley & Associates, Inc.
13430 Northwest Frwy, Suite 1100
Houston, TX 77040

COVERAGES CERTIFICATE NUMBER: REVISION NUMBER:

THIS IS TO CERTIFY THAT THE POLICIES OF INSURANCE LISTED BELOW HAVE BEEN ISSUED TO THE INSURED NAMED ABOVE FOR THE POLICY PERIOD INDICATED. NOTWITHSTANDING ANY REQUIREMENT, TERM OR CONDITION OF ANY CONTRACT OR OTHER DOCUMENT WITH RESPECT TO WHICH THIS CERTIFICATE MAY BE ISSUED OR MAY PERTAIN, THE INSURANCE AFFORDED BY THE POLICIES DESCRIBED HEREIN IS SUBJECT TO ALL THE TERMS, EXCLUSIONS AND CONDITIONS OF SUCH POLICIES. LIMITS SHOWN MAY HAVE BEEN REDUCED BY PAID CLAIMS.

INSR LTR	TYPE OF INSURANCE	ADDL INSR	SUBR WVD	POLICY NUMBER	POLICY EFF (MM/DD/YYYY)	POLICY EXP (MM/DD/YYYY)	LIMITS	
A	X COMMERCIAL GENERAL LIABILITY			6072140890	07/10/2020	07/10/2021	EACH OCCURRENCE	$1,000,000
	CLAIMS-MADE X OCCUR						DAMAGE TO RENTED PREMISES (Ea occurrence)	$150,000
							MED EXP (Any one person)	$15,000
							PERSONAL & ADV INJURY	$1,000,000
	GEN'L AGGREGATE LIMIT APPLIES PER:						GENERAL AGGREGATE	$2,000,000
	POLICY X PRO-JECT LOC						PRODUCTS - COMP/OP AGG	$2,000,000
	OTHER:							$
A	AUTOMOBILE LIABILITY			6072140873	07/10/2020	07/10/2021	COMBINED SINGLE LIMIT (Ea accident)	$1,000,000
	X ANY AUTO						BODILY INJURY (Per person)	$
	OWNED AUTOS ONLY / SCHEDULED AUTOS						BODILY INJURY (Per accident)	$
	X HIRED AUTOS ONLY / X NON-OWNED AUTOS ONLY						PROPERTY DAMAGE (Per accident)	$
								$
B	X UMBRELLA LIAB X OCCUR			ZUP21P28800	07/10/2020	07/10/2021	EACH OCCURRENCE	$12,000,000
	EXCESS LIAB CLAIMS-MADE						AGGREGATE	$12,000,000
	DED X RETENTION $10,000							$
A	WORKERS COMPENSATION AND EMPLOYERS' LIABILITY Y / N			6072140842	07/10/2020	07/10/2021	X PER STATUTE / OTH-ER	
	ANY PROPRIETOR/PARTNER/EXECUTIVE OFFICER/MEMBER EXCLUDED? N (Mandatory in NH) If yes, describe under DESCRIPTION OF OPERATIONS below	N / A					E.L. EACH ACCIDENT	$1,000,000
							E.L. DISEASE - EA EMPLOYEE	$1,000,000
							E.L. DISEASE - POLICY LIMIT	$1,000,000
C	Professional Liability			AEC903777005	07/10/2020	07/10/2021	$5,000,000 Per Claim $5,000,000 Annl Aggr.	

DESCRIPTION OF OPERATIONS / LOCATIONS / VEHICLES (ACORD 101, Additional Remarks Schedule, may be attached if more space is required)

The General Liability and Automobile Liability policies includes an automatic Additional Insured endorsement that provides Additional Insured status to the Certificate Holder only when there is a written contract that requires such status, and only with regard to work performed on behalf of the named insured.

The General Liability and Automobile Liability policies contain a special endorsement with "Primary and
(See Attached Descriptions)

CERTIFICATE HOLDER

Hays County Auditor
Attn: Vickie G. Dorsett
712 South Stagecoach Trail, Suite 1071
San Marcos, TX 78666

CANCELLATION

SHOULD ANY OF THE ABOVE DESCRIBED POLICIES BE CANCELLED BEFORE THE EXPIRATION DATE THEREOF, NOTICE WILL BE DELIVERED IN ACCORDANCE WITH THE POLICY PROVISIONS.

AUTHORIZED REPRESENTATIVE

© 1988-2015 ACORD CORPORATION. All rights reserved.

DESCRIPTIONS (Continued from Page 1)

Noncontributory" wording.

The General Liability, Automobile, Workers Compensation, and Professional Liability policies provide a Blanket Waiver of Subrogation when required by written contract.

The General Liability, Automobile, Workers Compensation, Umbrella Liability, and Professional Liability policies include an endorsement providing that 30 days notice of cancellation for reasons other than non-payment of premium and 10 days notice of cancellation for nonpayment of premium will be given to the Certificate Holder by the Insurance Carrier.

The Umbrella Liability policy follows form.

RE: Utility Coordination Services for RM 967.
Additional Insured Includes: Hays County and its directors, officers and employees.

CODE OF ETHICS FOR HAYS COUNTY

Public employment is a public trust. It is the policy of Hays County to promote and balance the objective of protecting government integrity and the objective of facilitating the recruitment and retention of personnel needed by Hays County. Such a policy implemented by prescribing essential standards of ethical conduct without creating unnecessary obstacles to entering public services.

Public servants must discharge their duties impartially so as to assure fair competitive access to governmental procurement by responsible contractors. Moreover, they should conduct themselves in such a manner as to foster public confidence in the integrity of the Hays County procurement organization.

To achieve the purpose of this article, it is essential that those doing business with Hays County also observe the ethical standards prescribed here.

1. It shall be a breach of ethics to attempt to influence any public employee, elected official or department head to breach the standards of ethical conduct set forth in this code.

2. It shall be a breach of ethics for any employee of Hays County or a vendor doing business with the county to participate directly or indirectly in a procurement when the employee or vendor knows that:

   A. The employee or any member of the employee's immediate family, or household has a substantial financial interest pertaining to the procurement. This means ownership of 10% or more of the company involved and/or ownership of stock or other interest or such valued at $2500.00 or more.

   B. A business or organization in which the employee, or any member of the employee's immediate family, has a financial interest pertaining to the procurement.

   C. Gratuities: It shall be a breach of ethics to offer, give or agree to give any employee of Hays County or for any employee to solicit, demand, accept or agree to accept from a vendor, a gratuity of consequence or any offer of employment in connection with any decision approval, disapproval, recommendation, preparation or any part of a program requirement or purchase request influencing the content of any specification or procurement standard, rendering of advice, investigation, auditing, or in any other advisory capacity in any proceeding or controversy, any particular matter pertaining to any program requirement or a contract or subcontract, or to any solicitation or proposal therefore pending before this government.

D. Kickbacks: It shall be a breach of ethics for any payment, gratuity or offer of employment to be made by or on behalf of a subcontractor under a contract to the prime contractor or higher tier subcontractor for any contract for Hays County as an inducement for the award of a contract or order.

E. Contract Clause: The prohibition against gratuities and kickbacks prescribed above shall be conspicuously set forth in every contract and solicitation therefore.

F. Any effort to influence any employee, elected official, or department head to violate the standards of the code is grounds to void the contract. Please certify, by your signature below, that you understand the ethics policy of Hays County and in no way will attempt to violate the code.

SIGNATURE: Sandra G Khoury

PRINT NAME & TITLE: Sandra G. Khoury, P.E.

COMPANY NAME: Cobb, Fendley & Associates, Inc.

EXHIBIT A
DEBARMENT CERTIFICATION

STATE OF TEXAS §
§
COUNTY OF HAYS §

I, the undersigned, being duly sworn or under penalty of perjury under the laws of the United States and the State of Texas, certifies that Engineer and its principals:

(a) Are not presently debarred, suspended, proposed for debarment, declared ineligible or voluntarily excluded from covered transactions by any federal department or agency:

(b) Have not within a three-year period preceding this proposal been convicted of or had a civil judgment rendered against them for commission of fraud or a criminal offense in connection with obtaining, attempting to obtain, or performing a public* transaction or contract under a public transaction; violation of federal or state antitrust statutes or commission of embezzlement, theft, forgery, bribery, falsification or destruction of records, making false statements, or receiving stolen property;

(c) Are not presently indicted for or otherwise criminally or civilly charged by a governmental entity* with commission of any of the offenses enumerated in paragraph (1)(b) of this certification;

(d) Have not within a three-year period preceding this application/proposal had one or more public transactions* terminated for cause or default; and

(e) Have not been disciplined or issued a formal reprimand by any State agency for professional accreditation within the past three years.

Cobb, Fendley & Associates, Inc.
Name of Firm

Sandra G Khoury
Signature of Certifying Official

Sandra G. Khoury, P.E.
Printed Name of Certifying Official

Vice President
Title of Certifying Official

July 10, 2020
Date

(2) Where the PROVIDER is unable to certify to any of the statements in this certification, such PROVIDER shall attach an explanation to this certification.

* federal, state, or local

SUBSCRIBED and sworn to before me the undersigned authority by Sandra G. Khoury PE the 10th of July, on behalf of said firm.

Megan Lesher

Notary Public in and for the
State of Texas

MEGAN LESHER
Notary Public, State of Texas
Comm. Expires 10-16-2023
Notary ID 130405364

My commission expires: 10/16/2023

Hays County
House Bill 89 Verification

I, Sandra G. Khoury, P.E. (Person name), the undersigned representative of (Company or Business name) Cobb, Fendley & Associates, Inc. (hereafter referred to as company) being an adult over the age of eighteen (18) years of age, after being duly sworn by the undersigned notary, do hereby depose and verify under oath that the company named-above, under the provisions of Subtitle F, Title 10, Government Code Chapter 2270:

1. Does not boycott Israel currently; and
2. Will not boycott Israel during the term of the contract.

Pursuant to Section 2270.001, Texas Government Code:

1. *"Boycott Israel" means refusing to deal with, terminating business activities with, or otherwise taking any action that is intended to penalize, inflict economic harm on, or limit commercial relations specifically with Israel, or with a person or entity doing business in Israel or in an Israeli-controlled territory, but does not include an action made for ordinary business purposes; and*
2. *"Company" means a for-profit sole proprietorship, organization, association, corporation, partnership, joint venture, limited partnership, limited liability partnership, or any limited liability company, including a wholly owned subsidiary, majority-owned subsidiary, parent company or affiliate of those entities or business associations that exist to make a profit.*

7/9/2020 — Sandra G Khoury

DATE — SIGNATURE OF COMPANY REPRESENTATIVE

On this the 9th day of July, 2020, personally appeared Sandra G. Khoury, P.E., the above-named person, who after by me being duly sworn, did swear and confirm that the above is true and correct.

NOTARY SEAL

Megan Lesher

NOTARY SIGNATURE

MEGAN LESHER
Notary Public, State of Texas
Comm. Expires 10-16-2023
Notary ID 130405364

7/9/2020

Date

Related Party Disclosure Form

Hays County strives to provide financial transparency to its taxpayers. Completion of this form will allow for added transparency into the procurement process by disclosing Vendor relationships with current or former Hays County employees. The existence of a relationship may not present a legal or ethical conflict for a Vendor. However, disclosure will allow for consideration of potential conflicts and/or ways to eliminate conflicts.

A Vendor who Employs any of the following is required to disclose the relationship on this form:

- Current Hays County employee (including elected or appointed official)(Complete Section A)
- Former Hays County employee who has been separated from Hays County for no less than four (4) years (including elected or appointed official) (Complete Section B)
- Person related within the 2nd degree of consanguinity or affinity to either of the above[1] (Complete Section C)

If no known relationships exist, complete Section D.

This form is required to be completed in full and submitted with the proposal package. A submitted proposal package that does not include this completed form will be considered non-responsive and will not be eligible for an award.

Section A: Current Hays County Employee

_____

Employee Name Title

Section B: Former Hays County Employee

_____

Employee Name Title Date of Separation from County

Section C: Person Related to Current or Former Hays County Employee

_____

Employee or Former Employee Name Title

_____

Name of Related Person Title Relationship

Section D: No Known Relationships

If no relationships in accordance with the above exist or are known to exist, provide a written explanation below:

No relationships exist or are known to exist between Cobb, Fendley & Associates, Inc. and any Hays County employees.

_____

_____

Attach additional pages if necessary.

I, the undersigned, hereby certify that the information provided is true and complete to the best of my knowledge.

Cobb, Fendley & Associates, Inc.

Name of Vendor

Sandra Khoury

Signature of Certifying Official

Vice President

Title of Certifying Official

Sandra G. Khoury, PE

Printed Name of Certifying Official

07/09/2020

Date

(1)A degree of relationship is determined under Texas Government Code Chapter 573. (as outlined below)

Relationship of Consanguinity				
	1st Degree	**2nd Degree**	**3rd Degree***	**4th Degree***
Person	child or parent	grandchild, sister, brother or grand-parent	great-grandchild, niece, nephew, aunt,* uncle* or great-grandparent	great-great-grandchild, grandniece, grandnephew, first cousin, great aunt,* great uncle* or great-great-grandparent
* An aunt, uncle, great aunt or great uncle is related to a person by consanguinity only if he or she is the sibling of the person's parent or grandparent.				

Relationship of Affinity		
	1st Degree	**2nd Degree**
Person	spouse, mother-in-law, father-in-law, son-in-law, daughter-in-law, stepson, stepdaughter, stepmother or stepfather	brother-in-law, sister-in-law, spouse's grandparent, spouse's grandchild, grandchild's spouse or spouse of grandparent

“Vendor” shall mean any individuals or entity that seeks to enter into a contract with Hays County.

“Employs” shall mean any relationship wherein Vendor has made arrangements to compensate an individual, directly or by way of a business organization in which the individual has a sharehold or ownership interest, even if that arrangement is contractual and/or on an hourly-charge basis.

AGENDA ITEM REQUEST FORM

Hays County Commissioners Court

Tuesdays at 9:00 AM

Request forms are due in Microsoft Word Format via email by 2:00 p.m. on Wednesday.

AGENDA ITEM

Discussion and possible action to approve the selection of Binkley & Barfield, Inc. to provide utility coordination services for RM 12 at RM 3237 intersection project in Precinct 3; and to authorize staff and counsel to negotiate a contract.

ITEM TYPE	MEETING DATE	AMOUNT REQUIRED
ACTION-ROADS	July 21, 2020	$0.00

LINE ITEM NUMBER

AUDITOR USE ONLY

AUDITOR COMMENTS:

PURCHASING GUIDELINES FOLLOWED: N/A **AUDITOR REVIEW:** N/A

REQUESTED BY	SPONSOR	CO-SPONSOR
Jerry Borcherding, P.E., Transportation Director	SHELL	N/A

SUMMARY

The RM 12 at RM 3237 intersection improvement Safety & Mobility [26-768-034] project is included in the 2016 Road Bond Program and is one of the highest priorities in Precinct 3 and in the County. Binkley & Barfield, Inc. Inc. has been pre-qualified by Hays County for the requested services. The process to initially select an engineering consultant to negotiate a scope of work and fee proposal, with subsequent action by the Hays County Commissioners Court to approve the contract integrating the negotiated scope of work and fee proposal, follows the process set forth in the Hays County Purchasing Policy and Procedures Manual, revised May 30, 2017.

AGENDA ITEM REQUEST FORM

Hays County Commissioners Court
Tuesdays at 9:00 AM

Request forms are due in Microsoft Word Format via email by 2:00 p.m. on Wednesday.

AGENDA ITEM

PLN-1475-NP; Discussion and possible action to approve the final plat for O'Neil Ranch, Tract 7 Subdivision.

ITEM TYPE	MEETING DATE	AMOUNT REQUIRED
ACTION-SUBDIVISIONS	July 21, 2020	

LINE ITEM NUMBER

AUDITOR USE ONLY

AUDITOR COMMENTS:

PURCHASING GUIDELINES FOLLOWED: N/A **AUDITOR REVIEW:** N/A

REQUESTED BY	SPONSOR	CO-SPONSOR
PACHECO	SMITH	N/A

SUMMARY

O'Neil Ranch, Tract 7 is a proposed 2 lot subdivision located off of O'Neil Ranch Road in Precinct 4. Water service will be provided by Individual Private Well. Wastewater treatment will be accomplished by Individual On-Site Sewage Facilities.

Hays County Commissioners Court Agenda Request

Meeting Date: July 21st, 2020
Requested By: Marcus Pacheco, County Planner
Prepared By: Marcus Pacheco, County Planner
Department Director: Caitlyn Strickland, Development Services Director
Sponsoring Court Member: Commissioner Walt Smith, Precinct Four

AGENDA ITEM LANGUAGE:

O'Neil Ranch, Tract 7, Final Plat (2 Lots). Discussion and possible action to approve final plat.

BACKGROUND/SUMMARY OF REQUEST:

A) O'Neil Ranch, Tract 7 is a proposed 2 lot subdivision located off of O'Neil Ranch Road, a county maintained public roadway. Water service will be provided by Individual Private Well. Wastewater treatment will be accomplished by Individual On-Site Sewage Facilities. The property is located within Hays County Commissioner Precinct Four boundary.

STAFF COMMENTS:

Staff has administratively approved the subdivision plat for the O'Neil Ranch Tract 7 Subdivision. The application has no variances requested and meets all of the Development Regulations set forth. Staff recommends the approval of the O'Neil Ranch, Tract 7, Final Plat.

ATTACHMENTS/EXHIBITS:

Property Location Map

Subdivision Plat

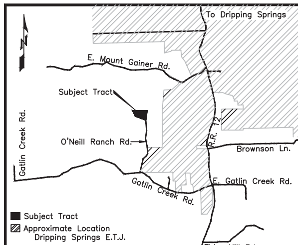

VICINITY MAP
N.T.S.

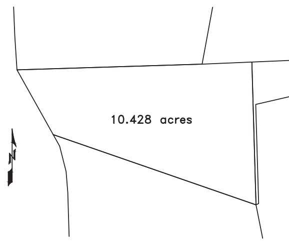

PREVIOUS CONFIGURATION
N.T.S.

E.T.J. NOTE:
No portion of this subdivision lies within the boundaries of any municipalities' corporate city limits or extra territorial jurisdiction.

SCHOOL DISTRICT:
This subdivision lies within the Dripping Springs Independent School District.

GROUNDWATER CONSERVATION DISTRICT:
This subdivision is located in Hays–Trinity Groundwater Conservation District # 4.

EDWARDS AQUIFER NOTE:
This subdivision is located in the Edwards Aquifer Contributing Zone. No portion of this subdivision lies within the Edwards Aquifer Recharge Zone.

FLOOD PLAIN NOTE:
This tract is not within an Identified Special Flood Hazard Area inundated by 100–Year Flood as identified by the Federal Emergency Management Agency, Flood Insurance Rate Map for Hays County, Texas and Incorporated Areas Map Number 48209C0115F, dated September 2, 2005.

DRIVEWAY NOTE:
Driveways shall comply with Chapter 721 of Hays County Development Regulations, and be permitted through the Transportation Department of Hays County under Chapter 751.

CULVERT NOTE:
All culverts, when required, shall comply with the current Hays County standard, per Hays County Development Regulations, Chapter 705, Subchapter 8.03.

EMERGENCY SERVICES DISTRICTS:
This subdivision lies within North Hays County Emergency Services District # 1 and Hays County Emergency Services District # 6.

MAIL BOX NOTE:
Mail boxes placed within the ROW shall be of an approved TxDOT or FHWA design, per Hays County Development Regulations, Chapter 721, Subchapter 2.01.

SHARED ACCESS DRIVEWAY NOTES:
1. All lots served by a Shared Access Driveway are restricted to one single family residence per lot and if any other Development of a Dwelling Unit occurs on any of the Lots obtaining access through the Shared Access Driveway, then such new Dwelling Unit must be constructed on a separately platted lot with direct frontage onto and physical access to a Regulated Roadway prior to construction of the Dwelling Unit. A duplex will not be considered a single family residence for purposes of this subparagraph.
2. The owners of the Single Family Residences obtaining access through the Shared Access Driveway shall be solely responsible for all maintenance of the driveway, including maintaining any drainage structures associated with the driveway. The driveway must be maintained at all times in a condition that will permit unencumbered vehicular access by emergency vehicles.

PLAT NOTES:
1. Under department regulations, this subdivision is exempt from the requirements to demonstrate the availability of water service. Further subdivision is prohibited for the duration of five (5) years following the recording of this plat.
2. Lots are prohibited from further subdivision, until access is improved to county standard.
3. Development on lots larger than five acres is restricted to one Single Family Residence or other development excluded from the term "Regulated Activities" under the Edwards Aquifer Rules of the TCEQ (30 TAC Chapter 213).

ACCESS DRIVEWAY INFORMATION

Total Length: 345.7 ft. (0.06 mi.)
Total Dedicated Length: 0 mi.
No Name is Proposed for Driveway

ROAD INFORMATION

Total Frontage on Private Road:
Lot 7A – 0 ft.
Lot 7B – 29.2 ft.

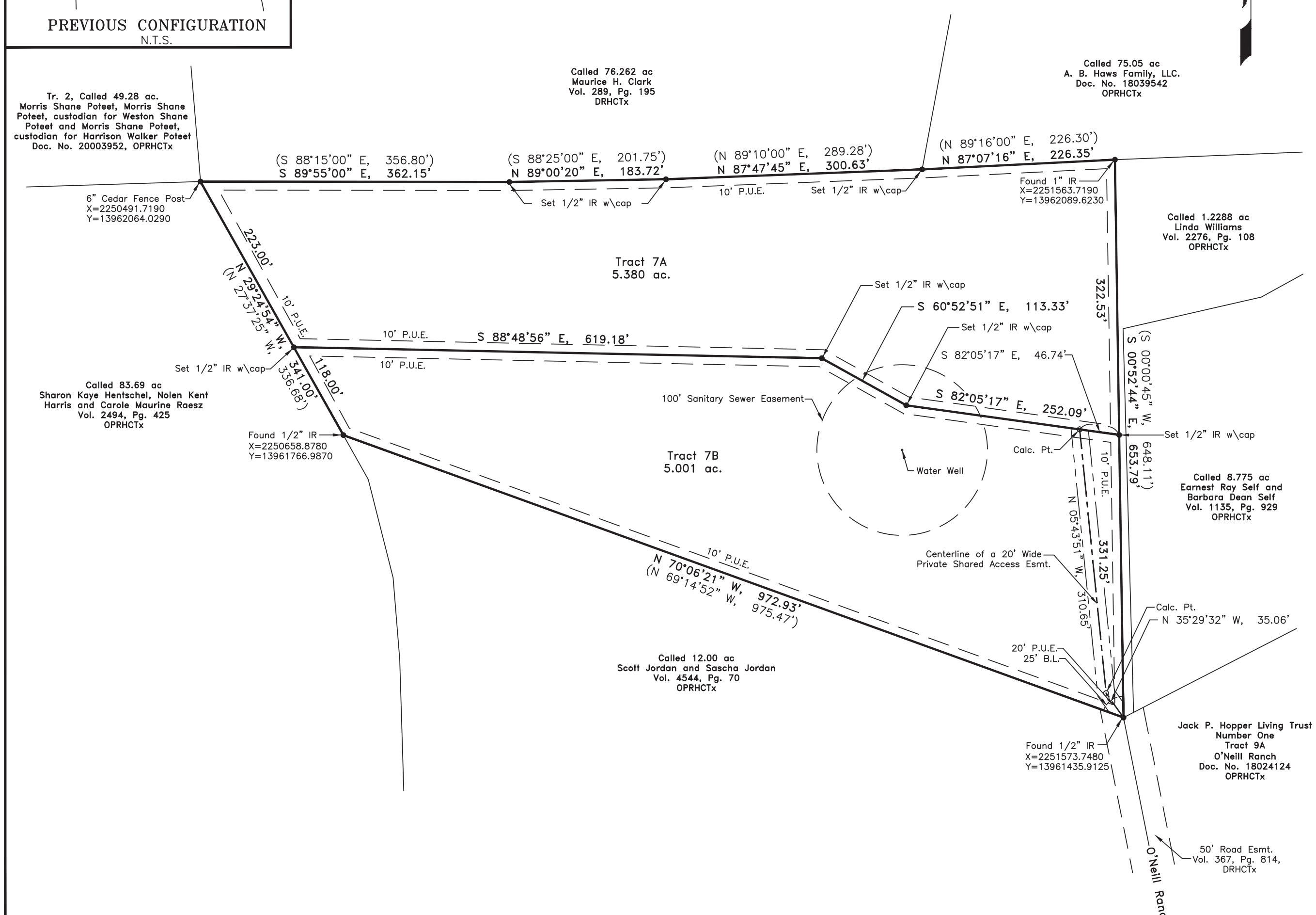

GULF COLORADO and SANTA FE RAILWAY COMPANY SURVEY NO. 1, ABSTRACT 629
HAYS COUNTY, TEXAS

OWNERS' CERTIFICATION:

KNOW ALL MEN BY THESE PRESENTS: That we, Jimmy J. Cross and spouse, Olivia Y. Cross, owners of record of a called 10.428 acre tract of land, found to contain 10.381 acres, as conveyed to us by deed from Ralph Rubino and spouse, Susan M. Rubino, dated March 01, 2006 and recorded in Volume 2875, Page 165, of the Official Public Records of Hays County, Texas, a tract which is located in the G.C. & S.F. Railroad Company Survey Number 1, Abstract 629, in Hays County, Texas, do hereby subdivide said 10.381 acre tract of land establishing Tracts 7A and 7B, of Tract 7, O'Neill Ranch, in accordance with the plat hereon, subject to any and all easements or restrictions heretofore granted, and do hereby dedicate to the public the use of the easements shown hereon.

WITNESS MY HAND, this the _________ day of ___________________, 2020.

_______________________________ Jimmy J. Cross
_______________________________ Olivia Y. Cross

STATE OF TEXAS
COUNTY OF HAYS

BEFORE ME, the undersigned authority, on this day personally appeared Jimmy J. Cross, known to me to be the person whose name is subscribed to the foregoing instrument and acknowledged to me that he executed the same for the purposes and consideration therein stated.

GIVEN UNDER MY HAND AND SEAL OF OFFICE, this the _________ day of ___________________, 2020.

____
NOTARY PUBLIC, State of Texas

STATE OF TEXAS
COUNTY OF HAYS

BEFORE ME, the undersigned authority, on this day personally appeared Olivia Y. Cross, known to me to be the person whose name is subscribed to the foregoing instrument and acknowledged to me that she executed the same for the purposes and consideration therein stated.

GIVEN UNDER MY HAND AND SEAL OF OFFICE, this the _________ day of ___________________, 2020.

____
NOTARY PUBLIC, State of Texas

HAYS COUNTY CERTIFICATION:

STATE OF TEXAS
COUNTY OF HAYS

I, Elaine Hanson Cardenas, County Clerk of Hays County, Texas, do hereby certify that on the ______ day of ___________________, 2020, the Commissioners Court of Hays County, Texas, passed an order authorizing the filing for record of this plat and said order has been duly entered in the minutes of the said court in Document No. _______________________________.

WITNESS MY HAND AND SEAL OF OFFICE, this the _________ day of ___________________, 2020.

____
Ruben Becerra
County Judge
Hays County, Texas

____
Elaine Hanson Cardenas
County Clerk
Hays County, Texas

STATE OF TEXAS
COUNTY OF HAYS

I, Elaine Hanson Cardenas, County Clerk of Hays County, Texas, do hereby certify that the foregoing instrument of writing with its certificate of authentication was filed for record in my office on the ______ day of ___________________, 2020 at ________ o'clock ____m., in the Plat Records of Hays County, Texas, in

Document No. _______________________.

WITNESS MY HAND AND SEAL OF OFFICE, this the _________ day of ___________________, 2020.

____
Elaine Hanson Cardenas
County Clerk
Hays County, Texas

SEWAGE DISPOSAL/INDIVIDUAL WATER SUPPLY CERTIFICATION, TO WIT:

No structure in this subdivision shall be occupied until connected to an individual water supply or a state–approved community water system. Due to declining water supplies' prospective property owners are cautioned by Hays County to question the seller concerning ground water availability. Rain water collection is encouraged and in some areas may offer the best renewable water resource.

No structure in this subdivision shall be occupied until connected to a permitted sewer system or to an on–site wastewater system that has been approved and permitted by Hays County.

No construction or development within the subdivision may begin until all Hays County Development Authorization requirements have been satisfied.

_______________________________ Date
Caitlyn Strickland
Director
Hays County Development Services Department

_______________________________ Date
Tom Pope C.F.M., R.S.
Hays County Floodplain Administrator

STATE OF TEXAS
COUNTY OF HAYS

KNOW ALL BY THESE PRESENTS, that I, C. Michael Weaver, a REGISTERED PROFESSIONAL LAND SURVEYOR in the State of Texas, do hereby certify that this plat complies with the survey requirements of the Hays County Development Regulations and further certify that this plat is prepared from an actual survey of the property made under my supervision on the ground and that the corner monuments were properly placed under my supervision.

WITNESS MY HAND AND SEAL, this the _________ day of ___________________, 2020.

____
C. Michael Weaver
Registered Professional Land Surveyor No. 4427

PLAT INFORMATION

Total Area: 10.381 Acres
Total Number of Lots: 2
Average Lot Size: 5.190 Acres

Number of Lots Over 10 Acres: 0
Number of Lots 5 – 10 Acres: 2
Number of Lots 2 – 5 Acres: 0
Number of Lots 1 –2 Acres: 0
Number of Lots Less than 1 Acre: 0

UTILITY INFORMATION

Water: Individual Water Wells
Sewer: Individual On–Site Sewage Facilities
Electricity: Pedernales Electric Cooperative, Inc.

Preliminary, this document shall not be recorded for any purpose and shall not be used or viewed or relied upon as a final survey document.

ONeill Ranch Cross Master200604.dwg (060420,16:06:46) (1=100)

Weaver Surveying, LLC
P.O. Box 1129
Dripping Springs, Texas 78620
(512) 777–9190
TBPLS Firm # 10194053

0 50 100
SCALE: 1" = 100'

PLAT OF
Tract 7, O'Neill Ranch
HAYS COUNTY, TEXAS

Revision No:	D	Drawing Date:	9/25/2019
Revision Date:	6/04/2020	Drawing No.:	H181003–01A

O'Neil Ranch, Tract 7 Subdivision - Property Location Map

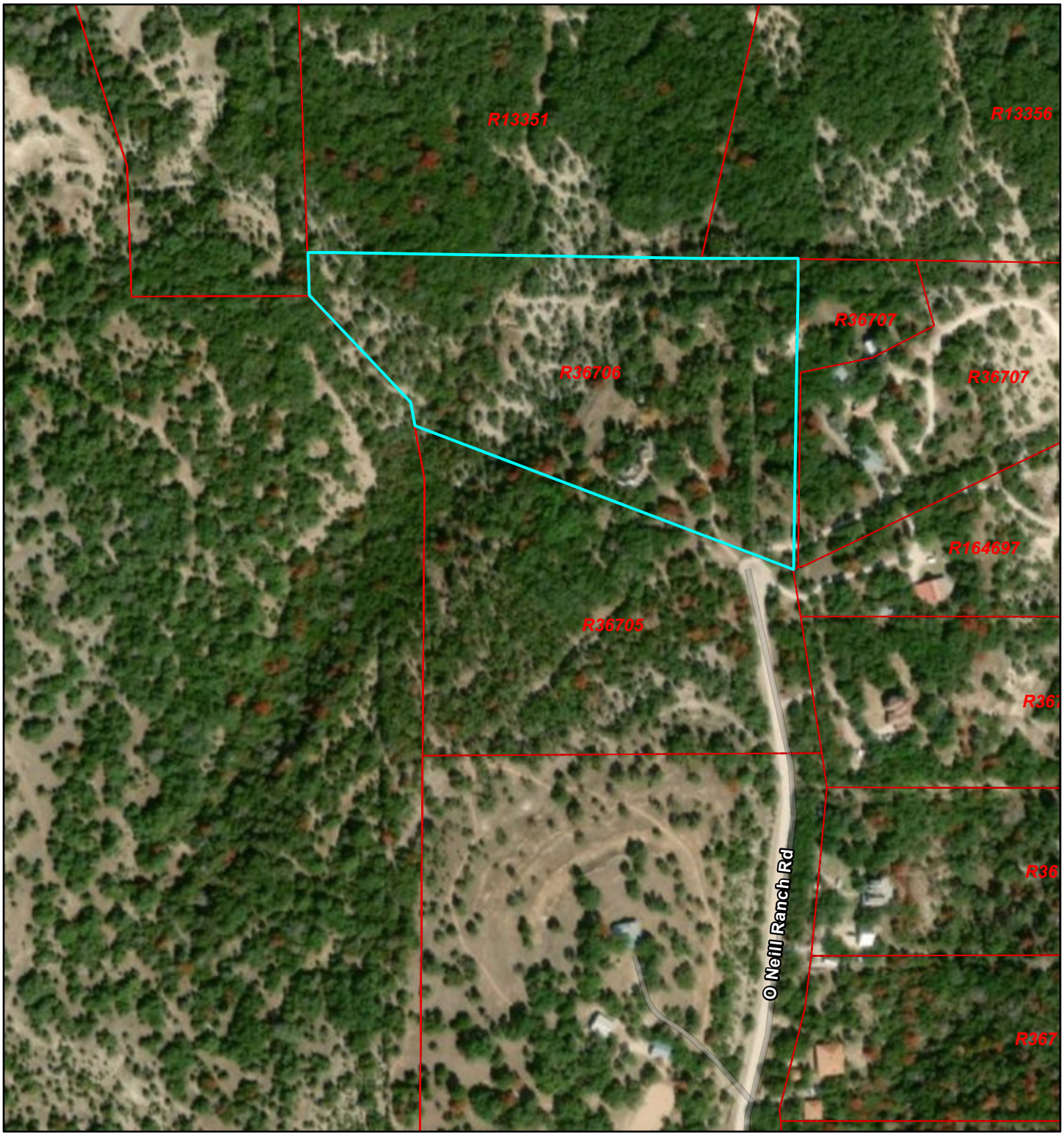

7/15/2020, 12:26:28 PM

1:4,514

0 0.03 0.07 0.13 mi

0 0.05 0.1 0.2 km

Parcels

Lot Lines

Source: Esri, Maxar, GeoEye, Earthstar Geographics, CNES/Airbus DS, USDA, USGS, AeroGRID, IGN, and the GIS User Community, Sources: Esri, HERE, Garmin, FAO, NOAA, USGS, © OpenStreetMap contributors, and the GIS User Community

Hays County Appraisal District, BIS Consulting - www.bisconsulting.com
Disclaimer: This product is for informational purposes only and has not been prepared for or be suitable for legal, engineering, or surveying purposes. It does not represent an on-the-ground survey

AGENDA ITEM REQUEST FORM

Hays County Commissioners Court

Tuesdays at 9:00 AM

Request forms are due in Microsoft Word Format via email by 2:00 p.m. on Wednesday.

AGENDA ITEM

Discussion and possible action to authorize the County Judge to execute a rental agreement between Hays County and Waterlogic USA to replace water units at the Transportation Departments Wimberley and Driftwood Yards.

ITEM TYPE	MEETING DATE	AMOUNT REQUIRED
ACTION-MISCELLANEOUS	June 23, 2020	$1,008 annually $300 installation (one-time fee)

LINE ITEM NUMBER

020-710-00.5480_230

AUDITOR USE ONLY

AUDITOR COMMENTS:

PURCHASING GUIDELINES FOLLOWED: N/A **AUDITOR REVIEW:** MARISOL VILLARREAL-ALONZO

REQUESTED BY	SPONSOR	CO-SPONSOR
Borcherding	SHELL	SMITH

SUMMARY

The water units used at the Transportation Department's Wimberley and Driftwood yards have stopped working. Since these are older units they can no longer be repaired since parts have been discontinued. This rental agreement will include replacement units and lower the monthly rental price presently in place.

waterlogic Better thinking. Better water

RENTAL AGREEMENT

Waterlogic USA • 866.917.7873
www.waterlogicusa.com • www.javasmartcoffee.com

Customer Information	Billing Information (If Different)
Hays County	
Name of Company: Chris Deichmann 512-393-7659	Billing Entity Name
Contact Name: 20290 FM 150 W / Phone Number	Billing Contact Attention To / Phone Number
Address (Street Only): Driftwood, TX 78619 / Hays	Billing Address / City, State, Zip
City, State, Zip: chris.deichmann@co.hays.tx.us / County	Accounts Payable Email
Primary Email Contact	EIN (Federal Tax ID Number Required) / Years in Business / # of Employees

Assigned Sales Representative Name and Contact Information: Dakota Hervey Dakota.hervey@waterlogicusa.com

Equipment Schedule

Quantity	Equipment Detail	Monthly Rental (Water/Ice)* or Service Fee (Coffee)	Minimum Consumable Spend Per Month PER UNIT (Coffee ONLY)*	Line Item Total
2	WL2 FW Tower	$42.00	$0.00	$84.00

**See reverse side for details regarding the Waterlogic/JavaSmart Coffee Program (Available in select US Markets)*

Terms and Payment Schedule:

Rental Term: 60

Total Monthly Payment = $84.00 (sum of all line items above) **

****All rental and consumable payments are subject to current applicable tax. Taxes will be calculated and reflected on all Customer invoices and/or billing statements.**

Payment
Payment Method:
Purchase Order
PO Number
Purchasing Contact

Billing
Send Method:

Special Provisions: ID:

Installation Fee $ 300

Billing Frequency: ◯ *Quarterly (WL Default)* ◯ *Annually* ◯ *Monthly*

INITIAL DUE:**
Sum of First Payment and Install $ 384.00
(Actual invoiced amount will depend on billing frequency selected plus all applicable taxes)

Agreed and Accepted By:

Customer: _____ Authorized Signature _____ Print Name

_____ Title _____ Date

WL: _____ Authorized Signature _____ Title _____ Date

The person signing this agreement on behalf of Customer specifically represents they have the authority to do so. Customer acknowledges having read and understood all of the terms and provisions of this Rental Agreement, including the reverse side hereof, and agrees to be bound by all of the terms and provisions. Customer agrees this Agreement is for the rental term indicated above and cannot be cancelled for any reason.

***Payment terms subject to Government Code Chapter 2251**

waterlogic Better thinking. Better water.

Terms and Conditions

1. Ownership: Waterlogic Americas, LLC (Waterlogic) or subsequent assignees is the sole owner/titleholder of the Water, Ice or Coffee Equipment (together with any upgrades, replacements, repairs, and additions, and including all any and all tubing, connectors, water and/or drain lines connected to the equipment, collectively "The Equipment") during the initial rental term, or any extension thereto.

2. Complete Agreement: Customer agrees that no promises or agreements have been made by Waterlogic or anyone else which are not part of this Rental Agreement (Agreement) and that any revisions to this Agreement must be signed by an authorized representative of Waterlogic and Customer.

3. Authorization/Ratification/Execution: This Agreement exists between Waterlogic and Customer. The person(s) signing this Agreement on behalf of Customer represents they have the authority to do so and that no information supplied by Customer is false. Payment by Customer on this Agreement signifies ratification of this authority and of this Agreement. Electronic, facsimile and email delivered signatures are deemed fully enforceable valid signatures as if such signatures were an original signature as of the date executed.

4. Location of Equipment: Customer will keep Equipment at the location specified in the Agreement. Only Waterlogic or an authorized agent must perform any relocation of Equipment (for reasonable and customary charges). Should Customer unilaterally move or relocate Equipment, Customer will be responsible for all costs associated with any damages that may arise, including damage to or loss of the unit or damages to the premises. If Waterlogic is requested to remove Equipment, or relocate Equipment, there will be a fee of $150 per unit within a 60 mile service area (relocation beyond a 60 mile service area subject to quote).

5. Installation, Use, Maintenance and Care: Waterlogic, or its authorized agent, agrees to install Equipment in accordance with manufacturer's specifications or subject to and in the case of any separately executed Service or Vendor Agreement. Customer agrees to use and maintain Equipment for drinking water and/or coffee and/or ice consumption only and not for any other purpose. Customer is responsible for any damages or service costs associated with unauthorized use. Customer will also make Equipment available and accessible to the Waterlogic or its authorized agent for maintenance in accordance with manufacturer's specifications, or subject to and in the case of any separately executed Service Agreement.

6. Right to Cure: In the event Equipment fails to perform as specified, above and beyond ordinary/customary service calls, and Waterlogic is unable to cure the problems within thirty (30) days of Customer's written notice of the specified failure, Waterlogic will replace Equipment with the same or like units at no charge to Customer.

* **7. Inception, Payment Due Dates, Other Charges and Invoicing:** Quarterly (or other periodic) rentals begin on the delivery and/or acceptance date and continue on the same day of each quarter (or other period) thereafter. The due date for the quarterly (or other periodic) payments due under this Agreement shall be established by Customer's first invoice on a net thirty (30) basis. If payment is not made by due date, a late charge of 1.5% per month or 18% per year of monies owed (18% annually) will be charged for each late payment. If Customer specifically elects to receive a mailed periodic invoice as a method of payment, an environmental surcharge of $5.00 will be added per paper invoice generated. Customer will make rent payments as set forth on page 1 of this Agreement. Waterlogic (or its successors or assignee) will establish the due date for the quarterly payments due under this Agreement and communicate the same to Customer from time to time. Waterlogic reserves the right to increase the rental rate annually but under no circumstances will that rate increase exceed more than 5% per annum.

8. Renewal: After the initial rental term or any extension thereto, this Agreement will renew for an additional extension period of twelve (12) months unless Customer notifies Waterlogic or its assignee in writing at least sixty (60) days prior to the expiration of the initial term or extension that Customer will not renew this Agreement. The annual renewal term will be at the current monthly rates reflected at time of renewal.

9. Payment Requirements: Customer's obligation extends through the full term of the Agreement, or any extension thereto, and cannot be cancelled. Should Customer request removal of Equipment prior to the end of term, Customer will be responsible for full payment on the remaining balance of the Agreement, or any extension therefor, together with any outstanding existing balance, plus a $150 early termination processing fee per unit, prior to removal. By electing either the credit card or Auto Debit/ACH forms of payment on the front side of this Agreement, Customer authorizes Waterlogic to charge their designated credit card or removed funds from their designated bank account for all agreed upon reoccurring charges or monthly rentals. Waterlogic reserves the right to charge or remove funds for monthly charges or reoccurring charges accordingly without requiring the Customer's signed authorization for the duration of this rental term, or any authorized extension thereto.

10. Liability, Insurance and Indemnity: Customer is responsible for the risk of loss for any destruction or damage to the Equipment and for any injuries due to the acts or omissions of the Customer. Customer shall promptly notify Waterlogic of any loss, destruction, damage or injury. No such loss, destruction or damage will relieve the Customer of its payment obligations under this agreement. Upon any loss, destruction or damage Waterlogic shall have the right to terminate this agreement and Customer shall be liable for unpaid rental payments for the remainder of the rental term plus the estimated fair market value of the Equipment at the end of the scheduled rental term. Customer further agrees to keep their premises and therefore the Equipment fully insured against losses during the rental term. If Waterlogic or its assignees request proof of insurance and Customer fails to provide said proof of insurance with in thirty (30) days of request, Customer agrees to pay Waterlogic the cost of the insurance obtained by Waterlogic or its assignee with in fifteen (15) days of notice of the same. Any insurance payments made for loss, damage or destruction of the Equipment shall be promptly paid to Waterlogic. Customer assumes all risks and liability for the loss of or damage to Equipment, for injury to any person or property of another and for all other risks and liabilities arising out of the improper use, operation, condition, possession or storage of Equipment.

11. Assignment of Interests: Customer may not sell, transfer, encumber or assign Equipment or Agreement without express prior written consent of Waterlogic or its assignee. Waterlogic may sell, transfer, encumber or assign all or part of its interests in Equipment and/or Agreement to its assignee and will notify Customer within 30 days of assignment. Any assignee of Waterlogic will have all of Waterlogic's rights and obligations under this Agreement, unless otherwise specified in writing and agreed upon by Customer.

12. Equipment Return: Upon proper notification and expiration of this Agreement, Customer shall make Equipment accessible to Waterlogic for pick up, together with all accessories, including water and/or drain lines, free from damage and in the same condition and appearance as when received by Customer, accounting for ordinary wear and tear. If Customer fails or refuses to return Equipment, Waterlogic shall have the right to take possession of Equipment and, for that purpose, to enter any premises where Equipment is located without being liable in any suit, action, defense, or other proceedings to Customer. Customer must pay any and all rents due until Waterlogic receives the Equipment.

13. Default: If Customer does not pay any amount when due, or breaches any other term of the Agreement, Waterlogic or its assignee may deem Customer in default of the Agreement. Waterlogic or its assignee retains the right to exercise any and all legal remedies available by applicable laws, including, but not limited to, repossession of Equipment, termination of maintenance agreements, acceleration of the remaining balance due under this contract and reimbursement of reasonable attorney fees and/or costs associated with any action, repossession, or disposal of Equipment.

14. Business Agreement: This Agreement is for business purposes and will be governed under the laws of the state of California. Should any legal action, suit or proceeding be initiated arising out of this Agreement, or the Equipment covered hereby, such action shall be brought in any court located in Contra Costa County, California, or any such court having jurisdiction over the parties all at the sole election of Waterlogic or its Assignee. All parties hereto waive any right to a trial by jury. If any part of the Agreement is found to be invalid, then it shall not invalidate any other parts(s), and the Agreement shall be modified as permitted by law.

15. Other Rights/Obligations:

a) Customer agrees Waterlogic's, or its assignee's, failure to exercise any of their rights doesn't prevent them from exercising them at a later date.

b) Taxes/Fees: Customer agrees to pay any and all taxes or any associated regulatory fees not imposed by Waterlogic related to the use of the Equipment. To the extent Waterlogic pays any of the foregoing on Customer's behalf, Customer agrees to promptly reimburse Waterlogic for such amount plus a processing fee. These include, but are not limited to: sales, use, and any applicable property taxes or associated third-party fees, if any. If Customer is an entity that is exempt from sales tax, Customer must provide confirmation and a valid true and legal copy of its Certificate of Sales Tax Exemption to Waterlogic for sales tax to be removed from invoices.

c) Service / Surcharge: Waterlogic reserves the right to charge Customer for scheduled trips canceled or rescheduled by Customer. Waterlogic also reserves the right to institute service charges, including fuel surcharges, as market conditions warrant. Customer grants Waterlogic (and its successors and assigns) authorization to sign and file at any Uniform Commercial Code financing statements deemed necessary or desirable by Waterlogic (or its successors and assigns) to protect its interests in Equipment.

Special Terms Regarding Coffee Equipment, Beverage Systems and Coffee Consumables

a) *Waterlogic/JavaSmart Exclusivity*: Customer agrees to purchase any and all coffee, coffee allied and beverage system products exclusively from Waterlogic/JavaSmart during the specific rental period or any extension thereto. Non-Waterlogic/JavaSmart products may be expired, too dry, too oily, or may coagulate and will likely cause Equipment maintenance problems, resulting in additional service requirements that will be chargeable to Customer. Use o f other products may also void the Equipment warranty.

b) *Customer Required Maintenance:* Customer is required to perform basic regular maintenance on all Coffee Equipment in accordance with manufacturer's specifications as provided to Customer upon each placement. Customer acknowledges that this required maintenance is essential for the proper functioning of the Coffee Equipment during the full duration of this Agreement.

c) *Minimum Monthly Consumable Spend*: For all qualifying coffee systems defined in the Equipment Schedule on page one, Customer is subject to a minimum monthly consumable spend PER COFFEE UNIT as detailed in the corresponding column. Should Customer not meet the minimum monthly consumable spend, Customer will be invoiced only the difference between the minimum monthly consumable requirement and the actual monthly spend per coffee unit. Minimum monthly consumable orders are not applicable for water or ice systems rentals. Coffee orders can be placed via www.javasmartcoffee.com.

AGENDA ITEM REQUEST FORM

Hays County Commissioners Court

Tuesdays at 9:00 AM

Request forms are due in Microsoft Word Format via email by 2:00 p.m. on Wednesday.

AGENDA ITEM

Discussion and possible action to award RFP 2020-P11 Election Ballot Printing, Insertion and Mailing Services to Runbeck Election Services and authorize staff and counsel to negotiate a contract.

ITEM TYPE	MEETING DATE	AMOUNT REQUIRED
ACTION-MISCELLANEOUS	July 21, 2020	

LINE ITEM NUMBER

AUDITOR USE ONLY

AUDITOR COMMENTS:

PURCHASING GUIDELINES FOLLOWED: N/A **AUDITOR REVIEW:** N/A

REQUESTED BY	SPONSOR	CO-SPONSOR
Jennifer Anderson	BECERRA	N/A

SUMMARY

On June 2, 2020 the Commissioners Court approved specifications and authorized Purchasing to solicit for Election Mail Ballot Services. Purchasing received a response from the following firm:

Runbeck Election services

After evaluation of the proposal, the evaluation committee's recommendation is to pursue negotiations with Runbeck Election Services. Upon successful negotiations, a contract will be brought back before court to approve and finalize contract award.

Attached: Runbeck Election Services - Related Party Disclosure Form

XIV. Related Party Disclosure Form

Hays County strives to provide financial transparency to its taxpayers. Completion of this form will allow for added transparency into the procurement process by disclosing Vendor relationships with current or former Hays County employees. The existence of a relationship may not present a legal or ethical conflict for a Vendor. However, disclosure will allow for consideration of potential conflicts and/or ways to eliminate conflicts.

A Vendor who Employs any of the following is required to disclose the relationship on this form:

- Current Hays County employee (including elected or appointed official)(Complete Section A)
- Former Hays County employee who has been separated from Hays County for no less than four (4) years (including elected or appointed official) (Complete Section B)
- Person related within the 2nd degree of consanguinity or affinity to either of the above[1] (Complete Section C)

If no known relationships exist, complete Section D.

This form is required to be completed in full and submitted with the proposal package. A submitted proposal package that does not include this completed form will be considered non-responsive and will not be eligible for an award.

Section A: Current Hays County Employee

N/A

Employee Name Title

Section B: Former Hays County Employee

N/A

Employee Name Title Date of Separation from County

Section C: Person Related to Current or Former Hays County Employee

N/A

Employee or Former Employee Name Title

Name of Related Person Title Relationship

Section D: No Known Relationships

If no relationships in accordance with the above exist or are known to exist, provide a written explanation below:
Runbeck Election Services, Inc. does not currently, nor has in the past, employed a relative of any Hays County employee.

Attach additional pages if necessary.

I, the undersigned, hereby certify that the information provided is true and complete to the best of my knowledge.

Runbeck Election Services, Inc.

Name of Vendor

Signature of Certifying Official

Vice President, Sales

Title of Certifying Official

Rizwan Fidai

Printed Name of Certifying Official

06/23/20

Date

(1)A degree of relationship is determined under Texas Government Code Chapter 573. (as outlined below)

Relationship of Consanguinity				
	1st Degree	**2nd Degree**	**3rd Degree***	**4th Degree***
Person	child or parent	grandchild, sister, brother or grand-parent	great-grandchild, niece, nephew, aunt,* uncle* or great-grandparent	great-great-grandchild, grandniece, grandnephew, first cousin, great aunt,* great uncle* or great-great-grandparent
* An aunt, uncle, great aunt or great uncle is related to a person by consanguinity only if he or she is the sibling of the person's parent or grandparent.				

Relationship of Affinity		
	1st Degree	**2nd Degree**
Person	spouse, mother-in-law, father-in-law, son-in-law, daughter-in-law, stepson, stepdaughter, stepmother or stepfather	brother-in-law, sister-in-law, spouse's grandparent, spouse's grandchild, grandchild's spouse or spouse of grandparent

"Vendor" shall mean any individuals or entity that seeks to enter into a contract with Hays County.

"Employs" shall mean any relationship wherein Vendor has made arrangements to compensate an individual, directly or by way of a business organization in which the individual has a sharehold or ownership interest, even if that arrangement is contractual and/or on an hourly-charge basis.

AGENDA ITEM REQUEST FORM

Hays County Commissioners Court

Tuesdays at 9:00 AM

Request forms are due in Microsoft Word Format via email by 2:00 p.m. on Wednesday.

AGENDA ITEM

Discussion and possible action to authorize the Constable Pct. 4 Office to utilize salary savings to purchase essential equipment for Motor Officers and Fleet Maintenance and amend the budget accordingly.

ITEM TYPE	MEETING DATE	AMOUNT REQUIRED
ACTION-MISCELLANEOUS	July 21, 2020	$4,000

LINE ITEM NUMBER

001-638-00]

AUDITOR USE ONLY

AUDITOR COMMENTS:

PURCHASING GUIDELINES FOLLOWED: N/A **AUDITOR REVIEW:** MARISOL VILLARREAL-ALONZO

REQUESTED BY	SPONSOR	CO-SPONSOR
Ron Hood, Constable	SMITH	N/A

SUMMARY

The Constable would like to utilize Salary Savings for needed vehicle maintenance and repairs for his current Fleet. Additionally, funds are needed for an increase cost of Communication Equipment to finalize the purchase of the following essential equipment for its Motor Officer positions:

Two (2) PVP-Freedom Communication Kit ($455.10)

Funds were budgeted during the FY20 budget process for the purchase of communication equipment. However, the communication equipment purchased was not compatible with the current radio system. The additional funds will be used to offset the purchase of the increased cost of the approved motorcycle unit. Funds are available due to the delayed start date of the new Deputy Constable.

Budget Amendment:
Increase 638-00.5413 Vehicle Maintenance and Repair $3,544
Increase 638-00.5715_400 Communication Eqpt_Ops $456
Decrease 638-00.5021 Staff Salaries ($4,000)

AGENDA ITEM REQUEST FORM

Hays County Commissioners Court

Tuesdays at 9:00 AM

Request forms are due in Microsoft Word Format via email by 2:00 p.m. on Wednesday.

AGENDA ITEM

Discussion and possible action to issue a variance from Hays County Rules for Onsite Sewage Facilities Section M for an OSSF permit at 901 Williamson Rd, Buda, TX 78610.

ITEM TYPE	MEETING DATE	AMOUNT REQUIRED
ACTION-MISCELLANEOUS	July 21, 2020	

LINE ITEM NUMBER

AUDITOR USE ONLY

AUDITOR COMMENTS:

PURCHASING GUIDELINES FOLLOWED: N/A **AUDITOR REVIEW:** N/A

REQUESTED BY	SPONSOR	CO-SPONSOR
STRICKLAND	SHELL	N/A

SUMMARY

The owner of 901 Williamson Road is requesting a variance from section M of the Hays County Rules for onsite sewage facilities to allow for a residential septic system to be built on his property. He is requesting to use residential specs for new OSSF being constructed.

M. Amendment to Section 285.32 (Criteria for Sewage Treatment Systems)
1. The following requirements for OSSFs other than residential OSSFs (nonresidential OSSFs) are imposed in addition to those set forth in 30 TAC §285.32:
(A) For Non-Residential OSSFs, the site specific evaluation materials, prepared by a Texas licensed professional engineer or a Texas registered professional sanitarian, must include hydraulic loading calculations and influent and effluent wastewater strength calculations.
(B) Non-Residential OSSFs and multi-family OSSFs shall include a hydraulic equalization tank prior to the treatment system. The hydraulic equalization tank shall be designed with sufficient storage to ensure that there is at least 75% of one day's flow (at the average daily design flow) between the pump-on level and alarm activation level, and one-day's flow above the alarm activation level and below the inlet of the tank, unless duplex pumps are used and designed in accordance with 30 TAC §285.34(b)(3). The rate of flow from the hydraulic equalization tank into the treatment system shall be controlled to uniformly distribute the flow over a twenty four (24) hour period at a rate no greater than the maximum design capacity of the treatment system. In cases where Non-residential OSSFs are expected to have peak flows that exceed the average daily design flow, the Department will require an Applicant to submit calculations of sufficient storage in conjunction with the other Planning Materials required for the design of the system. Hydraulic equalization will not be required prior to standard treatment if the treatment system is at least 25% larger than required in 30 TAC §285.91 Table II.

Variance provided in backup.

AGENDA ITEM REQUEST FORM

Hays County Commissioners Court

Tuesdays at 9:00 AM

Request forms are due in Microsoft Word Format via email by 2:00 p.m. on Wednesday.

AGENDA ITEM

Discussion and possible action to identify funds for Administration Costs associated with the Emergency Cash Assistance Program (ECAP) pursuant to Chapter 381 of the Texas Local Government Code and amend the budget accordingly.

ITEM TYPE	MEETING DATE	AMOUNT REQUIRED
ACTION-MISCELLANEOUS	July 21, 2020	$24,000

LINE ITEM NUMBER

N/A

AUDITOR USE ONLY

AUDITOR COMMENTS:

PURCHASING GUIDELINES FOLLOWED: N/A **AUDITOR REVIEW:** MARISOL VILLARREAL-ALONZO

REQUESTED BY	SPONSOR	CO-SPONSOR
	SHELL	N/A

SUMMARY

On May 1, 2020 the Commissioners Court declared an emergency and set aside $500k for an Emergency Cash Assistance Program (ECAP) for Small Business as a result of the Covid-19 Pandemic. In an effort to streamline the process, the Court executed an agreement with PEOPLEFUND to administer the ECAP program. Contingency funding will be utilized for program administration.

Budget Amendment:
Decrease Co-Wide Contingencies .5399
Increase Professional Administrative Fees .5303

AGENDA ITEM REQUEST FORM

Hays County Commissioners Court
Tuesdays at 9:00 AM

Request forms are due in Microsoft Word Format via email by 2:00 p.m. on Wednesday.

AGENDA ITEM

Executive Session pursuant to Sections 551.071 and 551.074 of the Texas Government Code: consultation with counsel and deliberation regarding all individual positions in the Hays County Office of Emergency Services. Possible discussion and/or action may follow in open Court including but not limited to appointment and employment of the Hays County Fire Marshal (contingent upon an acceptable background check and acceptance of an offer of employment) and/or the hiring of the Director of the Office of Emergency Services (contingent upon an acceptable background check and acceptance of an offer of employment).

ITEM TYPE	MEETING DATE	AMOUNT REQUIRED
EXECUTIVE SESSION	July 21, 2020	

LINE ITEM NUMBER

AUDITOR USE ONLY

AUDITOR COMMENTS:

PURCHASING GUIDELINES FOLLOWED: N/A **AUDITOR REVIEW:** N/A

REQUESTED BY	SPONSOR	CO-SPONSOR
	SHELL	N/A

SUMMARY

Summary to be provided in Executive Session.