Commissioners Court -- MARCH 26, 2024
NOTICE OF A MEETING OF THE
COMMISSIONERS COURT OF HAYS COUNTY, TEXAS

This Notice is posted pursuant to the Texas Open Meetings Act. (VERNONS TEXAS CODES ANN. GOV. CODE CH.551). The Hays County Commissioners Court will hold a meeting at **9:00 A.M.** on MARCH 26, 2024**,** in the Hays County Courthouse, Room 301, San Marcos, Texas. An Open Meeting will be held concerning the following subjects:

A. **CALL TO ORDER**

B. **INVOCATION**

C. **PLEDGE OF ALLEGIANCE - Pledge of Allegiance to the American Flag & Pledge of Allegiance to the Texas Flag**

D. **ROLL CALL**

E. **PUBLIC COMMENTS**

At this time 3-MINUTE comments will be taken from the audience on Non-Agenda related topics. To address the Court, please submit a Public Participation/ Witness Form to the County Clerk. Please Complete the Public Participation/ Witness Form in its Entirety.
NO ACTION MAY BE TAKEN BY THE COURT DURING PUBLIC COMMENTS .

F. **PRESENTATIONS & PROCLAMATIONS**

1. Presentation of Hays County Employee Service and Retirement Awards. **BECERRA/MILLER**

2. Presentation by Mike Jones recognizing Cumorah Eldridge and Andrew Cox, both with The Texas School Safety Center, as the Office of Emergency Service's Community partner of 2023. **BECERRA/MIKE JONES**

3. Presentation by Austin Pets Alive regarding Overview of Final Recommendations and Operation of Pet Resource Center. **BECERRA**

G. **CONSENT ITEMS**

The following may be acted upon in one motion.
A Commissioner, the County Judge, or a Citizen may request items be pulled for separate discussion and/or action.

1. Approve payments of County invoices. **VILLARREAL-ALONZO**

2. Approve the payment of Juror checks. **TENORIO**

3. Approve the payment of United Healthcare claims and authorize an additional disbursement in an amount not to exceed $500,000.00 to the healthcare claims account. **VILLARREAL-ALONZO**

4. Approve the payment of the March 31, 2024 payroll disbursements in an amount not to exceed $5,200,000.00 effective March 28, 2024 and post totals for wages, with-holdings, deductions, and benefits on the Hays County website once finalized. **BECERRA/DORSETT**

5. Approve Commissioners Court Minutes of March 12, 2024. **BECERRA/CARDENAS**

6. Approve and confirm the appointment of Clark Flynn as a regular full-time Deputy Constable in the Hays County Constable's Precinct 1 Office. **INGALSBE/PETERSON**

7. Approve and confirm the appointment of Travis Talbot as a regular full-time Deputy Constable in the Hays County Constable Precinct 2 Office. **COHEN/TORRES**

8. Approve the Hispanic Heritage Exhibition Walk Celebration event on the courthouse grounds sponsored by Centro Cultural Hispano de San Marcos and LULAC Council #654 to be held on September 14, 2024, that shall include commercial vendors. **BECERRA**

9. Approve the appointment of Joseph Malone to the Board of Commissioners for Hays County Emergency Services District #4 for a term ending December 31, 2025 to fill the vacancy created by the resignation of Chuck Ware. **SHELL**

10. Approve the appointment of Manuel Grafia to the Board of Commissioners for Hays County Emergency Services District #4 for a term ending December 31, 2024 to fill the vacancy created by the resignation of Ron Spangenberg. **SHELL**

11. Authorize the County Judge to execute an agreement with Core Office Interiors for the purchase and installation of furniture for the Health Department lobby in the amount of $6,308.33 and amend the budget accordingly. **INGALSBE/COHEN/T.CRUMLEY**

12. Ratify the submission of a grant application to the Office of The Governor, State Crisis Grant Program in the amount of $531,547.00 related to fentanyl overdoses. **BECERRA/T.CRUMLEY**

13. Authorize the submission of a resolution and grant application to the Office of The Governor, Homeland Security Grant Program in the amount of $56,615.00. **SHELL/T.CRUMLEY**

14. Authorize the submission of a grant application to the Office of the Governor, Homeland Security Division, Urban Area Security Initiative - Regular Projects in the amount of $7,300.00. **BECERRA/CRUMLEY/JONES**

15. Authorize the submission of a grant application to the Office of the Governor, Homeland Security Division, Urban Area Security Initiative - Regular Projects in the amount of $50,755.10. **BECERRA/CRUMLEY/JONES**

16. Authorize the submission of a grant application to the Office of the Governor, Homeland Security Division, Urban Area Security Initiative - Law Enforcement Terrorism Prevention Act Projects in the amount of $582,900.00. **INGALSBE/CRUMLEY/CUTLER**

17. Authorize a waiver to the purchasing policy for the Constable, Pct. 4 Office, to purchase one (1) motor officer helmet valued at $604.80 from Super Seer Corporation and amend the budget accordingly. **SMITH/HOOD**

18. Authorize the District Attorney to purchase one replacement Latitude 5540 Laptop for the Civil Division Legal Support Services Specialist and amend the budget accordingly. **INGALSBE**

19. Authorize payment to SI Mechanical for repairs to the industrial freezer at the Juvenile Center in the amount of $564.25 where no purchase order was issued as required per the Hays County Purchasing Policy. **INGALSBE/LITTLEJOHN**

20. Authorize payment to Firetrol Protection Systems, Inc. in the amount of $2,250.11 for repairs to broken sprinkler heads at the Government Center as requested by Building Maintenance in which no purchase order was issued as required per the Hays County Purchasing Policy. **SHELL/T.CRUMLEY**

21. Authorize the Civil Division of the Hays County Criminal District Attorney's Office to purchase proclamation Folders for Commissioners Court use and amend the budget accordingly. **SHELL**

22. Authorize payment to Security One, Inc. in the amount $759.32 for the installation and programming of a new keypad to the security alarm panel of the Precinct 5 Building as requested by Building Maintenance in which no purchase order was issued as required per the Hays County Purchasing Policy. **COHEN/T.CRUMLEY**

23. Authorize payment to Amazon in the amount of $215.25 for the purchase of four wall art pieces for the Judicial Services Department and amend the budget accordingly. **COHEN/INGALSBE/HUNT**

24. Approve the Hart Intercivic repair estimate in the amount of $7,000.00 for ten Duo Touch and four Controllers that are no longer under warranty; authorize a discretionary exemption pursuant to Texas Local Government Code Chapter 262.024 (a)(7)(D) and amend the budget accordingly. **SHELL/DOINOFF**

25. Approve specifications for IFB 2024-B10 Road Building Materials - General Road Construction and authorize Purchasing to solicit bids and advertise. **BECERRA/BORCHERDING**

26. Approve extension of IFB 2019-B02 Road Building Materials - General Road Construction with Brauntex Materials, Inc. and Colorado Materials, Ltd. for a period not to exceed sixty-one (61) days (May 31, 2024). **BECERRA/BORCHERDING**

27. Approve Amendment 1 for RFP 2022-P12 Pet Resource Center - Project Coordinator with Austin Pets Alive! for a period not to exceed three months, June 30, 2024 and amend the budget accordingly. **BECERRA/INGALSBE/HUNT**

28. Approve Utility Permits. **COHEN/SHELL/BORCHERDING**

29. Approve renewal of RFP 2020-P15 Traffic Counter Inspection and Maintenance with JM Engineering, LLC for two (2) additional years, with proposed price increases. **BECERRA/BORCHERDING**

30. Approve renewal of RFP 2023-P04 Countywide Electrical with CT Electric for one (1) additional year. **BECERRA/T.CRUMLEY**

31. Authorize the execution of rental agreements with Herc Rentals for three fuel tanks, valued at $3,814.00, for the Sheriff's Office. **SMITH/CUTLER**

32. Approve out-of-state travel for Emergency Communications Manager Megan Jones and Emergency Communications Officers Ashley Klemann, Beth Ball, Madison Wattenbarger, and Tori Tyler to attend the Navigator Conference on April 16-18, 2024, in National Harbor, MD. **INGALSBE/CUTLER**

33. Ratify the acceptance of a $1,000.00 donation to the Jr. Deputy Academy from the San Marcos Lions Club and amend the budget accordingly. **INGALSBE/CUTLER**

34. Ratify the acceptance of donations totaling $7,881.00 on behalf of the Sheriff's Office Honor Guard and amend the budget accordingly. **INGALSBE/CUTLER**

35. Authorize the Commissioner Pct. 4 Office to convert the temporary Community Outreach Specialist, slot 1127-003 to full-time with benefits effective April 1, 2024 and amend the budget accordingly. **SMITH**

36. Authorize the Sheriff's Office to purchase two 9mm Glock 17s valued at $357.00 each. **INGALSBE/CUTLER**

37. Ratify the acceptance of an Avata Pro Combo to the Sheriff's Office Drone Team valued at $1,345.00 and amend the budget accordingly. **INGALSBE/CUTLER**

38. Amend various departmental operating, special revenue and capital project budgets in preparation for the County's Fiscal Year 2023 year-end process. **BECERRA/DORSETT**

39. Authorize the Constable Pct. 3 Office to utilize Dana Safety Supply for the installation of three vehicle docking stations and amend the budget accordingly. **SHELL/MONTAGUE**

H. **ACTION ITEMS**

I. **ROADS**

1. Discussion and possible action to approve the selection of Cobb, Fendley & Associates, Inc. to provide utility coordination services for the Jacobs Well Curve project in Precinct 3; and authorize staff and counsel to negotiate a contract. **SHELL/BORCHERDING**

2. Discussion and possible action to approve the selection of LJA Engineering, Inc. to provide right-of-way acquisition services for the Jacobs Well Curve project in Precinct 3; and authorize staff and counsel to negotiate a contract. **SHELL/BORCHERDING**

3. Discussion and possible action approve the selection of Pape-Dawson Engineers to study Right-of-Way requirements for the extension of Posey Road from CR 266 to Centerpoint Road; and authorize staff and counsel to negotiate a contract. **INGALSBE/BORCHERDING**

4. Discussion and possible action to approve the selection of American Structurepoint, Inc. (ASI) to provide engineering design services for RM 150 Realignment from I-35 (at Yarrington Road) to RM 150 at Arroyo Ranch Road in Precinct 3; and authorize staff and counsel to negotiate a contract. **SHELL/BORCHERDING**

5. Discussion and possible action to call for a public hearing on April 9,2024 to establish a "No Parking" zone along the south side (school side) of Vista Gardens Drive from Aura Drive to Sunbright Boulevard for Sunfield Elementary School. **COHEN/BORCHERDING**

6. Discussion and possible action to consider the release of the subdivision bond #PB3010406555 in the amount of $843,062.00 for Headwaters at Barton Creek Ph.4-Sec. 5 and the acceptance of roads and surface drainage improvements into the County Road Maintenance System. **SMITH/BORCHERDING**

J. **MISCELLANEOUS**

1. Discussion and possible action to approve the appointment of Stephen Seddig as Hays County Fire Marshal, with a salary exception up to step 9 effective March 26, 2024; and approve the official bond pursuant to Sections 352.011 and 352.012 of the Texas Local Government Code. **BECERRA/MIKE JONES**

2. Discussion and possible action to authorize the execution of the Hays County American Rescue Plan Recovery Donation Agreement between Hays County and Forever 15 and amend the budget accordingly. **SMITH**

3. Discussion and possible action to award RFP 2024-P01 Delinquent Justice Court Fines and Fees Collection Services to McCreary Veselka Bragg & Allen P.C. (MVBA) and authorize staff and the District Attorney Civil Division to negotiate a contract. **BECERRA/HUNT**

4. Discussion and possible action to authorize the Juvenile Center and Juvenile Probation Department to re-grade all Juvenile Supervision Officer positions (37 slots) Grade 115 to Grade 120; re-grade all Lieutenant positions (8 slots) Grade 119 to Grade 123; and re-grade the Training Coordinator position (1 slot) Grade 118 to Grade 124 effective April 1, 2024. **INGALSBE/LITTLEJOHN**

5. Discussion and possible action to execute the Memorandum of Understanding (MOU) between Hays County Office of Emergency Services and the City of San Marcos allowing the city access to WETmap data. **BECERRA/MIKE JONES**

6. Discussion and possible action to authorize the acceptance of a grant award from the Texas Comptroller of Public Accounts, Rural Law Enforcement Grant Program for the Sheriff's Office in the amount of $500,000.00 and amend the budget accordingly. **INGALSBE/CUTLER/CRUMLEY**

7. Discussion and possible action to authorize the acceptance of a grant award from the Texas Comptroller of Public Accounts, Rural Law Enforcement Grant Program for the District Attorney's Office in the amount of $275,000.00; establishing one (1) new Chief Attorney VII position and amend the budget accordingly. **INGALSBE/HIGGINS**

8. Discussion and possible action to approve the 9-1-1 Addressing and Street Name Interlocal Agreement (ILA) between Hays County and the City of Wimberley. **SHELL/PACHECO**

9. Discussion and possible action to approve the renaming of a private driveway in Precinct 4, from CF Ranch Road to Ledgetop Lane. **SMITH/PACHECO**

10. Discussion and possible action to accept the resignation of Commissioner Debbie Gonzales Ingalsbe from the Capital Area Council of Governments (CAPCOG) General Assembly and approve the appointment of Commissioner Walt Smith to the CAPCOG General Assembly to replace her effective March 26, 2024. **INGALSBE**

11. Discussion and possible action to accept the Fiscal Year 2023 Hays County Annual Comprehensive Financial Report as audited by ABIP, PC Certified Public Accountants. **INGALSBE/VILLARREAL-ALONZO**

12. Discussion and possible action to award and execute a contract for IFB 2024-B07 Cemetery Maintenance to Primero TX LLC, dba Primero TX Landscaping. **BECERRA/BORCHERDING**

13. Discussion and possible action to award and execute a contract for IFB 2024-B06 Sentinel Peak - Asbestos Abatement & Building Demolition to Tasman Geopsciences, Inc. dba Tasma, Inc. and amend the budget accordingly. **SHELL/T.CRUMLEY**

14. Discussion and possible action to authorize the Mental Health Specialty Court to purchase consumable items for the Spring Mental Health Workshops to be held April 4th, 5th and 11th and amend the budget accordingly. **COHEN/INGALSBE/BROWN**

15. Discussion and possible action to consider granting a variance from the governing 1977 On-Site Sewage Facility (OSSF) rules for the property located at 2850 Windy Hill Rd, Buda, TX. **INGALSBE/PACHECO**

16. Discussion and possible action to authorize the County Judge to execute Contract Amendment No. 1 with Haitus Wellness, LLC. related to Trauma Conscious Yoga Therapy sessions for Mental Health Court participants. **INGALSBE/COHEN/BROWN**

K.

EXECUTIVE SESSIONS

The Commissioners Court will announce that it will go into Executive Session, if necessary, pursuant to Chapter 551 of the Texas Government Code, to receive advice from Legal Counsel to discuss matters of land acquisition, litigation and personnel matters as specifically listed on this agenda. The Commissioners Court may also announce it will go into Executive Session, if necessary, to receive advice from Legal Counsel regarding any other item on this agenda.

1. Executive Session pursuant to Sections 551.071 and 551.072 of the Texas Government Code: consultation with counsel and deliberation regarding the purchase, exchange, lease and/or value of real property associated with Parks and Open Space Projects being considered by Hays County. Possible discussion and/or action may follow in open court. **BECERRA**

2. Executive Session pursuant to Sections 551.071 and 551.072 of the Texas Government Code: consultation with counsel and deliberation to consider a resolution determining the necessity of and authorizing the use of the County's power of eminent domain to acquire fee simple title, and all the necessary property rights over, under and across land being Part 1: 0.0215 acres, Part 2: 0.0263 acres, and Part 3: 0.0156 acres out of that certain 247.559 acres BCG Uhland, LP, and which is required for the construction of the proposed Cotton Gin roadway improvements and utility adjustments, and take other appropriate action (Tract 35: Part 1, 2 and 3). Possible discussion and/or action may follow in open court. **INGALSBE**

3. Executive Session pursuant to Sections 551.071 and 551.074 of the Texas Government Code: deliberation regarding employment and duties of all positions within the Transportation Department. Possible discussion and/or action may follow in open court. **SHELL/BORCHERDING**

4. Executive Session Pursuant to Sections 551.071 and 551.087 of the Texas Government Code: Consultation with counsel and deliberation regarding economic development negotiations associated with Project Snap Dragon, Project Peanut Butter, Project Husky and Project Forward Motion. Possible discussion and/or action may follow in open court. **BECERRA**

5. Executive Session pursuant to Section 551.071 of the Texas Government Code: consultation with counsel regarding pending and/or contemplated litigation involving Hays County. Possible action may follow in open court. **SHELL**

6. Executive Session pursuant to Sections 551.071 and 551.089 of the Texas Government Code: consultation with counsel and deliberation regarding the deployment and/or implementation of critical infrastructure, including but not limited to, emergency services/management response for Hays County. Possible discussion and/or action may follow in open court. **BECERRA**

7. Executive Session pursuant to Sections 551.071 and 551.072 of the Texas Government Code: consultation with counsel and deliberation regarding Cause Numbers 22-0249-C, 22-0250-C, and 22-0251-C. Possible discussion and/or action may follow in open court. **SMITH**

L.

STANDING AGENDA ITEMS

The Commissioners Court utilizes Standing Agenda Items to address issues that are frequently or periodically discussed in court. This section allows the Court to open the item when a need for discussion arises.

1. Discussion and possible action related to the burn ban. **BECERRA**

2. Discussion related to the Hays County inmate population, to include current population counts and costs. **BECERRA**

3. Discussion of issues related to the Hays County Jail, and the planning of projects pertaining to the public safety facilities needs within the County. Possible action may follow. **INGALSBE/CUTLER**

4. Discussion and possible action regarding Hays County's use of federal or other grant funding related to COVID-19 response including but not limited to the American Rescue Plan Act (ARPA) and the Emergency Rental Assistance Program (ERAP). **BECERRA**

5. Discussion and possible action related to proposed bills in the 87th Regular Session of the Texas Legislature and to consider adoption of resolution(s) regarding proposed bills. The Court may opt to withdraw to Executive Session during this item to consult with legal counsel pursuant to Texas Government Code 551.071. **SMITH**

6. Updates on measurable advancement of Judicial Services to include the areas of staffing, equipment, training, operations and policy, by Assistant Director of Judicial Services Albert Sierra. **BECERRA**

M. **ADJOURNMENT**

Posted by 5:00 o'clock P.M. on the 22nd day of March, 2024
COMMISSIONERS COURT, HAYS COUNTY, TEXAS

_____
CLERK OF THE COURT

Hays County encourages compliance with the Americans with Disabilities Act (ADA) in the conduct of all public meetings. To that end, persons with disabilities who plan to attend this meeting and who may need auxiliary aids such as an interpreter for a person who is hearing impaired are requested to contact the Hays County Judge's Office at (512) 393-2205 as soon as the meeting is posted (72 hours before the meeting) or as soon as practical so that appropriate arrangements can be made. While it would be helpful to receive as much advance notice as possible, Hays County will make every reasonable effort to accommodate any valid request regardless of when it is received. Braille is not available.

AGENDA ITEM REQUEST FORM: F. 1.

Hays County Commissioners Court

Date: 03/26/2024

Requested By: Miller

Sponsor: Judge Becerra

Agenda Item

Presentation of Hays County Employee Service and Retirement Awards. **BECERRA/MILLER**

Summary

Presentation of Hays County Employee Service and Retirement Awards

Attachments

March 2024 Service and Retirement Awards

March 2024 Service and Retirement Awards

Employee	Department	Years
MOORE, BENJAMIN	District Courts	20
CALDERA, ALEJANDRO	Transportation	20
TREVINO, DAISY	Sheriff's Office	15
RODGERS, JUSTIN	Sheriff's Office	5
LISKA, ANNA	Sheriff's Office	5
LARSON, JOSHUA	Sheriff's Office	5
AYALA, MAXIMO	Sheriff's Office	5
SALAZAR, ROY	Sheriff's Office	5
HENNING, KATHRYN	Tax Assessor Collector's Office	5
AVALOS, JOANN	Justice of the Peace Pct 1,2 Ofc	5
SHEPHERD, ANTHONY	Parks	5
POLK, DILLON	Emergency Management	5
AULTMAN, NATASHA	District Clerk's Office	1
VEGA, GEORGE	Sheriff's Office	1
LEACH, CRYSTAL	Sheriff's Office	1
HAYES, LAUREN	District Attorney's Office	1
GARZA-MORGENROTH, VERONICA	Sheriff's Office	1
GORDON, KEITH	Sheriff's Office	1
JOHNSON, COLTEN	Transfer Station	1
SANTANA, MICHAEL	Sheriff's Office	1
SCHWALBACH, NICOLE	District Attorney's Office	1
SAUCEDA, ARNULFO Jr.	Sheriff's Office	1
Retiree		
WILLS, LAURIE	Juvenile Detention Center	

AGENDA ITEM REQUEST FORM: F. 2.

Hays County Commissioners Court

Date: 03/26/2024

Requested By: Mike Jones

Sponsor: Judge Becerra

Agenda Item

Presentation by Mike Jones recognizing Cumorah Eldridge and Andrew Cox, both with The Texas School Safety Center, as the Office of Emergency Service's Community partner of 2023. **BECERRA/MIKE JONES**

Summary

Attachments

Andrew Cox
Eldridge

Community Partner of the Year

IS PROUDLY PRESENTED TO

Andrew Cox

Outstanding Service, Commitment and Dedication
Supporting the Mission of the Hays County Office of Emergency Services
2023

Mike Jones
Director
Hays County Office of
Emergency Services

TJ Browder
Assistant Director
Hays County Office of
Emergency Services

Community Partner of the Year

IS PROUDLY PRESENTED TO

Curmorah Eldredge

Outstanding Service, Commitment and Dedication
Supporting the Mission of the Hays County Office of Emergency Services
2023

Mike Jones
Director
Hays County Office of
Emergency Services

TJ Browder
Assistant Director
Hays County Office of
Emergency Services

AGENDA ITEM REQUEST FORM: F. 3.

Hays County Commissioners Court

Date: 03/26/2024

Requested By:

Sponsor: Judge Becerra

Agenda Item

Presentation by Austin Pets Alive regarding Overview of Final Recommendations and Operation of Pet Resource Center. **BECERRA**

Summary

AGENDA ITEM REQUEST FORM: G. 4.

Hays County Commissioners Court

Date: 03/26/2024

Requested By: Vickie Dorsett, Budget Officer

Sponsor: Judge Becerra

Agenda Item

Approve the payment of the March 31, 2024 payroll disbursements in an amount not to exceed $5,200,000.00 effective March 28, 2024 and post totals for wages, with-holdings, deductions, and benefits on the Hays County website once finalized. **BECERRA/DORSETT**

Summary

AGENDA ITEM REQUEST FORM: G. 5.

Hays County Commissioners Court

Date: 03/26/2024

Requested By: Elaine H. Cardenas

Sponsor: Judge Becerra

Agenda Item

Approve Commissioners Court Minutes of March 12, 2024. **BECERRA/CARDENAS**

Summary

Attachments

3/12/2024 Minutes

HAYS COUNTY COMMISSIONERS COURT MINUTES

***** *****

MARCH 12, 2024

STATE OF TEXAS *
COUNTY OF HAYS *

ON THIS THE 12th DAY OF MARCH A.D., 2024, THE COMMISSIONERS COURT OF HAYS COUNTY, TEXAS, MET IN REGULAR MEETING. THE FOLLOWING MEMBERS WERE PRESENT, TO-WIT:

RUBEN BECERRA	COUNTY JUDGE	
DEBBIE GONZALES INGALSBE	COMMISSIONER, PCT. 1	
MICHELLE COHEN	COMMISSIONER, PCT. 2	
LON A. SHELL	COMMISSIONER, PCT. 3	
WALT SMITH	COMMISSIONER, PCT. 4	Via Teams
DILLON GERALD	DEPUTY COUNTY CLERK	

Clerk's Note: For complete transcript go to Hays County Website
https://hayscountytx.com/commissioners-court/court-video/
Transcript can be translated into any language through Google.com.

THE FOLLOWING PROCEEDINGS WERE HAD, THAT IS:

Judge Becerra called the meeting to order. Pastor Darius Todd, Hays County Chaplain, gave the invocation. Judge Becerra led the court in the Pledge of Allegiance to the United States and Texas flags.

PUBLIC COMMENTS

Dan Lyon made a public comment concerning county debt. Rodrigo Amaya made a public comment concerning possible election code violations.

40090 Adopt a Proclamation recognizing Hays County as a StormReady county.

Mike Jones, Director of Emergency Services, thanked the court and his staff. Paul Yura, National Weather Service Warning Coordination Meteorologist, spoke about the StormReady Program and the importance of weather preparedness.

A motion was made by Commissioner Shell, seconded by Commissioner Ingalsbe to adopt a Proclamation recognizing Hays County as a StormReady county.

AYE: Commissioner Ingalsbe, Commissioner Cohen, Commissioner Shell, Commissioner Smith, Judge Becerra

5 - 0 Passed - Unanimously

Recognition of the Hays County Auditor's Office and County Auditor Marisol Villarreal-Alonzo for receiving the Certificate of Achievement for Excellence in Financial Reporting and the Award of Financial Reporting Achievement from the Government Finance Officers Association (GFOA).

Marisol Villarreal-Alonzo, Hays County Auditor, recognized her staff for receiving the highest achievement for governmental accounting and financial reporting, and thanked the commissioners and district court judges for their support.

40091 Approve payments of County invoices.

A motion was made by Commissioner Ingalsbe, seconded by Commissioner Cohen to approve payments of County invoices.

AYE: Commissioner Ingalsbe, Commissioner Cohen, Commissioner Shell, Commissioner Smith, Judge Becerra

5 - 0 Passed - Unanimously

40092 Approve the payment of Juror checks.

A motion was made by Commissioner Ingalsbe, seconded by Commissioner Cohen to approve the payment of Juror checks.

AYE: Commissioner Ingalsbe, Commissioner Cohen, Commissioner Shell, Commissioner Smith, Judge Becerra

5 - 0 Passed - Unanimously

40093 Approve the payment of United Healthcare claims and authorize an additional disbursement in an amount not to exceed $550,000.00 to the healthcare claims account.

Daphne Tenorio, Hays County Treasurer, explained this will allow her to authorize payments for United Healthcare invoices that are over her bond amount of $500,000 during weeks when the Commissioners Court does not meet. Marisol Villarreal-Alonzo, Hays County Auditor, stated she has discussed this with the Civil Division of the District Attorney's Office and this will allow disbursements of up to $550,000 into the county's healthcare escrow account for United claims.

A motion was made by Commissioner Ingalsbe, seconded by Commissioner Cohen to approve the payment of United Healthcare claims and authorize an additional disbursement in an amount not to exceed $550,000.00 to the healthcare claims account.

AYE: Commissioner Ingalsbe, Commissioner Cohen, Commissioner Shell, Commissioner Smith, Judge Becerra

5 - 0 Passed - Unanimously

40094 Approve Commissioners Court Minutes of February 27, 2024.

A motion was made by Commissioner Ingalsbe, seconded by Commissioner Cohen to approve Commissioners Court Minutes of February 27, 2024.

AYE: Commissioner Ingalsbe, Commissioner Cohen, Commissioner Shell, Commissioner Smith, Judge Becerra

5 - 0 Passed - Unanimously

40095 Approve the payment of the March 15, 2024 payroll disbursements in an amount not to exceed $4,300,000.00 effective March 15, 2024 and post totals for wages, with-holdings, deductions, and benefits on the Hays County website once finalized.

A motion was made by Commissioner Ingalsbe, seconded by Commissioner Cohen to approve the payment of the March 15, 2024 payroll disbursements in an amount not to exceed $4,300,000.00 effective March 15, 2024 and post totals for wages, with-holdings, deductions, and benefits on the Hays County website once finalized.

AYE: Commissioner Ingalsbe, Commissioner Cohen, Commissioner Shell, Commissioner Smith, Judge Becerra

5 - 0 Passed - Unanimously

40096 Accept the 2023 Racial Profiling Report and the 2023 Annual Activity Report from the Hays County Constable's Office, Precinct 1.

A motion was made by Commissioner Ingalsbe, seconded by Commissioner Cohen to accept the 2023 Racial Profiling Report and the 2023 Annual Activity Report from the Hays County Constable's Office, Precinct 1.

AYE: Commissioner Ingalsbe, Commissioner Cohen, Commissioner Shell, Commissioner Smith, Judge Becerra

5 - 0 Passed - Unanimously

40097 Accept the 2023 Racial Profiling Report for the Hays County Sheriff's Office.

A motion was made by Commissioner Ingalsbe, seconded by Commissioner Cohen to accept the 2023 Racial Profiling Report for the Hays County Sheriff's Office.

AYE: Commissioner Ingalsbe, Commissioner Cohen, Commissioner Shell, Commissioner Smith, Judge Becerra

5 - 0 Passed - Unanimously

40098 Authorize Building Maintenance to purchase from Grainger one (1) KABA Push Button Lock for the Elections / IT Building in the amount of $669.77 and amend the budget accordingly.

A motion was made by Commissioner Ingalsbe, seconded by Commissioner Cohen to authorize Building Maintenance to purchase from Grainger one (1) KABA Push Button Lock for the Elections / IT Building in the amount of $669.77 and amend the budget accordingly.

AYE: Commissioner Ingalsbe, Commissioner Cohen, Commissioner Shell, Commissioner Smith, Judge Becerra

5 - 0 Passed - Unanimously

40099 Authorize payment to Hill Country Human Resources Management Association for five registrations on the same date to an Employment Law Conference in the amount of $139.00 each where no purchase order was issued as required per the Hays County Purchasing Policy.

A motion was made by Commissioner Ingalsbe, seconded by Commissioner Cohen to authorize payment to Hill Country Human Resources Management Association for five registrations on the same date to an Employment Law Conference in the amount of $139.00 each where no purchase order was issued as required per the Hays County Purchasing Policy.

AYE: Commissioner Ingalsbe, Commissioner Cohen, Commissioner Shell, Commissioner Smith, Judge Becerra

5 - 0 Passed - Unanimously

40100 Authorize the Commissioner Precinct 1 Office to support Rodriguez Elementary in the San Marcos Consolidated Independent School District (SMCISD) with activities for SMCISD students and staff.

A motion was made by Commissioner Ingalsbe, seconded by Commissioner Cohen to authorize the Commissioner Precinct 1 Office to support Rodriguez Elementary in the San Marcos Consolidated Independent School District (SMCISD) with activities for SMCISD students and staff.

AYE: Commissioner Ingalsbe, Commissioner Cohen, Commissioner Shell, Commissioner Smith, Judge Becerra

5 - 0 Passed - Unanimously

40101 Authorize the enrollment and requirement of all Hays County employees and elected officials who have access to a local government computer system or database to complete a cybersecurity training program certified by the Texas Department of Information Resources (DIR) at least annually.

A motion was made by Commissioner Ingalsbe, seconded by Commissioner Cohen to authorize the enrollment and requirement of all Hays County employees and elected officials who have access to a local government computer system or database to complete a cybersecurity training program certified by the Texas Department of Information Resources (DIR) at least annually.

AYE: Commissioner Ingalsbe, Commissioner Cohen, Commissioner Shell, Commissioner Smith, Judge Becerra

5 - 0 Passed - Unanimously

40102 Authorize the County Judge to execute the 2024 annual renewal agreement between Hays County Building Maintenance and Johnson Controls Inc., in the amount of $11,772.00 for the preventative maintenance and repairs of the County's remote access thermostat system.

A motion was made by Commissioner Ingalsbe, seconded by Commissioner Cohen to authorize the County Judge to execute the 2024 annual renewal agreement between Hays County Building Maintenance and Johnson Controls Inc., in the amount of $11,772.00 for the preventative maintenance and repairs of the County's remote access thermostat system.

AYE: Commissioner Ingalsbe, Commissioner Cohen, Commissioner Shell, Commissioner Smith, Judge Becerra

5 - 0 Passed - Unanimously

40103 Approve out-of-state travel for William Baumann GIS Specialist with the Office of Emergency Services to attend the Tyler Connect Conference and Advisory Board Meetings on May 19-24, 2024 in Indianapolis, Indiana.

A motion was made by Commissioner Ingalsbe, seconded by Commissioner Cohen to approve out-of-state travel for William Baumann GIS Specialist with the Office of Emergency Services to attend the Tyler Connect Conference and Advisory Board Meetings on May 19-24, 2024 in Indianapolis, Indiana.

AYE: Commissioner Ingalsbe, Commissioner Cohen, Commissioner Shell, Commissioner Smith, Judge Becerra

5 - 0 Passed - Unanimously

40104 Approve out-of-state travel for Leanne Cantalupo, GIS Analyst, and Killian Sterling, GIS Specialist, in the Development Services Department to attend the Environmental Systems Research Institute, Inc (ESRI) User Conference on July 15-19, 2024 in San Diego, CA.

A motion was made by Commissioner Ingalsbe, seconded by Commissioner Cohen to approve out-of-state travel for Leanne Cantalupo, GIS Analyst, and Killian Sterling, GIS Specialist, in the Development Services Department to attend the Environmental Systems Research Institute, Inc (ESRI) User Conference on July 15-19, 2024 in San Diego, CA.

AYE: Commissioner Ingalsbe, Commissioner Cohen, Commissioner Shell, Commissioner Smith, Judge Becerra

5 - 0 Passed - Unanimously

40105 Accept delivery of the Auditor's Office Quarterly Internal Examination Reports.

A motion was made by Commissioner Ingalsbe, seconded by Commissioner Cohen to accept delivery of the Auditor's Office Quarterly Internal Examination Reports.

AYE: Commissioner Ingalsbe, Commissioner Cohen, Commissioner Shell, Commissioner Smith, Judge Becerra

5 - 0 Passed - Unanimously

40106 Authorize the Office of Emergency Services to transfer funds to continuing education in the Fire Marshal Fee Code Fund and amend the budget accordingly.

A motion was made by Commissioner Ingalsbe, seconded by Commissioner Cohen to authorize the Office of Emergency Services to transfer funds to continuing education in the Fire Marshal Fee Code Fund and amend the budget accordingly.

AYE: Commissioner Ingalsbe, Commissioner Cohen, Commissioner Shell, Commissioner Smith, Judge Becerra

5 - 0 Passed - Unanimously

40107 Authorize the Office of Emergency Services Fire Marshal's Division to accept Law Enforcement Officer Standards and Education (LEOSE) funds in the amount of $1,437.18 distributed from the State Comptroller and amend the budget accordingly.

A motion was made by Commissioner Ingalsbe, seconded by Commissioner Cohen to authorize the Office of Emergency Services Fire Marshal's Division to accept Law Enforcement Officer Standards and Education (LEOSE) funds in the amount of $1,437.18 distributed from the State Comptroller and amend the budget accordingly.

AYE: Commissioner Ingalsbe, Commissioner Cohen, Commissioner Shell, Commissioner Smith, Judge Becerra

5 - 0 Passed - Unanimously

40108 Authorize the Hays County Juvenile Detention Center to purchase a subscription for the Doxy.me secure telemedicine software platform and amend the budget accordingly.

A motion was made by Commissioner Ingalsbe, seconded by Commissioner Cohen to authorize the Hays County Juvenile Detention Center to purchase a subscription for the Doxy.me secure telemedicine software platform and amend the budget accordingly.

AYE: Commissioner Ingalsbe, Commissioner Cohen, Commissioner Shell, Commissioner Smith, Judge Becerra

5 - 0 Passed - Unanimously

40109 Accept the company merger and name change of Jones & Carter, Inc. to Quiddity Engineering, LLC.

A motion was made by Commissioner Ingalsbe, seconded by Commissioner Cohen to accept the company merger and name change of Jones & Carter, Inc. to Quiddity Engineering, LLC.

AYE: Commissioner Ingalsbe, Commissioner Cohen, Commissioner Shell, Commissioner Smith, Judge Becerra

5 - 0 Passed - Unanimously

40110 Approve all 2024 events hosted by the San Marcos Main Street Program that may include commercial vendors.

Josie Falletta, City of San Marcos Downtown Manager, requested permission to have vendors on the courthouse lawn and thanked the court for their ongoing support. Judge Becerra asked for clarification on the types of vendors that will be operating. Falletta stated the majority are local and small businesses. Judge Becerra spoke about the importance of these events for economic development. Dan Lyon made a public comment concerning the impact of events on the recent renovations to the courthouse grounds. Judge Becerra explained the courthouse grounds maintenance is covered by Tax Increment Reinvestment Zone (TIRZ) funds and spoke in support of public use of the grounds.

A motion was made by Commissioner Ingalsbe, seconded by Commissioner Cohen to approve all 2024 events hosted by the San Marcos Main Street Program that may include commercial vendors.

AYE: Commissioner Ingalsbe, Commissioner Cohen, Commissioner Shell, Commissioner Smith, Judge Becerra

5 - 0 Passed - Unanimously

40111 Authorize the County Judge to execute a Sixth amendment to the Waste Connections Lone Star, Inc. Countywide Dumpster Contract pursuant to IFB 2021-B12, in relation to adding an additional haul to the Elections & IT Building located at 120 Stagecoach Drive, San Marcos at $18.05 per haul.

A motion was made by Commissioner Ingalsbe, seconded by Commissioner Cohen to authorize the County Judge to execute a Sixth amendment to the Waste Connections Lone Star, Inc. Countywide Dumpster Contract pursuant to IFB 2021-B12, in relation to adding an additional haul to the Elections & IT Building located at 120 Stagecoach Drive, San Marcos at $18.05 per haul.

AYE: Commissioner Ingalsbe, Commissioner Cohen, Commissioner Shell, Commissioner Smith, Judge Becerra

5 - 0 Passed - Unanimously

40112 Approve contract extension of contract Delinquent Fine and Fee Collection Services - Justice Court, District Court & County Court with McCreary Veselka Bragg & Allen P.C. Attorneys at Law (MVBA) for a period not to exceed 102 days (July 31, 2024).

Rodrigo Amaya made a public comment against the item and questioned its timeline. Stephanie Hunt, Hays County Purchasing Agent, stated the integrity of the purchasing process is her top priority and explained the contract timeline.

A motion was made by Commissioner Ingalsbe, seconded by Commissioner Cohen to approve contract extension of contract Delinquent Fine and Fee Collection Services - Justice Court, District Court & County Court with McCreary Veselka Bragg & Allen P.C. Attorneys at Law (MVBA) for a period not to exceed 102 days (July 31, 2024).

AYE: Commissioner Ingalsbe, Commissioner Cohen, Commissioner Shell, Commissioner Smith, Judge Becerra

5 - 0 Passed - Unanimously

40113 Approve contract Change Order No. 4, in the amount of $3,795.20 for Trimbuilt Construction, Inc. pursuant to IFB 2023-B13 IT-Elections Building Renovations and amend the budget accordingly.

A motion was made by Commissioner Ingalsbe, seconded by Commissioner Cohen to approve contract Change Order No. 4, in the amount of $3,795.20 for Trimbuilt Construction, Inc. pursuant to IFB 2023-B13 IT-Elections Building Renovations and amend the budget accordingly.

AYE: Commissioner Ingalsbe, Commissioner Cohen, Commissioner Shell, Commissioner Smith, Judge Becerra

5 - 0 Passed - Unanimously

40114 Authorize the County Judge to execute an Agreement between Hays County and The Bug Master for pest control services for additional buildings located at Uhland Road Complex, and authorize a waiver to the purchasing policy.

A motion was made by Commissioner Ingalsbe, seconded by Commissioner Cohen to authorize the County Judge to execute an Agreement between Hays County and The Bug Master for pest control services for additional buildings located at Uhland Road Complex, and authorize a waiver to the purchasing policy.

AYE: Commissioner Ingalsbe, Commissioner Cohen, Commissioner Shell, Commissioner Smith, Judge Becerra

5 - 0 Passed - Unanimously

40115 Authorize the execution of a Software Support Subscription with Southwest Solutions Group for ControLoc valued at $695.00 annually used by the Sheriff's Office for evidence lockers, and authorize a purchasing waiver to the Purchasing Policy.

A motion was made by Commissioner Ingalsbe, seconded by Commissioner Cohen to authorize the execution of a Software Support Subscription with Southwest Solutions Group for ControLoc valued at $695.00 annually used by the Sheriff's Office for evidence lockers, and authorize a purchasing waiver to the Purchasing Policy.

AYE: Commissioner Ingalsbe, Commissioner Cohen, Commissioner Shell, Commissioner Smith, Judge Becerra

5 - 0 Passed - Unanimously

40116 Authorize the Sheriff's Office to use Workplace Resource, LLC, doing business as Alfred Williams & Company, to assess office chairs valued at $498.75; authorize a discretionary exemption under Texas Local Government Code, Ch. 262.024(a)(7)(D).

A motion was made by Commissioner Ingalsbe, seconded by Commissioner Cohen to authorize the Sheriff's Office to use Workplace Resource, LLC, doing business as Alfred Williams & Company, to assess office chairs valued at $498.75; authorize a discretionary exemption under Texas Local Government Code, Ch. 262.024(a)(7)(D).

AYE: Commissioner Ingalsbe, Commissioner Cohen, Commissioner Shell, Commissioner Smith, Judge Becerra

5 - 0 Passed - Unanimously

40117 Authorize the acceptance of Amendment No 1 to the Department of State Health Services (DSHS), FY24 Immunizations/Locals grant contract in the amount of $192,341.00.

A motion was made by Commissioner Ingalsbe, seconded by Commissioner Cohen to authorize the acceptance of Amendment No 1 to the Department of State Health Services (DSHS), FY24 Immunizations/Locals grant contract in the amount of $192,341.00.

AYE: Commissioner Ingalsbe, Commissioner Cohen, Commissioner Shell, Commissioner Smith, Judge Becerra

5 - 0 Passed - Unanimously

40118 Approve specifications for RFP 2024-P09 Jail Based Competency Treatment Program and authorize Purchasing to solicit proposals and advertise.

Commissioner Smith thanked Commissioner Ingalsbe and the Behavioral Advisory Team for their work and stated this should have a positive impact on the District Attorney's Office (DA) and their ability to move cases through the system. Rodrigo Amaya made a public comment concerning the selection of the evaluation committee and the DA's appointee. Commissioner Ingalsbe explained that Jordan Powell, the First Assistant DA in the Civil Division, will select a staff member to serve on the committee, and the Commissioners Court will make the final decision when proposals are submitted. Stephanie Hunt, Hays County Purchasing Agent, reviewed the evaluation committee members. Commissioner Smith explained the Sheriff's Office has representatives on the committee because they run the jail's operations and are most familiar with the situation.

A motion was made by Commissioner Ingalsbe, seconded by Commissioner Cohen to approve specifications for RFP 2024-P09 Jail Based Competency Treatment Program and authorize Purchasing to solicit proposals and advertise.

AYE: Commissioner Ingalsbe, Commissioner Cohen, Commissioner Shell, Commissioner Smith, Judge Becerra

5 - 0 Passed - Unanimously

40119 Approve specifications for RFQ 2024-Q02 Professional Engineering Services and authorize Purchasing to solicit proposals and advertise.

A motion was made by Commissioner Ingalsbe, seconded by Commissioner Cohen to approve specifications for RFQ 2024-Q02 Professional Engineering Services and authorize Purchasing to solicit proposals and advertise.

AYE: Commissioner Ingalsbe, Commissioner Cohen, Commissioner Shell, Commissioner Smith, Judge Becerra

5 - 0 Passed - Unanimously

40120 Approve Utility Permits.

A motion was made by Commissioner Ingalsbe, seconded by Commissioner Cohen to approve Utility Permits.

AYE: Commissioner Ingalsbe, Commissioner Cohen, Commissioner Shell, Commissioner Smith, Judge Becerra

5 - 0 Passed - Unanimously

40121 Discussion and possible action to authorize the County Judge to execute Amendment No. 1 to the Interlocal Agreement between Hays County and the City of Buda relating to the RM 967 Maintenance project.

Commissioner Smith stated this is for the light installation at Robert S. Light Boulevard and RM 967.

A motion was made by Commissioner Smith, seconded by Commissioner Ingalsbe to authorize the County Judge to execute Amendment No. 1 to the Interlocal Agreement between Hays County and the City of Buda relating to the RM 967 Maintenance project.

AYE: Commissioner Ingalsbe, Commissioner Cohen, Commissioner Shell, Commissioner Smith, Judge Becerra

5 - 0 Passed - Unanimously

40122 Discussion and possible action to authorize the execution of Contract Amendment No. 3 in the amount of $10,000.00 to the Professional Services Agreement between Hays County and Kimley Horn & Associates, Inc. for the FM 2001 (Graef Road to Southeast of SH 21 + West of Graef Road to North of Satterwhite Road) project in precinct 1, as part of the 2016 Road Bond Program.

Commissioner Ingalsbe stated this is for utility coordination work. Judge Becerra spoke about future plans for the expansion of Highway 21.

A motion was made by Commissioner Ingalsbe, seconded by Commissioner Cohen to authorize the execution of Contract Amendment No. 3 in the amount of $10,000.00 to the Professional Services Agreement between Hays County and Kimley Horn & Associates, Inc. for the FM 2001 (Graef Road to Southeast of SH 21 + West of Graef Road to North of Satterwhite Road) project in precinct 1, as part of the 2016 Road Bond Program.

AYE: Commissioner Ingalsbe, Commissioner Cohen, Commissioner Shell, Commissioner Smith, Judge Becerra

5 - 0 Passed - Unanimously

40123 Discussion and possible action to authorize the execution of Contract Amendment No. 1 in the amount of $150,000.00 to the Professional Services Agreement between Hays County and Quiddity Engineering, LLC for the Centerpoint Road project in precinct 3, as part of the 2016 Road Bond Program and amend the budget accordingly.

Commissioner Shell explained this is for a possible railroad overpass on Centerpoint Road in San Marcos and spoke about strategies for obtaining funding and design plans.

A motion was made by Commissioner Shell, seconded by Commissioner Cohen to authorize the execution of Contract Amendment No. 1 in the amount of $150,000.00 to the Professional Services Agreement between Hays County and Quiddity Engineering, LLC for the Centerpoint Road project in precinct 3, as part of the 2016 Road Bond Program and amend the budget accordingly.

AYE: Commissioner Ingalsbe, Commissioner Cohen, Commissioner Shell, Commissioner Smith, Judge Becerra

5 - 0 Passed - Unanimously

40124 Discussion and possible action to authorize the County Judge to execute an Advance Funding Agreement Amendment #1 between Hays County and the Texas Department of Transportation relating to the Jacobs Well Road (CR 182) Improvement from 0.3 mile east of Mount Sharp Road to 0.61 miles east of Mount Sharp Road.

Commissioner Shell stated the Texas Department of Transportation is now fully covering what the county was going to contribute to building costs.

A motion was made by Commissioner Shell, seconded by Commissioner Cohen to authorize the County Judge to execute an Advance Funding Agreement Amendment #1 between Hays County and the Texas Department of Transportation relating to the Jacobs Well Road (CR 182) Improvement from 0.3 mile east of Mount Sharp Road to 0.61 miles east of Mount Sharp Road.

AYE: Commissioner Ingalsbe, Commissioner Cohen, Commissioner Shell, Commissioner Smith, Judge Becerra

5 - 0 Passed - Unanimously

40125 Discussion and possible action to approve the selection of LJA Engineering, Inc. to provide right-of-way acquisition services for the Old Stagecoach at Post Road Intersection project in Precinct 3; and authorize staff and counsel to negotiate a contract.

Commissioner Shell explained some safety improvements have been implemented at this intersection, and this selection would begin the process of working toward a more long-term solution.

A motion was made by Commissioner Shell, seconded by Commissioner Cohen to approve the selection of LJA Engineering, Inc. to provide right-of-way acquisition services for the Old Stagecoach at Post Road Intersection project in Precinct 3; and authorize staff and counsel to negotiate a contract.

AYE: Commissioner Ingalsbe, Commissioner Cohen, Commissioner Shell, Commissioner Smith, Judge Becerra

5 - 0 Passed - Unanimously

40126 Discussion and possible action to approve a resolution requesting County staff to initiate a process to identify a program of transportation projects for potential funding.

Commissioner Ingalsbe spoke about the need to identify transportation projects and funding. Judge Becerra gave support for the resolution and spoke about a possible future road bond and planning for growth. Commissioner Shell spoke about the previous 2016 road bond and the need for a higher level of planning in the future.

A motion was made by Commissioner Ingalsbe, seconded by Commissioner Shell to approve a resolution requesting County staff to initiate a process to identify a program of transportation projects for potential funding.

AYE: Commissioner Ingalsbe, Commissioner Cohen, Commissioner Shell, Commissioner Smith, Judge Becerra

5 - 0 Passed - Unanimously

40127 Hold a public hearing with possible action to establish a 3-way stop at the intersection of Crosswinds Parkway and Backstays Loop.

Judge Becerra opened the Public Hearing at 11:43 a.m. No comments were made. Judge Becerra closed the Public Hearing at 11:43 a.m. Commissioner Ingalsbe stated this will address residents' concerns over safety and mobility.

A motion was made by Commissioner Ingalsbe, seconded by Commissioner Shell to establish a 3-way stop at the intersection of Crosswinds Parkway and Backstays Loop.

AYE: Commissioner Ingalsbe, Commissioner Cohen, Commissioner Shell, Commissioner Smith, Judge Becerra

5 - 0 Passed - Unanimously

40128 Hold a public hearing with possible action to establish a 4-way stop at the intersection of Crosswinds Parkway and Bay Breeze Drive.

Judge Becerra opened the Public Hearing at 11:44 a.m. No comments were made. Judge Becerra closed the Public Hearing at 11:44 a.m.

A motion was made by Commissioner Ingalsbe, seconded by Commissioner Shell to establish a 4-way stop at the intersection of Crosswinds Parkway and Bay Breeze Drive.

AYE: Commissioner Ingalsbe, Commissioner Cohen, Commissioner Shell, Commissioner Smith, Judge Becerra

5 - 0 Passed - Unanimously

40129 Hold a public hearing with possible action to install 2 new stop signs on Dacy Lane at the intersection with McCormick Avenue.

Judge Becerra opened the Public Hearing at 11:44 a.m. No comments were made. Judge Becerra closed the Public Hearing at 11:44 a.m.

A motion was made by Commissioner Ingalsbe, seconded by Commissioner Shell to install 2 new stop signs on Dacy Lane at the intersection with McCormick Avenue.

AYE: Commissioner Ingalsbe, Commissioner Cohen, Commissioner Shell, Commissioner Smith, Judge Becerra

5 - 0 Passed - Unanimously

40130 Discussion and possible action to consider the release of the 2-year maintenance bond #PB03016800689 in the amount of $66,811.47 for Great Hills subdivision, Section 7.

A motion was made by Commissioner Ingalsbe, seconded by Commissioner Cohen to release the 2-year maintenance bond #PB03016800689 in the amount of $66,811.47 for Great Hills subdivision, Section 7.

AYE: Commissioner Ingalsbe, Commissioner Cohen, Commissioner Shell, Commissioner Smith, Judge Becerra

5 - 0 Passed - Unanimously

40131 Discussion and possible action to consider the release of the subdivision bond #41420699 in the amount of $1,028,339.75, and the acceptance of the roads into the County Road Maintenance System for Trails at Windy Hills Subdivision Phase 2.

A motion was made by Commissioner Ingalsbe, seconded by Commissioner Cohen to release the subdivision bond #41420699 in the amount of $1,028,339.75, and accept the roads into the County Road Maintenance System for Trails at Windy Hills Subdivision Phase 2.

AYE: Commissioner Ingalsbe, Commissioner Cohen, Commissioner Shell, Commissioner Smith, Judge Becerra

5 - 0 Passed - Unanimously

40132 Discussion and possible action to authorize the execution of the Hays County American Rescue Plan Recovery Donation Agreement between Hays County and Dripping Springs Independent School District and amend the budget accordingly.

Commissioner Smith spoke about the benefits of reunification program training and this agreement.

A motion was made by Commissioner Cohen, seconded by Commissioner Ingalsbe to authorize the execution of the Hays County American Rescue Plan Recovery Donation Agreement between Hays County and Dripping Springs Independent School District and amend the budget accordingly.

AYE: Commissioner Ingalsbe, Commissioner Cohen, Commissioner Shell, Commissioner Smith, Judge Becerra

5 - 0 Passed - Unanimously

40133 Discussion and possible action to authorize addition of general and law enforcement liability coverage on two newly purchased unmanned aircraft. Additional premium through November 15, 2024 of $1,817.00.

A motion was made by Commissioner Cohen, seconded by Commissioner Ingalsbe to authorize addition of general and law enforcement liability coverage on two newly purchased unmanned aircraft. Additional premium through November 15, 2024 of $1,817.00.

AYE: Commissioner Ingalsbe, Commissioner Cohen, Commissioner Shell, Commissioner Smith, Judge Becerra

5 - 0 Passed - Unanimously

40134 Discussion and possible action to authorize Celco Surveying to perform a follow-up boundary survey of the Sentinel Preserve for the amount of $3,600.00 pursuant to Texas Government Code Chapter 2254, Professional and Consulting Services.

Commissioner Shell stated the survey for this property needs to be updated.

A motion was made by Commissioner Shell, seconded by Commissioner Ingalsbe to authorize Celco Surveying to perform a follow-up boundary survey of the Sentinel Preserve for the amount of $3,600.00 pursuant to Texas Government Code Chapter 2254, Professional and Consulting Services.

AYE: Commissioner Ingalsbe, Commissioner Cohen, Commissioner Shell, Commissioner Smith, Judge Becerra

5 - 0 Passed - Unanimously

40135 Discussion and possible action to accept an updated Proposal from Water & Earth Technologies (WET) related to the replacement of the pressure transducer at Old Bastrop Hwy and Cottonwood Creek, authorize a discretionary exemption pursuant to Texas Local Government Code Ch. 262.024 (a)(7)(D), and amend the budget accordingly.

A motion was made by Commissioner Ingalsbe, seconded by Commissioner Cohen to accept an updated Proposal from Water & Earth Technologies (WET) related to the replacement of the pressure transducer at Old Bastrop Hwy and Cottonwood Creek, authorize a discretionary exemption pursuant to Texas Local Government Code Ch. 262.024 (a)(7)(D), and amend the budget accordingly.

AYE: Commissioner Ingalsbe, Commissioner Cohen, Commissioner Shell, Commissioner Smith, Judge Becerra

5 - 0 Passed - Unanimously

40136 Discussion and possible action to authorize the Treasurer's Office to re-grade the Treasury Specialist (0078-001) Grade 115 to Financial Analyst I Grade 120 step 2, effective 03/12/24.

Daphne Tenorio, Hays County Treasurer, explained her request to re-grade an employee that has extensive experience so that her job title and compensation reflects the actual work she does. This will have no impact on the budget due to savings from the step plan implementation. Shari Miller, Director of Human Resources, stated the majority of the Compensation Committee agrees with this re-grade. The court discussed with Tenorio and Miller the need for this re-grade, the employee's qualifications, and the upcoming budget process.

A motion was made by Judge Becerra, seconded by Commissioner Ingalsbe to authorize the Treasurer's Office to re-grade the Treasury Specialist (0078-001) Grade 115 to Financial Analyst I Grade 120 step 2, effective 03/12/24.

AYE: Commissioner Ingalsbe, Commissioner Cohen, Commissioner Shell, Commissioner Smith, Judge Becerra

5 - 0 Passed - Unanimously

40137 Discussion and possible action to ratify the execution of Memorandums of Understanding (MOU) with Texas Emergency Management Assistance Team; authorize expenditures related to the Smokehouse Creek Fire in Amarillo, Texas and amend the budget accordingly.

Mike Jones, Director of Emergency Services, explained this will allow the county to assist other jurisdictions in need during emergencies.

A motion was made by Commissioner Ingalsbe, seconded by Commissioner Cohen to ratify the execution of Memorandums of Understanding (MOU) with Texas Emergency Management Assistance Team; authorize expenditures related to the Smokehouse Creek Fire in Amarillo, Texas and amend the budget accordingly.

AYE: Commissioner Ingalsbe, Commissioner Cohen, Commissioner Shell, Commissioner Smith, Judge Becerra

5 - 0 Passed - Unanimously

40138 Discussion and possible action to authorize the County Judge to execute a Participation Agreement and Resolution with TexPool Investment Pools designating the District Clerk as an Authorized Representative for related trust accounts as authorized pursuant to Texas Local Government Code, Section 117.053.

Avrey Anderson, Hays County District Clerk, explained this would allow him to invest funds from accounts without social security numbers or with less-specified court-ordered terms. Marisol Villarreal-Alonzo, Hays County Auditor, noted this is audited annually to ensure all transactions are supported by a court order. Commissioner Smith stated he will support this item due to the Auditor's support. Daphne Tenorio, Hays County Treasurer, stated this is within the District Clerk's capacity under the State Constitution and gave support for the item.

A motion was made by Commissioner Ingalsbe, seconded by Commissioner Cohen to authorize the County Judge to execute a Participation Agreement and Resolution with TexPool Investment Pools designating the District Clerk as an Authorized Representative for related trust accounts as authorized pursuant to Texas Local Government Code, Section 117.053.

AYE: Commissioner Ingalsbe, Commissioner Cohen, Commissioner Shell, Commissioner Smith, Judge Becerra

5 - 0 Passed - Unanimously

40139 Discussion and possible action regarding supporting a resolution establishing an exemption from Hays County Ad Valorem taxation, for all or part of the appraised value of real property used to operate a qualifying and licensed Child-Care Facility, pursuant to Texas Senate Bill 1145.

Dan Lyon made a public comment against the item and welfare programs. Edward Bradley made a public comment in support of the item and spoke about the benefits of childhood education. Jacob Westjohn, Project Coordinator for Children at Risk, spoke in support of the item and of the benefits of tax relief for child care facilities. Commissioner Ingalsbe stated 8 facilities in Hays County would qualify for this and explained the terms of the exemption. Judge Becerra asked how this will benefit parents. Bradley explained this exemption would allow facilities to limit tuition increases and invest in their employees. Commissioner Shell stated he recognizes the value of child care but does not believe a property tax exemption is the right solution, and encouraged supporters to continue working toward a better solution at the state level. Commissioner Ingalsbe stated she supports this but also believes the state government should find another solution. Commissioner Smith spoke about child care needs in the county and other possible solutions that do not involve tax exemptions.

A motion was made by Commissioner Ingalsbe, seconded by Commissioner Cohen to adopt a resolution establishing an exemption from Hays County Ad Valorem taxation, for all or part of the appraised value of real property used to operate a qualifying and licensed Child-Care Facility, pursuant to Texas Senate Bill 1145.

AYE: Commissioner Ingalsbe, Commissioner Cohen, Commissioner Shell, Judge Becerra

NAY: Commissioner Smith

4 - 1 Passed

40140 Discussion and possible action to review and approve a preliminary Hays County budget calendar for Fiscal Year 2025.

Vickie Dorsett, Hays County Budget Officer, noted the court will need to meet on July 30, a date that was previously canceled.

A motion was made by Commissioner Ingalsbe, seconded by Commissioner Cohen to approve a preliminary Hays County budget calendar for Fiscal Year 2025.

AYE: Commissioner Ingalsbe, Commissioner Cohen, Commissioner Shell, Commissioner Smith, Judge Becerra

5 - 0 Passed - Unanimously

Discussion and possible action on establishing Hays County branding standards and guidelines.

Rodrigo Amaya made a public comment against the item. Commissioner Smith explained this was recommended by Human Resources due to Hays County not having standardized branding across all departments, and stated it would improve uniformity. Shari Miller, Director of Human Resources, stated this has been discussed internally for some time and would include not just business cards and letterheads, but also tone and communication style. Natalie Frels, Hays County Communications Manager, spoke about the importance of branding and stated she would like to form a committee to work on this. No action taken.

40141 Discussion and possible action to authorize the County Judge to execute an agreement between Hays County and NFP Corporate Services (TX), LLC for Employee Benefits Financial Consulting Services pursuant to RFP 2024-P07.

A motion was made by Commissioner Ingalsbe, seconded by Commissioner Cohen to authorize the County Judge to execute an agreement between Hays County and NFP Corporate Services (TX), LLC for Employee Benefits Financial Consulting Services pursuant to RFP 2024-P07.

AYE: Commissioner Ingalsbe, Commissioner Cohen, Commissioner Shell, Commissioner Smith, Judge Becerra

5 - 0 Passed - Unanimously

40142 Discussion and possible action to establish one new Community Outreach Specialist grade 116 for Commissioner Precinct 1 and Commissioner Precinct 2 utilizing ARPA Funding effective 3/12/24 and amend the budget accordingly.

Commissioner Ingalsbe stated this position had previously been established for Precinct 4. Commissioner Cohen noted this would be especially beneficial because her and Commissioner Ingalsbe work on numerous projects together. Commissioner Smith asked for this type of position and its benefits to be standardized going forward. Vickie Dorsett, Hays County Budget Officer, stated the Precinct 4 position is temporary with no benefits, but this proposed position is full-time with benefits. Commissioner Smith stated he will bring an item to a later court date to make the Precinct 4 position full-time as well.

A motion was made by Commissioner Cohen, seconded by Commissioner Ingalsbe to establish one new Community Outreach Specialist grade 116 for Commissioner Precinct 1 and Commissioner Precinct 2 utilizing ARPA Funding effective 3/12/24 and amend the budget accordingly.

AYE: Commissioner Ingalsbe, Commissioner Cohen, Commissioner Shell, Commissioner Smith, Judge Becerra

5 - 0 Passed - Unanimously

40143 Discussion and possible action to authorize the execution of a Professional Services Agreement between Hays County and Hays County Mental Health Deputy Mohammad Zaqzouq regarding additional K-9 services to the Hays County Sheriff's Office for purposes of mental health initiatives and additional, related, therapy options.

Chief Deputy Mike Davenport, Hays County Sheriff's Office, stated a deputy has trained his personal dog for K-9 services, which can be useful in situations involving mental health. The court gave support for the item.

A motion was made by Commissioner Ingalsbe, seconded by Commissioner Cohen to authorize the execution of a Professional Services Agreement between Hays County and Hays County Mental Health Deputy Mohammad Zaqzouq regarding additional K-9 services to the Hays County Sheriff's Office for purposes of mental health initiatives and additional, related, therapy options.

AYE: Commissioner Ingalsbe, Commissioner Cohen, Commissioner Shell, Commissioner Smith, Judge Becerra

5 - 0 Passed - Unanimously

40144 Discussion and possible action authorizing the execution of a License and Service Agreement with Callyo 2009 Corp. valued at $9,840.00 from the Sheriff Drug Forfeiture Funds; authorize a waiver to the purchasing policy and amend the budget accordingly.

Chief Deputy Mike Davenport, Hays County Sheriff's Office, explained this software has been used in the past and is the most efficient. Stephanie Hunt, Hays County Purchasing Agent, added that this software offers the most comprehensive services. Commissioner Smith stated he has also evaluated the software and this is the best option.

A motion was made by Commissioner Ingalsbe, seconded by Commissioner Cohen to authorize the execution of a License and Service Agreement with Callyo 2009 Corp. valued at $9,840.00 from the Sheriff Drug Forfeiture Funds; authorize a waiver to the purchasing policy and amend the budget accordingly.

AYE: Commissioner Ingalsbe, Commissioner Cohen, Commissioner Shell, Commissioner Smith, Judge Becerra

5 - 0 Passed - Unanimously

40145 Discussion and possible action to authorize the County Judge to execute Contract Amendment No. 2 with Deblin Health Concepts & Associates, LLC increasing the compensation cap from $25,000 to $45,000 related to mental health services for the County Court at Law Mental Health Speciality Court.

Kaimi Mattila, Mental Health Court Administrator, stated the Mental Health Court now accepts felony cases and has had an increase in referrals. Deblin Health Concepts & Associates LLC provides the highest level of case management care and the compensation cap increase is due to the increase in program participants.

A motion was made by Commissioner Ingalsbe, seconded by Commissioner Cohen to authorize the County Judge to execute Contract Amendment No. 2 with Deblin Health Concepts & Associates, LLC increasing the compensation cap from $25,000 to $45,000 related to mental health services for the County Court at Law Mental Health Speciality Court.

AYE: Commissioner Ingalsbe, Commissioner Cohen, Commissioner Shell, Commissioner Smith, Judge Becerra

5 - 0 Passed - Unanimously

40146 Discussion and possible action to authorize the County Judge to execute an Interlocal Agreement regarding the City of Kyle Tax Increment Reinvestment Zone (TIRZ) #6.

Tucker Furlow, Assistant Criminal District Attorney - Civil Division, reviewed the agreement's terms. Judge Becerra spoke about the purpose of a TIRZ and explained the county's contribution will not contribute to municipal functions. Commissioner Shell thanked all involved in this effort. Commissioner Smith clarified that the county will contribute 50% of the ad valorem real property taxes collected.

A motion was made by Commissioner Ingalsbe, seconded by Commissioner Cohen to authorize the County Judge to execute an Interlocal Agreement regarding the City of Kyle Tax Increment Reinvestment Zone (TIRZ) #6.

AYE: Commissioner Ingalsbe, Commissioner Cohen, Commissioner Shell, Commissioner Smith, Judge Becerra

5 - 0 Passed - Unanimously

40147 Discussion and possible action to appoint Commissioner Debbie Ingalsbe and Commissioner Michelle Cohen to the Board of Directors for the City of Kyle Tax Increment Reinvestment Zone (TIRZ) Number 6 for a two-year term.

A motion was made by Commissioner Cohen, seconded by Commissioner Ingalsbe to appoint Commissioner Debbie Ingalsbe and Commissioner Michelle Cohen to the Board of Directors for the City of Kyle Tax Increment Reinvestment Zone (TIRZ) Number 6 for a two-year term.

AYE: Commissioner Ingalsbe, Commissioner Cohen, Commissioner Shell, Commissioner Smith, Judge Becerra

5 - 0 Passed - Unanimously

Clerk's Note: Executive Session began at 11:49 a.m. and resumed back into open court at 12:57 p.m.

Clerk's Note: Commissioner Smith was not present for voting after Executive Session.

Executive Session pursuant to Sections 551.071 and 551.072 of the Texas Government Code: consultation with counsel and deliberation regarding the purchase, exchange, lease and/or value of real property associated with Parks and Open Space Projects being considered by Hays County. Possible discussion and/or action may follow in open court.

Those present for Executive Session were Commissioner Ingalsbe, Commissioner Cohen, Commissioner Shell, Judge Becerra, Tucker Furlow, Assistant Criminal District Attorney - Civil Division, Janice Jones, Legal Support Services Specialist, Vickie Dorsett, Hays County Budget Officer, Chase Young, Assistant Criminal District Attorney - Civil Division, and Shari Miller, Director of Human Resources. No action taken.

40148 Executive Session pursuant to sections 551.071(2) and 551.072 of the Texas Government Code (consultation with attorney and deliberation regarding County-owned Right of Way within the corporate limits of the City of Dripping Springs, Texas.

Those present in Executive Session were the Commissioners Court, Tucker Furlow, Assistant Criminal District Attorney - Civil Division, Janice Jones, Legal Support Services Specialist, Chase Young, Assistant Criminal District Attorney - Civil Division, Vickie Dorsett, Hays County Budget Officer, Marisol Villarreal-Alonzo, Hays County Auditor, and Shari Miller, Director of Human Resources.

A motion was made by Commissioner Shell, seconded by Commissioner Ingalsbe to authorize the County Judge to execute a Quit Claim Deed, conveying approximately 0.0569 acres of land from Hays County to the City of Dripping Springs, Texas, as presented in Executive Session; to authorize the D.A.'s Office - Civil Division to execute any and all documents incidental to closing; and to authorize filing the Quit Claim Deed in the Official Public Record of Hays County Texas.

AYE: Commissioner Ingalsbe, Commissioner Cohen, Commissioner Shell, Judge Becerra

4 - 0 Passed - Unanimously

Executive Session pursuant to Sections 551.071 and 551.074 of the Texas Government Code deliberation regarding employment and duties of all positions within the Office of Emergency Services. Possible discussion and/or action may follow in open court.

Those present in Executive Session were Commissioner Ingalsbe, Commissioner Cohen, Commissioner Shell, Judge Becerra, Tucker Furlow, Assistant Criminal District Attorney - Civil Division, Janice Jones, Legal Support Services Specialist, Vickie Dorsett, Hays County Budget Officer, Chase Young, Assistant Criminal District Attorney - Civil Division, Shari Miller, Director of Human Resources, Mike Jones, Director of Emergency Services, and Stephen Seddig. No action taken.

40149 Executive Session pursuant to Sections 551.071 and 551.072 of the Texas Government Code: consultation with counsel and deliberation regarding the purchase, exchange, lease and/or value of Right of Way located at or near Hillside Terrace in Pct. . Possible discussion and/or action may follow in open court.

Those present in Executive Session were the Commissioners Court, Tucker Furlow, Assistant Criminal District Attorney - Civil Division, Janice Jones, Legal Support Services Specialist, Chase Young, Assistant Criminal District Attorney - Civil Division, Vickie Dorsett, Hays County Budget Officer, Marisol Villarreal-Alonzo, Hays County Auditor, Shari Miller, Director of Human Resources, and David Baylor, LJA Director of Right of Way.

A motion was made by Commissioner Cohen, seconded by Commissioner Ingalsbe to accept landowner's revised counteroffer regarding Parcel 23 and 23E in relation to the Hillside Terrace right of way project in Precinct 2, as discussed in Executive Session.

AYE: Commissioner Ingalsbe, Commissioner Cohen, Commissioner Shell, Judge Becerra

4 - 0 Passed - Unanimously

A motion was made by Commissioner Cohen, seconded by Commissioner Ingalsbe to submit a counteroffer to landowners regarding Parcel 13, 13E1, and 13E2 in relation to the Hillside Terrace right of way project in Precinct 2, as discussed in Executive Session.

AYE: Commissioner Ingalsbe, Commissioner Cohen, Commissioner Shell, Judge Becerra

4 - 0 Passed - Unanimously

A motion was made by Commissioner Cohen, seconded by Commissioner Ingalsbe to approve a Mortgage Interest Differential Payment and a Replacement Housing Supplement Payment to the property owners of Parcel 8 and 8E in relation to the Hillside Terrace right of way project in Precinct 2, as discussed in Executive Session.

AYE: Commissioner Ingalsbe, Commissioner Cohen, Commissioner Shell, Judge Becerra

4 - 0 Passed - Unanimously

40150 Executive Session Pursuant to Sections 551.071 and 551.087 of the Texas Government Code: Consultation with counsel and deliberation regarding economic development negotiations associated with Project Journey, Project Forward Motion, and Project Huskey. Possible discussion and/or action may follow in open court.

Those present in Executive Session were Commissioner Ingalsbe, Commissioner Cohen, Commissioner Shell, Judge Becerra, Tucker Furlow, Assistant Criminal District Attorney - Civil Division, Janice Jones, Legal Support Services Specialist, Chase Young, Assistant Criminal District Attorney - Civil Division, Vickie Dorsett, Hays County Budget Officer, Marisol Villarreal-Alonzo, Hays County Auditor, Shari Miller, Director of Human Resources, Emily Mathes, Greater San Marcos Partnership Director of Business Development, and Jennifer Rogers, Greater San Marcos Partnership Manager of Business Retention & Expansion. Commissioner Shell stated this project, also known as the Buc-ee's Travel Center, was approved by the City of San Marcos in a similar Chapter 380 Agreement with the developer a couple of weeks ago. The project consists of almost 22 acres in Precinct 3 for construction and operation of a retail development consisting of approximately 74,000 square feet. The developer must create and maintain at least 175 full-time equivalent jobs in exchange for grant payments equaling 50% of the Sales Tax Revenues derived from the project. (If they do not maintain 175 FTEs, grant payments will be reduced, proportionately.) The developer also agrees to make a $50,000 contribution to the Hays County Community Fund, make an effort to hire qualified residents of Hays County, and make an effort to hire local contractors and suppliers in constructing the project. The project term is 15 years.

A motion was made by Commissioner Shell, seconded by Commissioner Ingalsbe to authorize the County Judge to execute a Chapter 381 Economic Development Incentives Agreement related to Project Journey, as presented in Executive Session.

AYE: Commissioner Ingalsbe, Commissioner Cohen, Commissioner Shell, Judge Becerra

4 - 0 Passed - Unanimously

Clerk's Note Agenda Item #M-1 RE: *Discussion and possible action related to the burn ban.* **- WAS PULLED.**

Discussion related to the Hays County inmate population, to include current population counts and costs.

Judge Becerra read the Sheriff's update of the inmate population. Current maximum jail capacity is 410 inmates. Jail Standards recommends holding 10% open, lowering current capacity to 368 inmates. The jail's daily average was 506 for the week of March 3, 2024, with a peak of 515 inmates on March 5, 2024. The estimated cost for outsourcing inmates this week was $160,491. The average number of outsourced males is 238 and females is 10. This week's inmates were housed in the following counties: Comal, Haskell, and Maverick.

Clerk's Note Agenda Item #M-3 RE: *Discussion of issues related to the Hays County Jail, and the planning of projects pertaining to the public safety facilities needs within the County. Possible action may follow.* **- WAS PULLED.**

Clerk's Note Agenda Item #M-4 RE: *Discussion and possible action regarding Hays County's use of federal or other grant funding related to COVID-19 response including but not limited to the American Rescue Plan Act (ARPA) and the Emergency Rental Assistance Program (ERAP).* **- WAS PULLED.**

Clerk's Note Agenda Item #M-5 RE: *Discussion and possible action related to proposed bills in the 87th Regular Session of the Texas Legislature and to consider adoption of resolution(s) regarding proposed bills. The Court may opt to withdraw to Executive Session during this item to consult with legal counsel pursuant to Texas Government Code 551.071.* **- WAS PULLED.**

Clerk's Note Agenda Item #M-6 RE: *Updates on measurable advancement of Judicial Services to include the areas of staffing, equipment, training, operations and policy, by Assistant Director of Judicial Services Albert Sierra.* **- WAS PULLED.**

ADJOURNMENT

A motion was made by Commissioner Shell, seconded by Judge Becerra to adjourn court at 1:00 p.m.

I, ELAINE H. CÁRDENAS, COUNTY CLERK and EXOFFICIO CLERK OF THE COMMISSIONERS COURT, do hereby certify that the foregoing contains a true and accurate record of the proceedings had by the Hays County Commissioners Court on MARCH 12, 2024.

COMMISSIONERS COURT HAYS COUNTY, TEXAS

Elaine H. Cárdenas

ELAINE H. CÁRDENAS, COUNTY CLERK AND EXOFFICIO
CLERK OF THE COMMISSIONERS COURT OF
HAYS COUNTY, TEXAS

Date	Res Number	Motion	Ingalsbe	Cohen	Shell	Smith	Becerra
3/12/2024	40090	Adopt a Proclamation recognizing Hays County as a StormReady county.	Y	Y	Y	Y	Y
3/12/2024	40091	Approve payments of County invoices.	Y	Y	Y	Y	Y
3/12/2024	40092	Approve the payment of Juror checks.	Y	Y	Y	Y	Y
3/12/2024	40093	Approve the payment of United Healthcare claims and authorize an additional disbursement in an amount not to exceed $550,000.00 to the healthcare claims account.	Y	Y	Y	Y	Y
3/12/2024	40094	Approve Commissioners Court Minutes of February 27, 2024.	Y	Y	Y	Y	Y
3/12/2024	40095	Approve the payment of the March 15, 2024 payroll disbursements in an amount not to exceed $4,300,000.00 effective March 15, 2024 and post totals for wages, with-holdings, deductions, and benefits on the Hays County website once finalized.	Y	Y	Y	Y	Y
3/12/2024	40096	Accept the 2023 Racial Profiling Report and the 2023 Annual Activity Report from the Hays County Constable's Office, Precinct 1.	Y	Y	Y	Y	Y
3/12/2024	40097	Accept the 2023 Racial Profiling Report for the Hays County Sheriff's Office.	Y	Y	Y	Y	Y
3/12/2024	40098	Authorize Building Maintenance to purchase from Grainger one (1) KABA Push Button Lock for the Elections / IT Building in the amount of $669.77 and amend the budget accordingly.	Y	Y	Y	Y	Y
3/12/2024	40099	Authorize payment to Hill Country Human Resources Management Association for five registrations on the same date to an Employment Law Conference in the amount of $139.00 each where no purchase order was issued as required per the Hays County Purchasing Policy.	Y	Y	Y	Y	Y
3/12/2024	40100	Authorize the Commissioner Precinct 1 Office to support Rodriguez Elementary in the San Marcos Consolidated Independent School District (SMCISD) with activities for SMCISD students and staff.	Y	Y	Y	Y	Y
3/12/2024	40101	Authorize the enrollment and requirement of all Hays County employees and elected officials who have access to a local government computer system or database to complete a cybersecurity training program certified by the Texas Department of Information Resources (DIR) at least annually.	Y	Y	Y	Y	Y
3/12/2024	40102	Authorize the County Judge to execute the 2024 annual renewal agreement between Hays County Building Maintenance and Johnson Controls Inc., in the amount of $11,772.00 for the preventative maintenance and repairs of the County's remote access thermostat system.	Y	Y	Y	Y	Y
3/12/2024	40103	Approve out-of-state travel for William Baumann GIS Specialist with the Office of Emergency Services to attend the Tyler Connect Conference and Advisory Board Meetings on May 19-24, 2024 in Indianapolis, Indiana.	Y	Y	Y	Y	Y
3/12/2024	40104	Approve out-of-state travel for Leanne Cantalupo, GIS Analyst, and Killian Sterling, GIS Specialist, in the Development Services Department to attend the Environmental Systems Research Institute, Inc (ESRI) User Conference on July 15-19, 2024 in San Diego, CA.	Y	Y	Y	Y	Y
3/12/2024	40105	Accept delivery of the Auditor's Office Quarterly Internal Examination Reports.	Y	Y	Y	Y	Y
3/12/2024	40106	Authorize the Office of Emergency Services to transfer funds to continuing education in the Fire Marshal Fee Code Fund and amend the budget accordingly.	Y	Y	Y	Y	Y
3/12/2024	40107	Authorize the Office of Emergency Services Fire Marshal's Division to accept Law Enforcement Officer Standards and Education (LEOSE) funds in the amount of $1,437.18 distributed from the State Comptroller and amend the budget accordingly.	Y	Y	Y	Y	Y
3/12/2024	40108	Authorize the Hays County Juvenile Detention Center to purchase a subscription for the Doxy.me secure telemedicine software platform and amend the budget accordingly.	Y	Y	Y	Y	Y
3/12/2024	40109	Accept the company merger and name change of Jones & Carter, Inc. to Quiddity Engineering, LLC.	Y	Y	Y	Y	Y
3/12/2024	40110	Approve all 2024 events hosted by the San Marcos Main Street Program that may include commercial vendors.	Y	Y	Y	Y	Y
3/12/2024	40111	Authorize the County Judge to execute a Sixth amendment to the Waste Connections Lone Star, Inc. Countywide Dumpster Contract pursuant to IFB 2021-B12, in relation to adding an additional haul to the Elections & IT Building located at 120 Stagecoach Drive, San Marcos at $18.05 per haul.	Y	Y	Y	Y	Y
3/12/2024	40112	Approve contract extension of contract Delinquent Fine and Fee Collection Services - Justice Court, District Court & County Court with McCreary Veselka Bragg & Allen P.C. Attorneys at Law (MVBA) for a period not to exceed 102 days (July 31, 2024).	Y	Y	Y	Y	Y
3/12/2024	40113	Approve contract Change Order No. 4, in the amount of $3,795.20 for Trimbuilt Construction, Inc. pursuant to IFB 2023-B13 IT-Elections Building Renovations and amend the budget accordingly.	Y	Y	Y	Y	Y
3/12/2024	40114	Authorize the County Judge to execute an Agreement between Hays County and The Bug Master for pest control services for additional buildings located at Uhland Road Complex, and authorize a waiver to the purchasing policy.	Y	Y	Y	Y	Y
3/12/2024	40115	Authorize the execution of a Software Support Subscription with Southwest Solutions Group for ControLoc valued at $695.00 annually used by the Sheriff's Office for evidence lockers, and authorize a purchasing waiver to the Purchasing Policy.	Y	Y	Y	Y	Y
3/12/2024	40116	Authorize the Sheriff's Office to use Workplace Resource, LLC, doing business as Alfred Williams & Company, to assess office chairs valued at $498.75; authorize a discretionary exemption under Texas Local Government Code, Ch. 262.024(a)(7)(D).	Y	Y	Y	Y	Y
3/12/2024	40117	Authorize the acceptance of Amendment No 1 to the Department of State Health Services (DSHS), FY24 Immunizations/Locals grant contract in the amount of $192,341.00.	Y	Y	Y	Y	Y
3/12/2024	40118	Approve specifications for RFP 2024-P09 Jail Based Competency Treatment Program and authorize Purchasing to solicit proposals and advertise.	Y	Y	Y	Y	Y
3/12/2024	40119	Approve specifications for RFQ 2024-Q02 Professional Engineering Services and authorize Purchasing to solicit proposals and advertise.	Y	Y	Y	Y	Y
3/12/2024	40120	Approve Utility Permits.	Y	Y	Y	Y	Y
3/12/2024	40121	Authorize the County Judge to execute Amendment No. 1 to the Interlocal Agreement between Hays County and the City of Buda relating to the RM 967 Maintenance project.	Y	Y	Y	Y	Y
3/12/2024	40122	Authorize the execution of Contract Amendment No. 3 in the amount of $10,000.00 to the Professional Services Agreement between Hays County and Kimley Horn & Associates, Inc. for the FM 2001 (Graef Road to Southeast of SH 21 + West of Graef Road to North of Satterwhite Road) project in precinct 1, as part of the 2016 Road Bond Program.	Y	Y	Y	Y	Y
3/12/2024	40123	Authorize the execution of Contract Amendment No. 1 in the amount of $150,000.00 to the Professional Services Agreement between Hays County and Quiddity Engineering, LLC for the Centerpoint Road project in precinct 3, as part of the 2016 Road Bond Program and amend the budget accordingly.	Y	Y	Y	Y	Y
3/12/2024	40124	Authorize the County Judge to execute an Advance Funding Agreement Amendment #1 between Hays County and the Texas Department of Transportation relating to the Jacobs Well Road (CR 182) Improvement from 0.3 mile east of Mount Sharp Road to 0.61 miles east of Mount Sharp Road.	Y	Y	Y	Y	Y
3/12/2024	40125	Approve the selection of LJA Engineering, Inc. to provide right-of-way acquisition services for the Old Stagecoach at Post Road Intersection project in Precinct 3; and authorize staff and counsel to negotiate a contract.	Y	Y	Y	Y	Y
3/12/2024	40126	Approve a resolution requesting County staff to initiate a process to identify a program of transportation projects for potential funding.	Y	Y	Y	Y	Y
3/12/2024	40127	Establish a 3-way stop at the intersection of Crosswinds Parkway and Backstays Loop.	Y	Y	Y	Y	Y
3/12/2024	40128	Establish a 4-way stop at the intersection of Crosswinds Parkway and Bay Breeze Drive.	Y	Y	Y	Y	Y
3/12/2024	40129	Install 2 new stop signs on Dacy Lane at the intersection with McCormick Avenue.	Y	Y	Y	Y	Y
3/12/2024	40130	Release the 2-year maintenance bond #PB03016800689 in the amount of $66,811.47 for Great Hills subdivision, Section 7.	Y	Y	Y	Y	Y
3/12/2024	40131	Release the subdivision bond #41420699 in the amount of $1,028,339.75, and accept the roads into the County Road Maintenance System for Trails at Windy Hills Subdivision Phase 2.	Y	Y	Y	Y	Y
3/12/2024	40132	Authorize the execution of the Hays County American Rescue Plan Recovery Donation Agreement between Hays County and Dripping Springs Independent School District and amend the budget accordingly.	Y	Y	Y	Y	Y
3/12/2024	40133	Authorize addition of general and law enforcement liability coverage on two newly purchased unmanned aircraft. Additional premium through November 15, 2024 of $1,817.00.	Y	Y	Y	Y	Y
3/12/2024	40134	Authorize Celco Surveying to perform a follow-up boundary survey of the Sentinel Preserve for the amount of $3,600.00 pursuant to Texas Government Code Chapter 2254, Professional and Consulting Services.	Y	Y	Y	Y	Y
3/12/2024	40135	Accept an updated Proposal from Water & Earth Technologies (WET) related to the replacement of the pressure transducer at Old Bastrop Hwy and Cottonwood Creek, authorize a discretionary exemption pursuant to Texas Local Government Code Ch. 262.024 (a)(7)(D), and amend the budget accordingly.	Y	Y	Y	Y	Y
3/12/2024	40136	Authorize the Treasurer's Office to re-grade the Treasury Specialist (0078-001) Grade 115 to Financial Analyst I Grade 120 step 2, effective 03/12/24.	Y	Y	Y	Y	Y
3/12/2024	40137	Ratify the execution of Memorandums of Understanding (MOU) with Texas Emergency Management Assistance Team; authorize expenditures related to the Smokehouse Creek Fire in Amarillo, Texas and amend the budget accordingly.	Y	Y	Y	Y	Y
3/12/2024	40138	Authorize the County Judge to execute a Participation Agreement and Resolution with TexPool Investment Pools designating the District Clerk as an Authorized Representative for related trust accounts as authorized pursuant to Texas Local Government Code, Section 117.053.	Y	Y	Y	Y	Y
3/12/2024	40139	Adopt a resolution establishing an exemption from Hays County Ad Valorem taxation, for all or part of the appraised value of real property used to operate a qualifying and licensed Child-Care Facility, pursuant to Texas Senate Bill 1145.	Y	Y	Y	NO	Y
3/12/2024	40140	Approve a preliminary Hays County budget calendar for Fiscal Year 2025.	Y	Y	Y	Y	Y
3/12/2024	40141	Authorize the County Judge to execute an agreement between Hays County and NFP Corporate Services (TX), LLC for Employee Benefits Financial Consulting Services pursuant to RFP 2024-P07.	Y	Y	Y	Y	Y
3/12/2024	40142	Establish one new Community Outreach Specialist grade 116 for Commissioner Precinct 1 and Commissioner Precinct 2 utilizing ARPA Funding effective 3/12/24 and amend the budget accordingly.	Y	Y	Y	Y	Y
3/12/2024	40143	Authorize the execution of a Professional Services Agreement between Hays County and Hays County Mental Health Deputy Mohammad Zaqzouq regarding additional K-9 services to the Hays County Sheriff's Office for purposes of mental health initiatives and additional, related, therapy options.	Y	Y	Y	Y	Y
3/12/2024	40144	Authorize the execution of a License and Service Agreement with Callyo 2009 Corp. valued at $9,840.00 from the Sheriff Drug Forfeiture Funds; authorize a waiver to the purchasing policy and amend the budget accordingly.	Y	Y	Y	Y	Y
3/12/2024	40145	Authorize the County Judge to execute Contract Amendment No. 2 with Deblin Health Concepts & Associates, LLC increasing the compensation cap from $25,000 to $45,000 related to mental health services for the County Court at Law Mental Health Speciality Court.	Y	Y	Y	Y	Y
3/12/2024	40146	Authorize the County Judge to execute an Interlocal Agreement regarding the City of Kyle Tax Increment Reinvestment Zone (TIRZ) #6.	Y	Y	Y	Y	Y
3/12/2024	40147	Appoint Commissioner Debbie Ingalsbe and Commissioner Michelle Cohen to the Board of Directors for the City of Kyle Tax Increment Reinvestment Zone (TIRZ) Number 6 for a two-year term.	Y	Y	Y	Y	Y
3/12/2024	40148	Authorize the County Judge to execute a Quit Claim Deed, conveying approximately 0.0569 acres of land from Hays County to the City of Dripping Springs, Texas, as presented in Executive Session; to authorize the D.A.'s Office - Civil Division to execute any and all documents incidental to closing; and to authorize filing the Quit Claim Deed in the Official Public Record of Hays County Texas.	Y	Y	Y	ABSENT	Y
3/12/2024	40149	Accept landowner's revised counteroffer regarding Parcel 23 and 23E in relation to the Hillside Terrace right of way project in Precinct 2, as discussed in Executive Session. Submit a counteroffer to landowners regarding Parcel 13, 13E1, and 13E2 in relation to the Hillside Terrace right of way project in Precinct 2, as discussed in Executive Session. Approve a Mortgage Interest Differential Payment and a Replacement Housing Supplement Payment to the property owners of Parcel 8 and 8E in relation to the Hillside Terrace right of way project in Precinct 2, as discussed in Executive Session.	Y	Y	Y	ABSENT	Y
3/12/2024	40150	Authorize the County Judge to execute a Chapter 381 Economic Development Incentives Agreement related to Project Journey, as presented in Executive Session.	Y	Y	Y	ABSENT	Y

AGENDA ITEM REQUEST FORM: G. 6.

Hays County Commissioners Court

Date: 03/26/2024

Requested By: David Peterson, Constable Pct 1

Sponsor: Commissioner Ingalsbe

Agenda Item

Approve and confirm the appointment of Clark Flynn as a regular full-time Deputy Constable in the Hays County Constable's Precinct 1 Office. **INGALSBE/PETERSON**

Summary

Pursuant to Local Government Code Chapter 86 Subchapter B 86.011 (a) The Commissioner's Court shall approve and confirm the appointment of a Deputy Constable.

Sec. 86.011. APPOINTMENT OF DEPUTY CONSTABLE.
(a) An elected constable who desires to appoint a deputy must apply in writing to the commissioner's court of the county and show that it is necessary to appoint a deputy in order to properly handle the business of the constable's office that originates in the constable's precinct. The application must state the name of the proposed deputy. The commissioners court shall approve and confirm the appointment of the deputy only if the commissioners court determines that the constable needs a deputy to handle the business originating in the precinct.
(b) Each deputy constable must qualify in the manner provided for deputy sheriffs.
(c) The constable is responsible for the official acts of each deputy of the constable. The constable may require a deputy to post a bond or surety. A constable may exercise any remedy against a deputy or the deputy's surety that a person may exercise against the constable or the constable's surety.
(d) A person commits an offense if the person:
  (1) serves as a deputy constable and the person has not been appointed as provided by Subsection (a); or
  (2) is a constable and issues a deputyship without the consent and approval of the commissioner's court.
(e) An offense under Subsection (d) is punishable by a fine of not less than $50 or more than $1,000

Deputy Clark Flynn is filling a new position in the Constable office, Precinct 1.

Attachments

Bio -Clark Flynn

Clark Flynn –

Clark Flynn is from New Braunfels, Texas. Clark is currently engaged to his fiancé Kaitlyn Kennis who are proud parents of a Great Dane named Oakley and two doxies.
Clark graduated from Austin Community College in December 2015. He started his Law Enforcement career with the Florence Police Department as a reserve. He then moved on to Texas State University Police Department in September 2018 and made Sergeant in June 2023. Clark also served ten years in the U.S. Army.

Clark has over 2660 hours with Texas Commission on Law Enforcement

Training Licenses/Certification:
Basic Instructor Certification
Advance Peace Officer
Certified Field Training Officer
ALERRT-Erase Train the Trainer Instructor

We welcome Clark Flynn to Constables Office as a Deputy Constable.

AGENDA ITEM REQUEST FORM: G. 7.

Hays County Commissioners Court

Date: 03/26/2024

Requested By: Michael Torres, Constable Pct 2

Sponsor: Commissioner Cohen

Agenda Item

Approve and confirm the appointment of Travis Talbot as a regular full-time Deputy Constable in the Hays County Constable Precinct 2 Office. **COHEN/TORRES**

Summary

Pursuant to Local Government Code Chapter 86, Subchapter B 86.011 (a) The Commissioner's Court shall approve and confirm the appointment of a Deputy Constable.

Sec. 86.011. APPOINTMENT OF DEPUTY CONSTABLE.
(a) An elected constable who desires to appoint a deputy must apply in writing to the commissioners court of the county and show that it is necessary to appoint a deputy in order to properly handle the business of the constable's office that originates in the constable's precinct. The application must state the name of the proposed deputy. The commissioners court shall approve and confirm the appointment of the deputy only if the commissioners court determines that the constable needs a deputy to handle the business originating in the precinct.
(b) Each deputy constable must qualify in the manner provided for deputy sheriffs.
(c) The constable is responsible for the official acts of each deputy of the constable. The constable may require a deputy to post a bond or security. A constable may exercise any remedy against a deputy or the deputy's surety that a person may exercise against the constable or the constable's surety.(d) A person commits an offense if the person:
(1) serves as a deputy constable and the person has not been appointed as provided by Subsection (a); or
(2) is a constable and issues a deputyship without the consent and approval of the commissioners court.
(e) An offense under Subsection (d) is punishable by a fine of not less than $50 or more than $1,000.Deputy Constable Travis Talbot will fill the budgetary approved position in the Constable, Pct. 2 Office.

AGENDA ITEM REQUEST FORM: G. 8.

Hays County Commissioners Court

Date: 03/26/2024

Requested By:

Sponsor: Judge Becerra

Agenda Item

Approve the Hispanic Heritage Exhibition Walk Celebration event on the courthouse grounds sponsored by Centro Cultural Hispano de San Marcos and LULAC Council #654 to be held on September 14, 2024, that shall include commercial vendors. **BECERRA**

Summary

Section E.12 of the Property Use Policy states that "commercial soliciting, vending, and displaying or distributing commercial advertising on Property is prohibited, except when in conjunction with an event approved by Commissioner's Court." Centro Cultural Hispano de San Marcos has had their events on the courthouse grounds for the last 2 years and would like permission to once again bring on commercial vendors.

AGENDA ITEM REQUEST FORM: G. 9.

Hays County Commissioners Court

Date: 03/26/2024

Requested By: Shell

Sponsor: Commissioner Shell

Agenda Item

Approve the appointment of Joseph Malone to the Board of Commissioners for Hays County Emergency Services District #4 for a term ending December 31, 2025 to fill the vacancy created by the resignation of Chuck Ware. **SHELL**

Summary

Chuck Ware wishes to resign from ESD 4. Mr. Ware was recently reappointed for a term ending 12/31/25, his service is greatly appreciated.

Joseph Malone will serve the remainder of the term. Mr. Malone has a Juris Doctor degree from Loyola University of Chicago and has served on the WImberley ISD Board. He is currently an attorney with Stevens & Malone, PLLC.

AGENDA ITEM REQUEST FORM: G. 10.

Hays County Commissioners Court

Date: 03/26/2024

Requested By: Shell

Sponsor: Commissioner Shell

Agenda Item

Approve the appointment of Manuel Grafia to the Board of Commissioners for Hays County Emergency Services District #4 for a term ending December 31, 2024 to fill the vacancy created by the resignation of Ron Spangenberg. **SHELL**

Summary

Ron Spangenberg wishes to resign from ESD 4. Mr. Spangenberg has served ESD 4 for many years, his service is greatly appreciated.

Manual Grafia holds multiple degrees, has served in the U.S. Army and as a law enforcement officer.

AGENDA ITEM REQUEST FORM: G. 11.

Hays County Commissioners Court

Date: 03/26/2024

Requested By: T. CRUMLEY

Sponsor: Commissioner Ingalsbe

Co-Sponsor: Commissioner Cohen

Agenda Item:

Authorize the County Judge to execute an agreement with Core Office Interiors for the purchase and installation of furniture for the Health Department lobby in the amount of $6,308.33 and amend the budget accordingly.
INGALSBE/COHEN/T.CRUMLEY

Summary:

The Director of the Hays County Health Department is requesting to purchase furniture for the lobby. The lobby is currently being furnished with chairs borrowed from Building Maintenance. The Health Department has secured a quote from Core Office Interiors under BuyBoard Contract #667-22 for the furniture and installation. The furniture will include one (1) two-seat bench, nine (9) armchairs, and three (3) corner tables. ARPA funds have been identified for this purchase.

Fiscal Impact:

Amount Requested: $6,308.33
Line Item Number: 011-763-99-187.5211/.5711_400

Budget Office:

Source of Funds:American Rescue Plan Act (ARPA) Fund
Budget Amendment Required Y/N?: Yes
Comments: Move funds to appropriate line items for furniture purchase.
$1,784.63 - Increase Office Equipment_Operating (bench/labor) 011-763-99-187.5711_400
$4,523.70 - Increase Office Supplies (chairs/tables/labor) 011-763-99-187.5211
($6,308.33) - Decrease Miscellaneous 011-763-99-187.5391

Purchasing Office:

Purchasing Guidelines Followed Y/N?: Yes
Comments: Buyboard Contract 667-22

Auditor's Office

G/L Account Validated Y/N?: Yes
New Revenue Y/N?: N/A
Comments:

Attachments

CORE Office Interiors Proposal

CORE | office interiors

Remit To Info:
PO Box 80768
Austin, TX 78708
ACH R&T: 111300958
ACH Account: 37015168

Contact Accounts Receivable at ar@coreoi.com

Quote

CORE Office Interiors - Houston
7108 Old Katy Rd Ste 150
Houston, TX 77024-2153
Phone: 713.803.0100
Email: orders-austin@coreoi.com
https://www.coreoi.com/

Order Number	13963
Date	03/22/2024
Proposal Valid Through	04/21/2024
Customer PO No	
Customer Name	Hays County
Salesperson	Jaclyn Sloan
Project Number	
Terms	NET 15
Page	1 of 4

TO
Hays County
1307 Uhland Rd
San Marcos, TX 78666

ATTN: Kimberli Andrews
Email: kimberli.andrews@co.hays.tx.us

SHIP TO
Hays County
101 Thermon Drive
San Marcos, TX 78666

ATTN: Matthew Gonzales
Phone: 512-393-5535
Email: matthew.gonzales@co.hays.tx.us

Prepared for : Jaclyn Sloan

BuyBoard Contract #667-22

Line	Quantity	Description	List	Unit Price	Extended Amount
1	1.00 Each	HON INDUSTRIES HASB2--$(5)-.SMOMVGD-49-.PM-P8X ASTIR TWO SEAT BENCH $(5):Grade 5 Uph .SMOMVGD:Vanguard CV 49:Calico .PM:Post Metal P8X:Solar Black Tag: LOBBY_OPT 1 % Off List: 49.33	3,309.00	1,676.56	1,676.56
2	9.00 Each	HON INDUSTRIES HIGCL--.E-.U-$(5)-.SMOMVGD-49-.T IGNITION GUEST CHAIR FOUR LEG FRAME ARMS .E:Glide .U:Upholstered $(5):Grade 5 Uph .SMOMVGD:Vanguard CV 49:Calico .T:Black Tag: LOBBY_OPT 1 % Off List: 53.60	815.00	378.16	3,403.44
3	3.00 Each	HON INDUSTRIES H80192--$(L1STD)-.LSA1-P Occasional Laminate Occasional Corner Table 24L 24W 20H $(L1STD):Grd L1 Standard Laminates .LSA1:Sterling Ash P:Black Tag: LOBBY_OPT 1 % Off List: 53.60	608.00	282.11	846.33
4	1.00 Each	CORE Office Interiors - SERVICES	0.00	382.00	382.00

CORE | office interiors

Remit To Info:
PO Box 80768
Austin, TX 78708
ACH R&T: 111300958
ACH Account: 37015168

Contact Accounts Receivable at ar@coreoi.com

Quote

CORE Office Interiors - Houston
7108 Old Katy Rd Ste 150
Houston, TX 77024-2153
Phone: 713.803.0100
Email: orders-austin@coreoi.com
https://www.coreoi.com/

Order Number	13963
Date	03/22/2024
Proposal Valid Through	04/21/2024
Customer PO No	
Customer Name	Hays County
Salesperson	Jaclyn Sloan
Project Number	
Terms	NET 15
Page	2 of 4

		LABOR Our standard* installation includes the receiving, inspection, delivery and proper installation of product provided by CORE Office Interiors. This process is supervised by an on-site COREoi lead employee and includes direct support from COREoi and its partners. The following services are included as part of your furniture order: Receive/Deliver/Install during normal business hours: LOBBY: 10 lobby guest armchairs and 3 small end tables 2 installers - 2.55 hours per man % Off List: 0.00			

Order Sub-Total :	$6,308.33
TOTAL ORDER :	**$6,308.33**

PLEASE REVIEW THIS QUOTATION AND NOTIFY US PROMPTLY OF ANY CORRECTIONS REQUIRED

THANK YOU FOR THE OPPORTUNITY TO BE OF SERVICE

CORE | office interiors

Remit To Info:
PO Box 80768
Austin, TX 78708
ACH R&T: 111300958
ACH Account: 37015168

Contact Accounts Receivable at ar@coreoi.com

Quote

CORE Office Interiors - Houston
7108 Old Katy Rd Ste 150
Houston, TX 77024-2153
Phone: 713.803.0100
Email: orders-austin@coreoi.com
https://www.coreoi.com/

Order Number	13963
Date	03/22/2024
Proposal Valid Through	04/21/2024
Customer PO No	
Customer Name	Hays County
Salesperson	Jaclyn Sloan
Project Number	
Terms	NET 15
Page	3 of 4

CORE Office Interiors Terms & Conditions

We have provided you with this quote based on our knowledge of your current requirements and project goals. Taxes, shipping, handling, and other fees may apply. We reserve the right to cancel quotes arising from pricing or other errors.

1. It is understood that this is a custom-built furniture order. For this reason, upon order placement and acceptance by the relevant manufacturer, COREoi cannot cancel orders following order placement. We will do our best to honor a request in change, cancellation, or return. The customer remains liable for all changes outlined in this proposal unless approved and in writing. The customer may incur restocking, cancellation and/or change order changes.
2. Warranty: Your complete satisfaction and future business is our goal. We take pride in the quality of the products we represent. All applicable manufacturer warranties will be available upon request.
3. Shipment/Freight: We will not be liable for any delay or damages claimed to result from shipping or freight carrier. If the buyer requests to change or postpone delivery beyond the shipping date when we are ready to make delivery, we may store or transfer the goods to our warehouse and/or third-party warehouse at the customer's expense. Upon notification to the buyer of transfer to storage, the goods shall be deemed delivered to the customer for all intents and purposes, including invoicing and payment.
4. Unless expressly noted in this proposal, COREoi will provide all installation and delivery services during normal working hours, 8am to 5pm, Monday through Friday. If services are requested other than normal business hours, additional charges may be assessed. COREoi will issue a Change Order for work that falls outside the reasonably agreed-upon scope of this quote, and your approval/signature will be required to initiate the additional work.
5. Pay Terms:
   a. Any orders under $2,500.00 require a 100% pre-payment before COREoi can place the order.
   b. For Drop-Shipped products over $2,500.00, a 50% deposit is required before the order is placed and will invoice the remaining amount when the product is shipped to you.
   c. For orders over $2,500, we require a 50% deposit before we place the order of your products. The remaining 50% of the order minus the labor/installation charge, will be invoiced when we have received the majority of the product (75% is considered majority). Labor/Installation will be invoiced when the project is complete.
   d. Special Pay Terms - Progress Billing/Pay Applications: Progress Billing will be agreed upon between customer and COREoi. The customer PO/Project Contract will contain these details and COREoi will invoice according to the agreement. All invoices are due according to the payment terms listed on the invoice.
6. A 1.5% per month interest charge will be added to unpaid accounts beyond the invoice due date. Delinquent customers will be liable for reasonable collection costs, including attorney fees. COREoi reserves the right to lean the property if invoices are not paid.
7. Contingency Fee: A small percentage of the total sell price line item, added for use in the event of unexpected circumstances that could lead to an increase in cost. COREoi adds this line to all quotes for acceptance of risk, unexpected manufacturer price increases, change in original scope, or if unforeseen additional product needs to be added to order. Customers may also allocate this fee to a reserve for subsequent use and distribution if unexpected events occur. The contingency fee can only be allocated/used on the respective quote.
8. All CORE Office Interiors quotes expire 30 days after submission. After 30 days, COREoi will need to check for updated pricing to account for supplier and vendor price adjustments.

Signature: _____

Name: _____

Title: _____

CORE | office interiors

Remit To Info:
PO Box 80768
Austin, TX 78708
ACH R&T: 111300958
ACH Account: 37015168

Contact Accounts Receivable at ar@coreoi.com

Quote

CORE Office Interiors - Houston
7108 Old Katy Rd Ste 150
Houston, TX 77024-2153
Phone: 713.803.0100
Email: orders-austin@coreoi.com
https://www.coreoi.com/

Order Number	13963
Date	03/22/2024
Proposal Valid Through	04/21/2024
Customer PO No	
Customer Name	Hays County
Salesperson	Jaclyn Sloan
Project Number	
Terms	NET 15
Page	4 of 4

Date: _____

AGENDA ITEM REQUEST FORM: G. 12.

Hays County Commissioners Court

Date: 03/26/2024

Requested By: T.CRUMLEY

Sponsor: Judge Becerra

Agenda Item

Ratify the submission of a grant application to the Office of The Governor, State Crisis Grant Program in the amount of $531,547.00 related to fentanyl overdoses. **BECERRA/T.CRUMLEY**

Summary

This proposal seeks grant funding to assemble a team that addresses fentanyl overdoses in Hays, Travis, and Williamson Counties. The funding will assist in hiring additional staff to investigate overdose cases, provide training, equipment, and other support to the team. The proposal includes funds for salaries and benefits for investigators, a crime analyst, and an administrative assistant, as well as covering costs such as overtime, equipment, and travel. Once the application is assigned to a Grant Manager from the Office of The Governor, the Hays County Grants Department will work with the Grant Manager on any budgetary adjustments that need to be made.

Attachments

Application

9:14 AM

Agency Name: Hays County **Grant/App:** 5086001 **Start Date:** 10/1/2024
Project Title: Fentanyl Overdose Response Team **Status:** Pending OOG Review **End Date:** 10/31/2025 **Fund Source:** CI-Byrne State Crisis Intervention Program
Current Program Manager: **Liquidation Date:**
Original Award: $0.00
Current Budget: $531,547.00 **Current Award:** $0.00 **CFDA:** 16.738 **OOG Solicitation:** FY2025 State Crisis Intervention Grant Program Announcement

Printer Friendly

General Information and Instructions

View Introduction

View How Do I Assign a New Contact?

View List of Permissions By Role

View Messages to OOG

Identifying Information

Applicant Agency Name:
Hays County

Project Title:
Fentanyl Overdose Response Team

Division or Unit to Administer the Project:
Sheriff's Office

Agency Address Line 1:

812 S. Stagecoach Trail

Agency Address Line 2:

City: San Marcos

State: Texas

Zip Code: 78666-8093

Start Date: 10/1/2024

End Date: 10/31/2025

Plan Year: 2025

Target Area Information

Select Your Project's Geographic Impact:

Local Regional Statewide

Select Your Primary Service County:

The county in which the majority of services will be provided, or select **Impact is Statewide**: Hays

Your project will provide services within:

Hays

Select all of the counties within the project's service area:

Click to View County List

View the list of counties you selected that are within the project's service area:

Bexar,Travis

Grant Officials Information

Authorized Official Email Address:

judge.becerra@co.hays.tx.us

Title:
The Honorable

Last Name:
Becerra

First Name:
Ruben

Business Phone:
512-393-2205

Fax Number:

Position:
County Judge

Salutation:
Judge

Address Line 1:
111 E San Antonio St

Address Line 2:

City:
San Marcos

State:
Texas

Zip Code:
78666

Financial Officer Email Address:

marisol.alonzo@co.hays.tx.us

Title:
Ms.

Last Name:
Alonzo

First Name:
Marisol

Business Phone:
512-393-2283

Fax Number:
512-393-2248

Position:
County Auditor

Salutation:
Ms.

Address Line 1:
712 S. Stagecoach Trl., Ste. 1071

Address Line 2:

City:
San Marcos

State:
Texas

Zip Code:
78666

Project Director Email Address:

ashton.pecina@co.hays.tx.us

Title:
Mr.

Last Name:
Pecina

First Name:
Ashton

Business Phone:
512-393-2209

Fax Number:

Position:
Grant Writer

Salutation:
Mr.

Address Line 1:
715 S. Stagecoach Trail

Address Line 2:
5123932209

City:
San Marcos

State:
Texas

Zip Code:
78666

Grant Writer Email Address:

simone.corprew@co.hays.tx.us

Title:
Ms.

Last Name:
Corprew

First Name:
Simone

Business Phone:
512-749-1161

Fax Number:

Position:
Grant Writer

Salutation:
Ms.

Address Line 1:
712 S Stagecoach Trail

Address Line 2:

City:
San Marcos

State:
Texas

Zip Code:
78666

Note from Grantee to OOG

Save Note from Grantee to OOG

Printer Friendly

Previous Save and Continue

9:10 AM

Agency Name: Hays County **Grant/App:** 5086001 **Start Date:** 10/1/2024
Project Title: Fentanyl Overdose Response Team **Status:** Pending OOG Review **End Date:** 10/31/2025 **Fund Source:** CI-Byrne State Crisis Intervention Program
Current Program Manager: **Liquidation Date:**
Original Award: $0.00
Current Budget: $531,547.00 **Current Award:** $0.00 **CFDA:** 16.738 **OOG Solicitation:** FY2025 State Crisis Intervention Grant Program Announcement

Printer Friendly

General Information and Instructions

View Introduction

Fund Source Information and Requirements

Introduction

The purpose of this funding is to support projects that promote the prevention, intervention, and reduction of crime and violence and provide essential crisis services to at-risk populations within Texas communities.

Certifications

In addition to the requirements found in existing statute, regulation, and the funding announcement, this program requires applicant organizations to certify compliance with the following:

Constitutional Compliance
Applicant assures that it will not engage in any activity that violates Constitutional law including profiling based upon race.

Information Systems
Applicant assures that any new criminal justice information systems will comply with data sharing standards for the Global Justice XML Data Model and the National Information Exchange Model.

Cybersecurity Training Requirement
Local units of governments must comply with the Cybersecurity Training requirements described in Section 772.012 and Section 2054.5191 of the Texas Government Code. Local governments determined to not be in compliance with the cybersecurity requirements required by Section 2054.5191 of the Texas Government Code are ineligible for OOG grant funds until the second anniversary of the date the local government is determined ineligible. Government entities must annually certify their compliance with the training requirements using the Cybersecurity Training Certification for State and Local Governments. A copy of the Training Certification must be uploaded to your eGrants application. For more information or to access available training programs, visit the Texas Department of Information Resources Statewide Cybersecurity Awareness Training page.

Criminal History Reporting
Entities receiving funds from PSO must be located in a county that has an average of 90% or above on both adult and juvenile dispositions entered into the computerized criminal history database maintained by the Texas Department of Public Safety (DPS) as directed in the Texas Code of Criminal Procedure, Chapter 66. The disposition completeness percentage is defined as the percentage of arrest charges a county reports to DPS for which a disposition has been subsequently reported and entered into the computerized criminal history system.

Counties applying for grant awards from the Office of the Governor must commit that the county will report at least 90% of convictions within five business days to the Criminal Justice Information System at the Department of Public Safety.

Uniform Crime Reporting (UCR)
Eligible applicants operating a law enforcement agency must be current on reporting complete UCR data and the Texas specific reporting mandated by 411.042 TGC, to the Texas Department of Public Safety (DPS) for inclusion in the annual Crime in Texas (CIT) publication. To be considered eligible for funding, applicants must have submitted a full twelve months of accurate data to DPS for the most recent calendar year by the deadline(s) established by DPS. Due to the importance of timely reporting, applicants are required to submit complete and accurate UCR data, as well as the Texas-mandated reporting, on a no less than monthly basis and respond promptly to requests from DPS related to the data submitted.

Entities That Collect Sexual Assault/Sex Offense Evidence or Investigate/Prosecute Sexual Assault or Other Sex Offenses
In accordance with Texas Government Code, Section 420.034, any facility or entity that collects evidence for sexual assault or other sex offenses or investigates or prosecutes a sexual assault or other sex offense for which evidence has been collected, must participate in the statewide electronic tracking system developed and implemented by the Texas Department of Public Safety. Visit DPS's Sexual Assault Evidence Tracking Program website for more information or to set up an account to begin participating. Additionally, per Section 420.042 "A law enforcement agency that receives evidence of a sexual assault or other sex offense...shall submit that evidence to a public accredited crime laboratory for analysis no later than the 30th day after the date on which that evidence was received." A law enforcement agency in possession of a significant number of Sexual Assault Evidence Kits (SAEK) where the 30-day window has passed may be considered noncompliant.

DNA Testing of Evidentiary Materials
When funds are used for DNA testing of evidentiary materials, any resulting eligible DNA profiles must be uploaded to the Combined DNA Index System (CODIS) by a government DNA lab with access to CODIS.

Interoperable Communications
Funds to support emergency communications activities must ensure compliance with the FY 2018 SAFECOM Guidance on Emergency Communications Grants; adherence to the technical standards set forth in the FCC Waiver Order, or any succeeding FCC orders, rules, or regulations pertaining to broadband operations in the 700 MHz public safety band; and are fully coordinated with the full-time Statewide Interoperability Coordinator (SWIC) for Texas.

Twelve-Step Programs
Grant funds may not be used to support or directly fund programs such as the Twelve Step Program which courts have ruled are inherently religious. PSO grant funds cannot be used to support these programs, conduct meetings, or purchase related materials.

Program Income
Applicant agrees to comply with all federal and state rules and regulations for program income and agrees to report all program income that is generated as a result of the project's activities. Applicant agrees to report program income through a formal grant adjustment and to secure PSO approval prior to use of the program income. Applicant agrees to use program income for allowable costs and agrees to expend program income immediately after PSO's approval of a grant adjustment and prior to requesting reimbursement of funds.

Deduction Method - Program income shall be deducted from total allowable costs to determine the net allowable costs. Program income shall be used for current costs unless PSO authorizes otherwise. Program income which the grantee did not anticipate at the time of the award shall be used to reduce the PSO award and grantee match rather than to increase the funds committed to the project.

Asset Seizures and Forfeitures - Program income from asset seizures and forfeitures is considered earned when the property has been adjudicated to the benefit of the plaintiff (e.g., law enforcement entity).

National Instant Background Check System (NICS)
Entities receiving funds under this solicitation that are to generate or upgrade court dispositions or other records that are relevant to National Instant Background Check System (NICS) determinations must have a system in place to ensure that all such NICS-relevant dispositions or records that are generated or upgraded are made available in timely fashion to state repositories/databases that are accessed by NICS.

Compliance with State and Federal Laws, Programs and Procedures
Local units of government, including cities, counties and other general purpose political subdivisions, as appropriate, and institutions of higher education that operate a law enforcement agency, must comply with all aspects of the programs and procedures utilized by the U.S. Department of Homeland Security ("DHS") to: (1) notify DHS of all information requested by DHS related to illegal aliens in Agency's custody; and (2) detain such illegal aliens in accordance with requests by DHS. Additionally, counties and municipalities may NOT have in effect, purport to have in effect, or make themselves subject to or bound by, any law, rule, policy, or practice (written or unwritten) that would: (1) require or authorize the public disclosure of federal law enforcement information in order to conceal, harbor, or shield from detection fugitives from justice or aliens illegally in the United States; or (2) impede federal officers from exercising authority under 8 U.S.C. § 1226(a), § 1226(c), § 1231(a), § 1357(a), § 1366(1), or § 1366(3). Lastly, eligible applicants must comply with all provisions, policies, and penalties found in Chapter 752, Subchapter C of the Texas Government Code.

Each local unit of government, and institution of higher education that operates a law enforcement agency, must download, complete and then upload into eGrants the CEO/Law Enforcement Certifications and Assurances Form certifying compliance with federal and state immigration enforcement requirements. This Form is required for each application submitted to PSO and is active until August 31, 2025 or the end of the grant period, whichever is later.

Equal Employment Opportunity Plan (EEO Plan)
If awarded, applicant agrees to comply with the Equal Employment Opportunity Program (EEOP) requirements per 28 C.F.R. § 42 Subpart E. Agencies may use the EEO Utilization Report Builder to assist with preparing Verification Forms and, if required, Utilization Reports.

Civil Rights Liaison
A civil rights liaison who will serve as the grantee's civil rights point of contact and who will be responsible for ensuring that the grantee meets all applicable civil rights requirements must be designated. The designee will act as the grantee's liaison in civil rights matters with PSO and with the federal Office of Justice Programs.

Enter the Name of the Civil Rights Liaison:

Shari Miller

Enter the Address for the Civil Rights Liaison:

712 S. Stagecoach Trail, Suite 1063 San Marcos, Texas, 78666

Enter the Phone Number for the Civil Rights Liaison [(999) 999-9999 x9999]:

512-393-2245

Overall Certification

Each applicant agency must certify to the specific requirements detailed above as well as to comply with all requirements within the PSO Funding Announcement, the *Guide to Grants*, the *Grantee Conditions and Responsibilities*, any authorizing or applicable state and federal statutes and regulations to be eligible for this program.

☑ **I certify to all of the application content & requirements.**

Project Narrative

Project Abstract

Briefly summarize the proposed project. The abstract should summarize information in the other project narrative boxes below, and should be understandable by a lay person.

This grant proposal addresses the escalating threat of fentanyl, a synthetic opioid, within the state of Texas, where it has emerged as the leading cause of death among individuals aged 18 to 45. Shocking statistics reveal a 600% surge in fentanyl-related overdose deaths between 2020 and 2022. This proposal underscores the pressing need for a comprehensive, community-based prevention program spanning multiple disciplines, including schools, public awareness campaigns, drug diversion programs, mental health treatment, and collaborative efforts between law enforcement agencies.

This proposal highlights the detrimental effects of the current lack of coordination between law enforcement and local communities in combating the fentanyl crisis. This deficiency leads to compromised law enforcement endeavors, weakened community support systems, perpetuation of stigma surrounding addiction and mental health, and obstacles to educational initiatives. Acknowledging these challenges, the proposal advocates for the development of a comprehensive strategy fostering collaboration between law enforcement and communities. Such a strategy is essential for effectively addressing the multifaceted challenges posed by the fentanyl crisis, ultimately reducing crime rates and safeguarding the well-being of individuals and communities.

The challenges posed by fentanyl, given its potency and accessibility through social media, create significant obstacles for traditional law enforcement. The effectiveness of law enforcement’s efforts is hampered by a combination of factors, including a lack of specialized training, expertise, intelligence collection, and coordination. Exploiting these gaps, drug organizations maneuver through jurisdictional boundaries, complicating apprehension and prosecution and resulting in lower conviction rates. The absence of a coordinated strategy among local, state, and federal law enforcement further creates surveillance and enforcement gaps, allowing the illicit fentanyl market to thrive. When agencies are isolated, information sharing is limited, hindering law enforcement's ability to trace the drug's source and dismantle trafficking networks. This fragmented approach not only compromises law enforcement but also allows fentanyl to infiltrate local neighborhoods, leading to a surge in overdoses and fatalities. Addressing the clandestine nature of fentanyl's production and distribution requires collaborative efforts across jurisdictions to dismantle networks and prevent the further spread of this deadly substance.

Additionally, the absence of a collaborative and proactive school and community awareness plan intensifies the isolation of individuals grappling with substance abuse and mental health issues. This substance, often disguised in counterfeit pills or mixed with other drugs like methamphetamine or cocaine, increases the risk of unwittingly ingesting lethal doses. Due to its secretive nature, it poses a significant threat to students who may be unwittingly exposed to its potency without being aware of the associated risks A fragmented approach further undermines the effectiveness of educational programs aimed at raising awareness about the dangers of fentanyl. Without a coordinated effort, disseminating accurate and timely information becomes challenging, leaving communities vulnerable to misinformation and myths surrounding the drug.

The Fentanyl Overdose Response Task Force goes beyond being just a program; it stands as a comprehensive initiative crafted to support and enhance various aspects of community life. Rather than having a singular purpose, the task force is a multifaceted initiative that addresses the diverse needs of the community. It achieves this by supporting law enforcement, engaging with schools and the community, contributing to treatment and rehabilitation efforts, aiding victims and their families, and fostering awareness. In essence, the task force represents a holistic approach to promoting community well-being and resilience. Through collaborative efforts, the program aims to create a safer, more informed, and supportive environment for everyone involved.

Community safety relies heavily on law enforcement operations, and the task force plays a crucial role in supporting and enhancing these efforts. The program collaborates closely with law enforcement agencies, offering valuable resources and investigative assistance that contribute to the overall effectiveness of maintaining community safety. This collaboration ensures a comprehensive approach to addressing issues related to drug poisonings and overdoses.

Victims and their surviving family members often encounter a challenging journey, and the task force extends its support to this vulnerable group. The program aims to alleviate the hardships faced by victims and their families by connecting them to grief counseling and other essential social services. During challenging times, the task force becomes a source of comfort and aid to both the victim and their surviving family members, offering support and promoting substance abuse and mental health treatment options.

Beyond its supporting role with law enforcement, the task force places a significant focus on school and community outreach efforts. Recognizing education as a powerful tool in preventing drug-related incidents, the program actively involves schools and the broader community. The program's goal is to heighten awareness, disseminate information, and advocate for preventive measures. The task force actively collaborates with educational institutions to cultivate a well-informed and vigilant community. Through a combination of educational programs, awareness campaigns, and community events, the task force forms connections that empower individuals to make informed choices and contribute to the development of a resilient and supportive community network.

Finally, the task force recognizes the complex challenges associated with substance abuse. As a result, it works hand-in-hand with established treatment facilities to ensure that individuals receive the necessary support and care on their journey to recovery. By fostering these partnerships, the task force aims to bridge the gap between prevention and intervention, offering a comprehensive approach to address the diverse needs of those grappling with addiction. This collaborative effort not only facilitates access to treatment but also emphasizes the importance of a supportive network, empowering individuals to embark on a path towards healing and positive life changes.

The Fentanyl Overdose Response Team was formed using evidence-based concepts like the "Community Readiness Model" and "Community-Based Participatory Research" model. The task force builds upon these models by partnering with non-profit groups and volunteers to effect change and empower communities and neighborhoods.

As a result of this pressing need, the Hays County Sheriff's Office is actively coordinating with the Travis and Williamson County Sheriff's Offices, Texas Department of Public Safety, the Drug Enforcement Administration, Federal Bureau of Investigation, and Department of Homeland Security to establish a fentanyl overdose investigation team. This dedicated team will be responsible for investigating drug poisonings and overdoses in Hays, Travis, and Williamson Counties, as well as providing crucial training and resources to other law enforcement agencies requiring assistance with overdose investigations.

Equally crucial is the task force’s coordination with state and federal prosecutors, involving the District Attorney's Offices from Hays, Travis, and Williamson Counties, as well as the United States Attorney for the Western District of Texas. This collaborative effort ensures a seamless transition from investigation to legal proceedings, leveraging both local and national resources to mount a formidable legal response against fentanyl trafficking in Texas.

The task force’s commitment to community outreach will be a vital component for its success. By partnering with school districts, PTAs, local businesses, and medical professionals, the task force is actively organizing events and workshops to educate students, parents, and communities about the dangers of fentanyl and opioids. This information, disseminated through outreach and victim service programs, plays a pivotal role in providing our communities with essential knowledge about prevention, harm reduction, an treatment resources.

The Fentanyl Overdose Response Team's funding request is being divided between the Hays County Sheriff's Office and the Williamson County Sheriff's Office. While each Sheriff's Office will handle specific financial responsibilities, the task force itself will operate seamlessly as a unified investigative unit. This streamlined coordination strengthens the team's capability to investigate and respond to drug poisonings, contributing to a cohesive and effective response to the opioid epidemic in the region.

Problem Statement

Describe the nature and scope of the underlying problem the proposed project will address. Include aspects of the problem relevant to the project's approach and activities.

Fentanyl has emerged as a pressing concern in Texas, posing significant threats to public health and safety. Studies by the Center for Disease Control indicate nationally, fentanyl is becoming the leading cause of death for individuals between the ages of 18 and
2022 statistical data from the Travis County Medical Examiner showed a 600% increase in overdose deaths between 2020 and 2022. Fentanyl poses a severe risk due to its potency; even minuscule amounts can lead to fatal overdoses. Addressing this crisis requ
community-based prevention programs involving schools, public awareness campaigns, drug diversion programs, mental health treatment, and law enforcement collaboration.

The absence of a coordinated and cooperative response in combating fentanyl between law enforcement and local communities has significant negative impacts on local areas. This lack of coordination leads to compromised law enforcement efforts, diminished co
systems, the continuation of stigma related to addiction and mental health, and obstacles to educational initiatives. Law enforcement and communities must develop a comprehensive strategy to address the multifaceted challenges posed by the fentanyl crisis, u
crime, and safeguarding the well-being of individuals and communities.
The challenges posed by fentanyl, given its potency and accessibility through social media, create significant obstacles for traditional law enforcement. The effectiveness of investigative efforts is notably hampered by a combination of factors, including a lack of s
expertise, intelligence collection, and coordination. Exploiting these gaps, drug organizations maneuver through jurisdictional boundaries, complicating apprehension and prosecution and resulting in lower conviction rates. The absence of a coordinated strategy a
federal law enforcement further creates surveillance and enforcement gaps, allowing the illicit fentanyl market to thrive. When agencies are isolated, information sharing is limited, hindering law enforcement's ability to trace the drug's sources and dismantle traf
fragmented approach not only compromises law enforcement but also allows fentanyl to infiltrate local neighborhoods, leading to a surge in overdoses and fatalities. Addressing the clandestine nature of fentanyl's production and distribution requires collaborative
jurisdictions to dismantle networks and prevent the further spread of this deadly substance.
Additionally, the absence of a collaborative and proactive school and community awareness plan intensifies the isolation of individuals grappling with substance abuse and mental health issues. This substance, often disguised in counterfeit pills or mixed with othe
methamphetamine or cocaine, increases the risk of unwittingly ingesting lethal doses. Due to its secretive nature, it poses a significant threat to students who may unwittingly be exposed to its potency without being aware of the associated risks. A fragmented a
undermines the effectiveness of educational programs aimed at raising awareness about the dangers of fentanyl. Without a coordinated effort, disseminating accurate and timely information becomes challenging, leaving communities vulnerable to misinformatio
the drug.
Ultimately, when law enforcement operates independently from community organizations, treatment centers, and public health initiatives, it undermines the link between enforcement and treatment. As a result, it is crucial to adopt a unified approach to establisl
systems for those affected by fentanyl, integrating education, awareness, prevention, treatment, and recovery services into the fabric of local communities.
The task force's design is supported by a 2016 report by the Police Executive Research Forum titled, "Building Successful Partnerships between Law Enforcement and Public Health Agencies to Address Opioid Use." The report concluded that, by using a comprehe
approach, law enforcement agencies can reduce fatalities by connecting individuals to treatment and services, deploying naloxone to reverse overdoses, addressing the dangers of drug use, and using data to inform policies and practices. The report went on to s
enforcement agencies cannot do this alone. They need the expertise and experience of their public health partners such as the treatment providers, mental and physical health professionals, addiction specialists, researchers, and others in the field who work eac
need. These partnerships are the cornerstone of the new approach to the opioid epidemic - an integrated approach that has its roots in the public health model, reflects principles of community policing, incorporates research, data into decision-making, and empl

Supporting Data

Provide supporting data for the Problem Statement. Data should be relevant to the project and its target group. For example, do not use statewide data for a local problem or national data for a statewide problem.

Fentanyl, a potent synthetic opioid, has emerged as a grave concern in Texas, posing significant threats to public health and safety. National studies by the Centers for Disease Control (CDC) indicate that fentanyl is becoming the leading cause of death for indivi
statistical data from the Travis County Medical Examiner revealed a staggering 600% increase in overdose deaths between 2020 and 2022.
At its core, fentanyl poses a severe risk due to its unparalleled potency. Even minuscule amounts can lead to fatal overdoses. The Texas Health Fentanyl Trends dashboard highlights Travis and surrounding counties as the epicenter of fentanyl-related deaths in th
100,000 individuals, a statistic significantly higher than any other county in Texas. The Centers for Disease Control and Prevention anticipates a substantial increase in drug deaths for 2023, with 70% attributed to fentanyl.
Recent DEA laboratory tests reveal a concerning trend, with seven out of 10 pills analyzed containing a potentially lethal dose of fentanyl. This marks a notable increase from two years ago when four out of 10 pills posed a similar risk. The gravity of the situatior
2022, they seized over 59.6 million fentanyl pills and 13,300 pounds of fentanyl powder, equating to over 398 million potentially lethal doses. In 2023, the seizures increased to 78.4 million fentanyl-laced fake pills and nearly 12,000 pounds of fentanyl powder, r
lethal doses. This represents an almost 34% increase in the number of fentanyl pills seized by DEA between 2022 and 2023. More shockingly, in the first quarter of fiscal year 2024, DEA seized 2,400,000 fentanyl pills and an additional 501 pounds of fentanyl po
million potentially deadly doses.
The report from the Texas Department of State Health Services (DSHS) sheds light on the local impact of the fentanyl crisis. Between 2022 and 2023, the Hays County Sheriff's Office recorded 69 fentanyl-related overdose incidents, comprising 33 juveniles and
resulting in one juvenile and five adult fatalities. In 2023, the Sheriff's Office documented 14 juvenile overdoses and 10 adult overdoses, leading to four juvenile and four adult fatalities.
The DSHS data reveals a concerning trend, indicating a consistent increase in fentanyl-related overdoses across all three counties in recent years. Travis County's situation is particularly severe, escalating from 44 overdoses in 2020 to 123 in 2022. Similarly, Wil
than 10 overdoses in 2020 to 28 in 2021.
These statistics underscore the urgent need for comprehensive and collaborative strategies involving healthcare providers, law enforcement, community organizations, and educational institutions. The escalating fentanyl crisis in Travis, Williamson, and Hays cou
efforts to mitigate its devastating effects on individuals and families across Texas.
The escalating fentanyl crisis in Texas, particularly in Hays, Travis, and Williamson counties, demands urgent attention and collaborative action. The potency of fentanyl and its devastating impact on communities require comprehensive community-based prevent
awareness campaigns, drug diversion programs, mental health treatment, and law enforcement collaboration. Immediate and coordinated efforts are imperative to mitigate the fentanyl crisis and protect the well-being of individuals and families across the state
Addressing the fentanyl crisis requires multifaceted community-based prevention programs. Schools play a crucial role in educating students about the dangers of fentanyl and other opioids, emphasizing the importance of making informed choices. Public awarer
fentanyl and promote understanding of the severe risks associated with its use. Furthermore, drug diversion programs can provide an alternative path for individuals struggling with substance abuse, offering treatment and support rather than punitive measures
into prevention efforts, recognizing the connection between mental health and substance abuse. Collaboration with law enforcement is essential to curb the illicit distribution of fentanyl and dismantle trafficking networks.

Project Approach & Activities

Describe the methodologies, approaches, and activities to be employed by the project. This should logically tie back to the Problem Statement.

This proposal seeks funding to formally establish a fentanyl overdose response team to address fentanyl-related poisonings and overdoses in Hays, Travis, and Williamson Counties. Grant funding will add investigative personnel as well as provide training, equip task force. The proposal includes salaries and benefits for investigators, a crime analyst, and an administrative assistant, as well as overtime, equipment, office supplies, travel, and training. The funding request is being divided between the Hays and Williamson handle specific financial responsibilities, the task force itself will operate as a unified investigative unit. This will strengthen the team's ability to investigate drug poisoning, contributing to a cohesive and effective response to the opioid epidemic in the region.

The absence of a unified state strategy to combat fentanyl manufacturing and distribution hampers law enforcement efforts, diverting resources from high-priority targets. The potency and accessibility of fentanyl, combined with a lack of training and coordinati address this, the Hays, Travis, and Williamson County Sheriff's Offices have entered into a cooperative agreement with Texas DPS, DEA, FBI, and HSI to strengthen relationships and employ a unified approach in responding to and investigating suspected drug p supported by the Hays, Travis, and Williamson County District Attorney's Offices and the United States Attorney's Office for the Western District of Texas.

The task force has devised a comprehensive strategy to combat fentanyl-related crimes. This strategic plan places a strong emphasis on targeting individuals and organizations involved in fentanyl manufacturing and distribution, with the overarching goal of red enhance community safety. Working collaboratively with Operation 360, a community-based non-profit actively engaged with schools, communities, victim advocates, and researchers, the task force has crafted an evidence-based, data-driven intervention and p outreach, facilitating access to treatment and social services, and implementing public awareness campaigns that underscore the dangers of fentanyl.

Drug poisoning and overdose investigations primarily center on determining the circumstances surrounding the ingestion of substances leading to an individual's death, navigating a complex landscape of addiction, illicit drug distribution, and potential unintentio detectives will noticeably enhance the efficiency of the overdose task force. Coordination between law enforcement and forensic teams, crucial for drug poisoning and overdose investigations, is streamlined with a narcotics detective's unique understanding of na force's capability to trace fentanyl sources, apprehend traffickers, and disrupt distribution channels, fortifying enforcement efforts and addressing the root causes of the fentanyl crisis. A dedicated team of narcotics detectives ensures a thorough investigative pr investigative assistance, resources, and training for less experienced law enforcement agencies.
Integrating a crime analyst into an overdose investigation team significantly enhances its capabilities. Crime analysts employ data-driven methodologies to analyze patterns, trends, and connections within fentanyl-related incidents. By scrutinizing various data reports, and community data, the analyst can identify hotspots, trafficking routes, and potential sources of the illicit drugs. This proactive approach aids investigators by improving resource allocation, prioritizing leads, and anticipating emerging threats. A crime contributing to a more effective and impactful overdose investigation effort.
Supplementing the overdose investigation team with an administrative assistant, specialized equipment, and training further heightens its efficacy. The administrative assistant streamlines operations, enhancing coordination, data management, and communicat ensuring a timely overdose investigation. Training, tailored to overdose investigations, equips staff members with the essential skills necessary to navigate the complexities associated with overdose investigations, allowing them to proactively investigate overdo impact, safeguarding communities against the risks of drug overdoses.

Capacity & Capabilities

Describe the applicant organization's background as well as any organizational and staff capabilities and qualifications necessary to carry out this project using the approaches and activities provided above, including any essential collaborative partnerships.

The task force consists of a dedicated team of professionals, including healthcare providers, educators, community organizers, and experienced law enforcement personnel. The task force is being managed by Hays County Sheriff's Deputy Tyson Hodges, a retire with 35 years of law enforcement experience. Operational and administrative assistance is being provided by DEA ASAC Robert Kennedy, PhD; DEA ASAC (Retired) Angela Von Trytek, PhD; DEA Compliance Attorney Kathryn Quinn; and attorney and former prose reports to and is being overseen by Hays County Sheriff Gary Cutler; Travis County Sheriff Sally Hernandez; Williamson County Sheriff Mike Gleason; and supervisors from the Texas Department of Public Safety, Drug Enforcement Administration, Federal Bureau Security. By pooling the expertise and capabilities of these individuals and agencies, the task force ensures a comprehensive and coordinated response to the challenges posed by fentanyl-related crimes. Further, this collaborative approach enables the task force technologies, and specialized skills, enhancing the overall effectiveness of investigative operations and resource utilization in the fight against fentanyl trafficking.

The task force's collaborative efforts extend beyond investigative operations to include a coordinated approach with state and federal prosecutors. Prosecutions are being supported and overseen by Hays County District Attorney Kelly Higgins, Travis County Distr Attorney Shawn Dick, and Jamie Esparza, United States Attorney for the Western District of Texas. Federal prosecutions are locally supervised by Assistant United States Attorneys Michelle Fernald and Mark Marshall. By fostering close partnerships with these ind its investigative efforts are seamlessly transitioned to the prosecution phase. The involvement of both state and federal prosecuting agencies signifies a comprehensive strategy, aligning local and national resources to strengthen the legal response to the challen

The task force's holistic approach further extends to coordinating substance abuse and mental health objectives through esteemed professionals and community services. Dr. Mark Escott and other medical experts play pivotal roles in aligning strategies that addr individuals affected by substance abuse, particularly fentanyl-related issues. Additionally, the task force collaborates with Bluebonnet Trails Community Services to leverage their expertise in mental health services, ensuring a comprehensive response to the chal health information dissemination and community events are seamlessly coordinated through the Williamson County and Cities Health District and the Hays County Local Health Department. These partnerships enhance the task force's outreach, promoting educa foster a more informed and resilient response to the impact of fentanyl on public health and well-being.

The task force's commitment to school and public awareness is aligned through its coordination and sponsorship of workshops and events through its School and Community Outreach Liaisons Debra Hodges, M.Ed. and Georgetown Police Officer Justin Robbins. T impactful initiatives that raise awareness about the dangers of fentanyl within educational institutions and the broader community. The collaboration with Hays County Independent School District further ensures a localized perspective and direct engagement wit force collaborates with non-profit organizations such as the Texas Council of PTAs, Livegy, Texas Against Fentanyl, A Change for Cam, and Forever 15, to further strengthen its outreach programs. By joining forces with these non-profits, the task force ensures a and public arenas, fostering a comprehensive understanding of fentanyl-related risks and prevention strategies. This collaborative approach underscores the task force's commitment to community engagement, education, and proactive measures to address the

The effectiveness and integrity of the task force's program is underpinned by a meticulous auditing process. Texas State University (TSU) Dr. Jeffrey Bumgarner, TSU Doctoral Student, Dustin Werley, and the University of North Texas – Dallas Dr. Paul Reynolds w research support, and program evaluation to ensure the program aligns with best practices and evidence-based strategies. DEA ASACs Robert Kennedy, PhD and DEA ASAC (Retired) Angela Von Trytek, PhD will assist the Performance Management Team by prov related to federal statutory and regulatory compliance matters. Furthermore, master educators and experts in curriculum and instruction, Cory Duty, M.Ed. and Nichole Lee, M.Ed. will actively contribute to shaping and refining the program content, ensuring it is multi-faceted support and auditing mechanism not only enhances the credibility of the task force but also signifies a commitment to continuous improvement and adherence to the highest educational standards.

The task force has received additional encouragement and support from key community leaders, including Williamson County Judge Bill Gravell and Hays County Judge Ruben Becerra. Their endorsement underscores the significance of the task force in addressin within the respective counties. Judges Gravell and Becerra's support serves as a testament to the collaborative and community-driven nature of the task force, acknowledging the importance of a unified approach in tackling the complexities associated with subst advocacy further solidifies the program's standing within the community, fostering a shared commitment to the well-being and safety of residents in Williamson and Hays counties.

Performance Management

Describe how the applicant organization will measure success for this project. Describe the overall goals, objectives, and strategies for this project and how the organization will collect, track, and maintain the relevant data needed to determine if the project is achi

The effectiveness and integrity of the task force's program is underpinned by a meticulous auditing process. Texas State University (TSU) Dr. Jeffrey Bumgarner, TSU Doctoral Candidate Dustin Werley, and the University of North Texas – Dallas Dr. Paul Reynolds program evaluation to ensure the program aligns with best practices and evidence-based strategies. DEA ASACs Robert Kennedy, Ph.D., and Angela Von Trytek, Ph.D. will assist by providing operational and administrative expertise related to federal statutory anc M.Ed., and Nichole Lee, M.Ed. will actively contribute to shaping and refining the program content, ensuring it is tailored to the unique needs of the region.

The primary aim of this review is to perform a comprehensive impact analysis, exploring the task force's organizational structure, mission objectives, and its impact on fentanyl in the community. This review should analyze social costs, public health implications, economy. The task force will leverage this information to anticipate future trends, predict potential shifts in fentanyl distribution networks, influence policy adjustments, and alter consumer behavior. The insights gleaned from this review will be shared with healt express goal of creating regional fentanyl mitigation teams throughout the State of Texas.

Examining data between 2020-2023, the study will establish benchmarks for fentanyl production, transportation, and distribution costs. Comprehensive research will unravel the intricate supply chain dynamics, identifying key players, roles, and structures from

The study will delve into supply-side costs, assessing production, transportation, and distribution expenses, alongside other associated costs. Estimating annual revenue through market demand, price points, and sales volume, it will deduct total costs, offering a competition, demand fluctuations, and geographic reach will be analyzed, with a focus on how law enforcement actions influence the fentanyl market. Surveys tracking availability and dark web analysis monitoring market changes will provide insights into disrup

Using historical data between 2020-2023, as a benchmark, the audit will gauge law enforcement effectiveness in collaboration, operations, seizures, and intelligence gathering. Assessing the impact of collaboration on disrupting fentanyl supply chains and evalua traffickers ensures a thorough understanding of law enforcement's role in addressing fentanyl challenges. Analyzing federal and state arrest strategies, considering jurisdictional impacts, and reviewing prosecutions and sentencing will contribute to a comprehens conduct forensic analysis of fentanyl seizures, ensuring a multifaceted evaluation. Finally, law enforcement training will be assessed to determine its effectiveness, especially in recognizing and responding to fentanyl-related incidents.

The review will also measure the effectiveness of educational materials and programs in schools and workplaces, ensuring positive changes in fentanyl knowledge levels. Student surveys will identify areas lacking information, while open discussions with students participation, surveys, and social media metrics will assess public awareness, while community feedback will gauge program effectiveness. Evaluating behavioral changes within communities will determine the impact on treatment-seeking behaviors.

Finally, the study will assess legislative policies and governmental procedures to determine the effectiveness of fentanyl regulation, law enforcement, prosecution, diversion, and harm reduction initiatives.

Target Group

Describe or list the agencies, individuals, or other groups to whom you expect to provide services, including any relevant data.

The task force goes beyond being just a program; it stands as a comprehensive initiative crafted to support and enhance various aspects of community life. Rather than having a singular purpose, the task force is a multifaceted initiative that addresses the diver enforcement, engaging with schools and the community, contributing to treatment and rehabilitation efforts, assisting victims and their families, and fostering awareness. In essence, the task force represents a holistic approach to promoting community well-be create a safer, more informed, and supportive environment for everyone involved.

Community safety relies heavily on law enforcement operations, and the task force plays a crucial role in supporting and enhancing these efforts. As a result, the Hays, Travis, and Williamson County Sheriff's Offices have entered into a cooperative agreement w consolidate resources and adopt a unified approach in responding to suspected drug poisonings and overdoses. By pooling resources, the task force has developed a comprehensive response strategy, capitalizing on a wealth of knowledge, advanced technologie investigating overdose incidents. By closely aligning and coordinating with Hays County District Attorney Kelly Higgins, Travis County District Attorney Jose Garza, Williamson County District Attorney Shawn Dick, and United States Attorney Jamie Esparza, our st prosecutions. This collaborative approach effectively and efficiently leverages both local and national resources to enhance the legal response to the pressing challenges posed by fentanyl trafficking in Texas. The collaborative efforts of this task force exemplify a and prosecutorial facets in the ongoing fight against fentanyl-related crimes.

Victims and their surviving family members often encounter a challenging journey, and the task force extends its support to this vulnerable group. The program aims to alleviate the hardships faced by victims and their families by connecting them to grief couns force becomes a source of comfort and aid to both the victim and their surviving family members, offering support and promoting substance abuse and mental health treatment options.

Beyond its supporting role with law enforcement, the task force places a significant focus on school and community outreach efforts. Recognizing education as a powerful tool in preventing drug-related incidents, the program actively involves schools and the br disseminate information, and advocate for preventive measures. The task force actively collaborates with educational institutions to cultivate a well-informed and vigilant community. Through a combination of educational programs, awareness campaigns, and c individuals to make informed choices and contribute to the development of a resilient and supportive community network.

Finally, the task force recognizes the complex challenges associated with substance abuse. As a result, it works hand-in-hand with established treatment facilities to ensure that individuals receive the necessary support and care on their journey to recovery. By between prevention and intervention, offering a comprehensive approach to address the diverse needs of those grappling with addiction. This collaborative effort not only facilitates access to treatment but also emphasizes the importance of a supportive networ positive life changes.

Evidence-Based Practices

Describe the research or evidence that led the applicant to select the methods, approach, and activities described above. Where possible, cite specific research, evidence, or published best/promising practices model used as the basis for the project's design. If the applicant must describe why they believe the method to be promising.

The task force uses concepts identified in both the "Community Readiness Model" and the "Community-Based Participatory Research" model. These models are designed as a multi-disciplinary approach that empowers schools, communities, law enforcement, and r
communities to develop a deeper understanding of the fentanyl crisis and its impact on not only their community but Texas as a whole. Law enforcement's participation is crucial for ensuring that the program aligns with the local culture and remains sustainable ov
involving local experts and resources with a deep connection to the community. The model acknowledges that these individuals may not be professionals, but they possess a profound understanding of local dynamics and their relevance to the fentanyl crisis.

The task force's design is supported by a 2016 report by the Police Executive Research Forum titled, "Building Successful Partnerships between Law Enforcement and Public Health Agencies to Address Opioid Use." In the report, the authors noted that the United St
approach," encompassing prevention, education, treatment, and enforcement initiatives. Typically, law enforcement agencies focused on enforcement, while social services and educators handled prevention and treatment. However, the fentanyl epidemic has prom
executives now recognize the necessity to expand their role beyond merely endorsing drug treatment, education, and prevention principles. "Focusing on getting people into treatment rather than on simply arresting them is an unprecedented idea for law enforcen
is critical for us to take on," said Richard Biehl, Chief of Police, Dayton (Ohio) Police Department.

The report noted a significant shift in how law enforcement is responding to this crisis. The report concluded that, by using a comprehensive proactive approach, law enforcement agencies can reduce fatalities by connecting individuals to treatment and services, de
data to inform policies and practices. The report went on to say, "Of course, law enforcement agencies cannot do this alone. They need the expertise and experience of their public health partners such as the treatment providers, mental and physical health profess
help people in need. These partnerships are the cornerstone of the new approach to the opioid epidemic—an integrated approach that has its roots in the public health model, reflects principles of community policing, incorporates research and data into decision m

With respect to the task force's "Multi-Disciplinary Approach", the task force, in partnership with Operation 360, has devised a comprehensive strategy to combat fentanyl-related crimes. Operation 360 is a community-based non-profit that actively engages with sc
street-level outreach, access to treatment and social services, and public awareness campaigns that underscore the dangers of fentanyl. Operation 360 uses various concepts identified in both the "Community Readiness Model" and the "Community-Based Participa
empowers schools, communities, local community leaders, and researchers to actively participate in public health issues. This approach allows schools and communities to develop a deeper understanding of the fentanyl crisis and its impact on not only their comm
the program aligns with the local culture and remains sustainable over time. This approach values community insights and emphasizes the importance of involving local experts and resources with a deep connection to the community. The model acknowledges that
local dynamics and their relevance to the fentanyl crisis.

The task force's use of a Community Readiness Model (CRM) is supported by a 2019 study by the National Library of Medicine, National Center for Biotechnology Information, which emphasized the strengths of CRM. The study highlighted its efficacy in gathering v
interviews were instrumental in pinpointing available resources and key figures within the community who could spearhead initiatives in their respective communities. The authors noted that, beyond its primary focus on child health, the CRM process also brought a
and community members. They also stated that CRM was particularly valuable when used in tandem with other data collection methods such as qualitative research, focus groups, and surveys. Using CRM allowed researchers to initiate conversations with commun
Finally, the authors noted that, when aligned with the Community-Based Participatory Research approach, CRM maintained a balance between scientific research and community needs, a necessity when addressing complex public health issues.

Additionally, studies show that the "Community-Based Participatory Research" (CBPR) model is an "equitable approach to research in which researchers, organizations, and community members collaborate on all aspects of a research project. CBPR empowers all st
projects aim to increase the body of knowledge and the public's awareness of a given phenomenon and apply that knowledge to create social and political interventions that will benefit the community. CBPR projects range in their approaches to community engage
making processes, whereas others empower community members to direct of the goals of the project."

The parallels between drug overdose investigations and homicide investigations underscore the need for dedicated detectives, as both demand a meticulous and systematic approach in law enforcement. While these investigations share similarities in the thorough
fundamental distinction lies in the intent behind the incidents. Homicide investigations focus on intentional acts resulting in a loss of life, aiming to identify and apprehend the perpetrator. In contrast, drug overdose investigations primarily center on determining th
navigating a complex landscape of addiction, illicit drug distribution, and potential unintentional fatalities. Although investigative processes may overlap, the unique motivations and nuances inherent in each case necessitate specialized considerations and expertise
The Bureau of Justice Assistance's (BJA) guidelines for homicide investigations emphasize the importance of dedicated detectives, recommending an optimal caseload of three to four new homicide cases per year for each investigator. This allows for a thorough exa
follow-ups on prior cases, serving as secondary investigators, attending training, and managing administrative duties.
A significant challenge in managing caseloads arises from the structure of shift schedules, particularly in units lacking a formal case assignment system. Detectives may find themselves handling multiple new cases in succession, especially in units utilizing an on-ca
investigating all new overdose deaths occurring overnight, resulting in a consecutive series of new cases for detectives. This situation places a significant burden on investigators, particularly when coupled with the ongoing receipt of new cases during regular day s
tasks unrelated to overdose investigations, including handling non-overdose cases, administrative duties, witness location, and other departmental details.
With respect to employing a crime analyst, the task force is following recommendations identified in several studies including a September 2005, BJA study titled, "Intelligence-Led Bureau of Justice Assistance/Policing: The New Intelligence Architecture." In the stu
intelligence operations and community-oriented policing. The study recommended that police organizations reassess their current policies and protocols and any strategically developed initiative should incorporate intelligence collection to effectively address comm
a policy rather than an informal practice. Furthermore, it highlighted the need for a centralized hub, or a "one-stop clearinghouse" for criminal intelligence and counterterrorism information and underscored the importance of basing intelligence on robust data anal

Note from Grantee to OOG

Save Note from Grantee to OOG

Printer Friendly

Previous Save and Continue

9:13 AM

Agency Name: Hays County **Grant/App:** 5086001 **Start Date:** 10/1/2024
Project Title: Fentanyl Overdose Response Team **Status:** Pending OOG Review **End Date:** 10/31/2025 **Fund Source:** CI-Byrne State Crisis Intervention Program
Current Program Manager: **Liquidation Date:**
Original Award: $0.00
Current Budget: $531,547.00 **Current Award:** $0.00 **CFDA:** 16.738 **OOG Solicitation:** FY2025 State Crisis Intervention Grant Program Announcement

Printer Friendly

General Information and Instructions

View Introduction

View Icons

Fund Source Information and Requirements

Introduction

This section contains questions about your project. It is very important for applicants to review their funding announcement for guidance on how to fill out this section. Unless otherwise specified, answers should be about the EXPECTED activities to occur during the project period.

OOG-Defined Project Activity Area

Select Your Project Activities

Select one or more project activities that best describe your project. Once you have selected one or more project activities from the list, then click on the **Update Activity Selection** button to add those selections to your project. You will then be able to describe the project activities you selected and added to your project in the **Detailed Project Activity Area**. For a description of the eligible project activities, please click on the **View a Description of the Activities** button.

Collapse Activity List

- [ ] Crisis Intervention
- [ ] Interpersonal Violence Prevention and Intervention
- [x] Violent Crime Reduction

Update Activity Selection | View a Description of the Activities

Detailed Project Activity Area

Describe Each Activity

This section lists all of the items you selected for OOG and grantee-defined project activities.

Click on the 'pencil' icon next to each activity to enter the percentage of time spent on the activity as well as a brief description of how the activity is performed. Click on the 'diskette' icon to save the information entered for each activity.

Activity	Dedicated Percentage	Description of Activity
Violent Crime Reduction	100	This task force is specifically designed to quickly and efficiently respond to and investigate fentanyl-related incidents in a uniform and coordinated manner. This design allows a team of specialized investigators work across jurisdictional boundaries to target drug trafficking organizations, including their manufacturing and distribution operations. Finally, the task force will work with local school and community groups, businesses, and treatment and rehabilitation professionals to address the root causes of the fentanyl epidemic.

- [ ] **Check this box to Confirm Deletion of a Project Activity**

Note: Once you **Save** each item above, the subtotal for the **Dedicated Percentage** column will refresh below under **Total**.
Total: 100 Percent

Note from Grantee to OOG

Save Note from Grantee to OOG

Printer Friendly

Previous | Save and Continue

You are logged in as **User Name**: APecina

9:13 AM

Agency Name: Hays County **Grant/App:** 5086001 **Start Date:** 10/1/2024
Project Title: Fentanyl Overdose Response Team **Status:** Pending OOG Review **End Date:** 10/31/2025 **Fund Source:** CI-Byrne State Crisis Intervention Program
Current Program Manager: **Liquidation Date:**
Original Award: $0.00
Current Budget: $531,547.00 **Current Award:** $0.00 **CFDA:** 16.738 **OOG Solicitation:** FY2025 State Crisis Intervention Grant Program Announcement

Printer Friendly

General Information and Instructions

View Introduction

Fund Source Information and Requirements

Requirements

Introduction
The performance measures listed in this section are tied to an activity as selected by the applicant on the Activities tab.

These measures are essentially estimated targets of the volume of activity in a project. OOG uses them during the application phase to evaluate the project, and during the active grant phase to measure progress towards those targets. Measures should reflect an applicant's best estimate of the level of activities they expect to perform *during the grant period*, unless specifically instructed otherwise.

Note*: If the measures are not visible on this tab, simply navigate back to the Activities tab, add one or more activities to your project, save your selection(s), then return to the Measures tab.*

OOG-Defined Performance Measures
Grantees are required to report for each measure listed and should enter a "0" for any measure not applicable to their project.

In addition, grantees may also be required to report fund specific progress report data. Grantees must follow the progress reporting instructions provided by the Public Safety Office.

Custom-Defined Performance Measures
OOG encourages grantees to add any additional custom measures that would help us better understand the project's activities and performance, but these are not required. To add a custom measure, click on the "Create Custom Performance Measures" button.

Entering the OOG-Defined Output Performance Measure Information

Please enter the required target levels for each output measure listed below.

Output Measures	Target Level
Equipment or technology: Individuals/Operators equipped	10
Targeted Investigation: Criminal cases resulting in arrest.	25
Targeted Investigation: Grant-funded investigations carried out by the unit/division	25
Targeted Prosecution: Criminal cases resulting in conviction/deferred adjudication.	25
Targeted Prosecution: Grant-funded prosecutions carried out by the unit/division.	25
Training or professional development: Individuals provided	50
Training or professional development: Individuals received	50
Violence Prevention/Intervention Programs: Number of hours of services provided.	36
Violence Prevention/Intervention Programs: Number of individuals completing program requirements.	0
Violence Prevention/Intervention Programs: Number of individuals receiving behavioral/mental health treatment or other support services.	0
Violence Prevention/Intervention Programs: Number of individuals served.	0

Create Custom Performance Measures

Entering Custom-Defined Output Performance Measures

Please enter any optional self-defined output measures.

Output Measures	Target Level

Entering Custom-Defined Outcome Performance Measures

Please enter any optional self-defined outcome measures.

Outcome Measures	Target Level

Note from Grantee to OOG

Save Note from Grantee to OOG

Printer Friendly

Previous

9:13 AM

Agency Name: Hays County **Grant/App:** 5086001 **Start Date:** 10/1/2024
Project Title: Fentanyl Overdose Response Team **Status:** Pending OOG Review **End Date:** 10/31/2025 **Fund Source:** CI-Byrne State Crisis Intervention Program
Current Program Manager: **Liquidation Date:**
Original Award: $0.00
Current Budget: $531,547.00 **Current Award:** $0.00 **CFDA:** 16.738 **OOG Solicitation:** FY2025 State Crisis Intervention Grant Program Announcement

Printer Friendly

General Information and Instructions

View Introduction

View Instructions

Select and Enter Budget Line Item Details

	Budget Category	OOG Funds	Cash Match	In Kind Match	GPI	Total Project
-	Personnel	$433,097.00	$0.00	$0.00	$0.00	$433,097.00

OOG-Defined Line Item	OOG Funds	Cash Match	In Kind Match	GPI	Total Project
Assistant	$63,303.00	$0.00	$0.00	$0.00	$63,303.00

Grantee-Defined Line Item	OOG Funds	Cash Match	In Kind Match	GPI	Total Project	Qty / % of Salary
Administrative Assistant III - $42,066 salary plus the fringe rate set at 33.55% brings the Fringe to $21,237 totaling the requested salary at $63,303.	$63,303.00	$0.00	$0.00	$0.00	$63,303.00	1

	OOG Funds	Cash Match	In Kind Match	GPI	Total Project
Overtime for All Other Personnel	$59,520.00	$0.00	$0.00	$0.00	$59,520.00

Grantee-Defined Line Item	OOG Funds	Cash Match	In Kind Match	GPI	Total Project	Qty / % of Salary
Overtime - Overtime for 3 Investigators will be reimbursed using Hays County Policy for overtime rate of pay per assigned Investigator – estimated at $19,840 annually per Investigator (DOJ/DEA annual cap).	$59,520.00	$0.00	$0.00	$0.00	$59,520.00	3

Certified Peace Officer - Sheriff's Office	$310,274.00	$0.00	$0.00	$0.00	$310,274.00

Grantee-Defined Line Item	OOG Funds	Cash Match	In Kind Match	GPI	Total Project	Qty / % of Salary
Task Force Director - The salary will be the equivalent to a HCSO Captain (MBS0-9) = $103,718 salary plus the fringe rate at 24.15%, this brings Fringe cost set at $22,206. Total requested salary is $125,924. Two Narcotics Detectives - The salary will be the equivalent to a HCSO Narcotics Detective (MBS4) = $75,921 salary plus the fringe rate at 24.15%, this brings Fringe cost set at $16,254. Total requested salary is $92,175.	$310,274.00	$0.00	$0.00	$0.00	$310,274.00	3

Contractual and Professional Services	$0.00	$0.00	$0.00	$0.00	$0.00
Travel and Training	$53,200.00	$0.00	$0.00	$0.00	$53,200.00

OOG-Defined Line Item	OOG Funds	Cash Match	In Kind Match	GPI	Total Project
In-State Registration Fees, Training, and/or Travel	$45,700.00	$0.00	$0.00	$0.00	$45,700.00

Grantee-Defined Line Item	OOG Funds	Cash Match	In Kind Match	GPI	Total Project	Qty / % of Salary
Rental of 3 law enforcement related vehicles at a cost of $800 per vehicle for 12 months. $9,600 per rental vehicle or $28,800 total.	$28,800.00	$0.00	$0.00	$0.00	$28,800.00	0
Vehicle Fuel - Estimated at 100 gallons per month at $3.50 per gallon ($350) for 12 months = $4,200 for 3 vehicles or $12,600 total	$8,400.00	$0.00	$0.00	$0.00	$8,400.00	0
Training for Law Enforcement Personnel - 1 one-day law enforcement training sessions at $3,500 each and 1 two-day training sessions at $5,000 each for a total of $8,500. South Texas HIDTA will provide funding for additional trainings.	$8,500.00	$0.00	$0.00	$0.00	$8,500.00	0

In-State Incidentals and/or Mileage	$7,500.00	$0.00	$0.00	$0.00	$7,500.00

Grantee-Defined Line Item	OOG Funds	Cash Match	In Kind Match	GPI	Total Project	Qty / % of Salary
Travel - Based on Hays County Travel Policy for per diems, mileage reimbursement and/or hotel accommodations. Allows for 7 days of scheduled or unscheduled travel for 5 investigators per year for training and or investigative duties.	$7,500.00	$0.00	$0.00	$0.00	$7,500.00	0

Equipment	$42,750.00	$0.00	$0.00	$0.00	$42,750.00

OOG-Defined Line Item	OOG Funds	Cash Match	In Kind Match	GPI	Total Project
Laptop System and Accessories	$2,250.00	$0.00	$0.00	$0.00	$2,250.00

Grantee-Defined Line Item	OOG Funds	Cash Match	In Kind Match	GPI	Total Project	Qty / % of Salary
Laptops, Monitors, and Keyboards - Laptops 2 units, Monitors, and keyboards. total request of $2,250.	$2,250.00	$0.00	$0.00	$0.00	$2,250.00	6

Network and Server Software and/or Licenses	$32,000.00	$0.00	$0.00	$0.00	$32,000.00

Grantee-Defined Line Item	OOG Funds	Cash Match	In Kind Match	GPI	Total Project	Qty / % of Salary
Specialized Law Enforcement Software - $32,000 for annual subscription of Greykey encryption software	$32,000.00	$0.00	$0.00	$0.00	$32,000.00	1

Storage	$8,500.00	$0.00	$0.00	$0.00	$8,500.00

Grantee-Defined Line Item	OOG Funds	Cash Match	In Kind Match	GPI	Total Project	Qty / % of Salary
Office Equipment – Copying and Scanning Machine - Monthly rental fee for a moderate volume copying and scanning machine, including maintenance, fees,	$6,000.00	$0.00	$0.00	$0.00	$6,000.00	3

& service costs for 12 months at $500 per month = $6,000 annually.							
Printing, Publication, and Duplication of Materials - Cost for copying paper, note pads, pens and pencils, folders, binders, USB drives, printer ink, locking file cabinets, and other office supplies.	$2,500.00	$0.00	$0.00	$0.00	$2,500.00	10	

-	Supplies and Direct Operating Expenses	$2,500.00	$0.00	$0.00	$0.00	$2,500.00

OOG-Defined Line Item	OOG Funds	Cash Match	In Kind Match	GPI	Total Project
- Project Supplies (e.g., binocular, battery, flexicuff, drug testing kit)	$2,500.00	$0.00	$0.00	$0.00	$2,500.00

Grantee-Defined Line Item	OOG Funds	Cash Match	In Kind Match	GPI	Total Project	Qty / % of Salary
Specialized Law Enforcement Software and Personal Protective Equipment - $2,500 for personal protection equipment including, latex gloves, M-95 anti-particulate masks, N100 disposable filtering face piece respirator, and chemical resistant coveralls.	$2,500.00	$0.00	$0.00	$0.00	$2,500.00	0

	Indirect Costs	$0.00	$0.00	$0.00	$0.00	$0.00

Budget Summary Totals

OOG Funds:	Cash Match:	In Kind Match:	GPI:	Total Project:
$531,547.00	$0.00	$0.00	$0.00	$531,547.00

Export Your Budget Detail Item(s)

Export To Excel

Note from Grantee to OOG

Save Note from Grantee to OOG

Printer Friendly

Previous

9:13 AM

Agency Name: Hays County **Grant/App:** 5086001 **Start Date:** 10/1/2024
Project Title: Fentanyl Overdose Response Team **Status:** Pending OOG Review **End Date:** 10/31/2025 **Fund Source:** CI-Byrne State Crisis Intervention Program
Current Program Manager: **Liquidation Date:**
Original Award: $0.00
Current Budget: $531,547.00 **Current Award:** $0.00 **CFDA:** 16.738 **OOG Solicitation:** FY2025 State Crisis Intervention Grant Program Announcement

Printer Friendly

General Information and Instructions

View Introduction

View Single Audits

Fund Source Information and Requirements

Resolution from Governing Body

Applications from nonprofit corporations, local units of governments, and other political subdivisions must include a resolution that contains the following:

1. Authorization by your governing body for the submission of the application to the Public Safety Office (PSO) that clearly identifies the name of the project for which funding is requested;
2. A commitment to provide all applicable matching funds;
3. A designation of the name and/or title of an authorized official who is given the authority to apply for, accept, reject, alter, or terminate a grant (Note: If a name is provided, you must update the PSO should the official change during the grant period.); and
4. A written assurance that, in the event of loss or misuse of grant funds, the governing body will return all funds to PSO.

Upon approval from your agency's governing body, upload the approved resolution to eGrants by clicking on the **Upload Files** sub-tab located in the **Summary** tab.

Contract Compliance

Will PSO grant funds be used to support any contracts for professional services?

Select the appropriate response:

- Yes
- No

For applicant agencies that selected **Yes** above, describe how you will monitor the activities of the sub-contractor(s) for compliance with the contract provisions (including equipment purchases), deliverables, and all applicable statutes, rules, regulations, and guidelines governing this project.

Enter a description for monitoring contract compliance:

Lobbying

For applicant agencies requesting grant funds in excess of $100,000, have any federally appropriated funds been paid or will be paid to any person for influencing or attempting to influence an officer or employee of any agency, a member of Congress, an officer or employee of Congress, or an employee of a member of Congress in connection with the awarding of any federal contract, the making of any federal grant, the making of any federal loan, the entering into of any cooperative agreement, and the extension, continuation, renewal, amendment, or modification of any federal contract, grant loan, or cooperative agreement?

Select the appropriate response:

- Yes
- No
- N/A

For applicant agencies that selected either **No** or **N/A** above, have any non-federal funds been paid or will be paid to any person for influencing or attempting to influence an officer or employee of any agency, a member of Congress, an officer or employee of Congress in connection with this federal contract, loan, or cooperative agreement?

Select the appropriate response:

- Yes
- No
- N/A

Fiscal Year

Provide the begin and end date for the applicant agency's fiscal year (e.g., 09/01/20xx to 08/31/20xx).

Enter the Begin Date [mm/dd/yyyy]:

9/1/2024

Enter the End Date [mm/dd/yyyy]:

10/30/2025

Sources of Financial Support

Each applicant must provide the amount of grant funds expended during the most recently completed fiscal year for the following sources:

Enter the amount (in Whole Dollars $) of Federal Grant Funds expended:

25438228

Enter the amount (in Whole Dollars $) of State Grant Funds expended:

4384584

Single Audit

Applicants who expend less than $750,000 in federal grant funding or less than $750,000 in state grant funding are exempt from the Single Audit Act and cannot charge audit costs to a PSO grant. However, PSO may require a limited scope audit as defined in 2 CFR Part 200, Subpart F - Audit Requirements.

Has the applicant agency expended federal grant funding of $750,000 or more, or state grant funding of $750,000 or more during the most recently completed fiscal year?

Select the appropriate response:

- (selected) Yes
- No

Applicant agencies that selected **Yes** above, provide the date of your organization's last annual single audit, performed by an independent auditor in accordance with the State of Texas Single Audit Circular; or CFR Part 200, Subpart F - Audit Requirements.

Enter the date of your last annual single audit:

3/31/2023

Debarment

Each applicant agency will certify that it and its principals (as defined in 2 CFR Part 180.995):

- Are not presently debarred, suspended, proposed for debarment, declared ineligible, sentenced to a denial of Federal benefits by a State or Federal Court, or voluntarily excluded from participation in this transaction by any federal department or agency;
- Have not within a three-year period preceding this application been convicted of or had a civil judgment rendered against them for commission of fraud or a criminal offense in connection with obtaining, attempting to obtain, or performing a public (federal, state, or local) transaction or contract under a public transaction; violation of federal or state antitrust statutes or commission of embezzlement, theft, forgery, bribery, falsification or destruction of records, making false statements, or receiving stolen property; or
- Are not presently indicted for or otherwise criminally or civilly charged by a governmental entity (federal, state, or local) with commission of any of the offenses enumerated in the above bullet; and have not within a three-year period preceding this application had one or more public transactions (federal, state, or local) terminated for cause or default.

Select the appropriate response:

- (selected) I Certify
- Unable to Certify

If you selected **Unable to Certify** above, please provide an explanation as to why the applicant agency cannot certify the statements.

FFATA Certification

Certification of Recipient Highly Compensated Officers
The Federal Funding Accountability and Transparency Act (FFATA) requires Prime Recipients (CJD) to report the names and total compensation of each of the five most highly compensated officers (a.k.a. positions) of each sub recipient organization for the most recently completed fiscal year preceding the year in which the grant is awarded if the subrecipient answers **YES** to the **FIRST** statement but **NO** to the **SECOND** statement listed below.

In the sub recipient's preceding completed fiscal year, did the sub recipient receive: (1) 80 percent or more of its annual gross revenue from Federal contracts (and subcontracts), loans, grants (and subgrants) and cooperative agreements; AND (2) $25,000,000 or more in annual gross revenue from Federal contracts (and subcontracts), loans, grants (and subgrants) and cooperative agreements?

Select the appropriate response:

- ○ Yes
- ◉ No

Does the public have access to information about the compensation of the senior executives through periodic reports filed under Section 13(a) or 15(d) of the Securities Exchange Act of 1934 (15 U.S.C. 78m(a), 78o(d)) or Section 6104 of the Internal Revenue Code of 1986?

Select the appropriate response:

- ◉ Yes
- ○ No

If you answered **YES** to the **FIRST** statement and **NO** to the **SECOND** statement, please provide the name and total compensation amount of each of the five most highly compensated officers (a.k.a. positions) within your agency for the current calendar year. If you answered NO to the first statement you are NOT required to provide the name and compensation amounts. NOTE: "Total compensation" means the complete pay package of each of the sub recipient's compensated officers, including all forms of money, benefits, services, and in-kind payments (see SEC Regulations: 17 CCR 229.402).

Position 1 - Name:

Position 1 - Total Compensation ($):

0

Position 2 - Name:

Position 2 - Total Compensation ($):

0

Position 3 - Name:

Position 3 - Total Compensation ($):

0

Position 4 - Name:

Position 4 - Total Compensation ($):

0

Position 5 - Name:

Position 5 - Total Compensation ($):

0

Note from Grantee to OOG

Save Note from Grantee to OOG

Printer Friendly

Previous Save and Continue

AGENDA ITEM REQUEST FORM: G. 13.

Hays County Commissioners Court

Date: 03/26/2024

Requested By: T.CRUMLEY

Sponsor: Commissioner Shell

Agenda Item

Authorize the submission of a resolution and grant application to the Office of The Governor, Homeland Security Grant Program in the amount of $56,615.00. **SHELL/T.CRUMLEY**

Summary

The Hays County Sheriff's Office is proposing a crucial project to enhance community safety through the implementation of Viken detection equipment. This equipment will be utilized in conducting thorough vehicle searches, to intercept illegal firearms, contraband, and potential human trafficking activities. With its advanced scanning capabilities, the equipment will enable deputies to detect hidden compartments and illicit items more efficiently, thereby reducing the circulation of dangerous weapons and illegal substances within the county. Under the Narrative Tab, Hays County Deputies are still gathering data to give to the Grants Department to input in the Existing Capabilities section. Along with the empty Measures Tab. This information will be completed before the application deadline of 4/4/24. No match is required.

Attachments

Application
Resolution

2:56 PM

Agency Name: Hays County
Project Title: Hays County Sheriff's Office VIKEN
Grant/App: 5242001
Status: Application Pending Submission
Current Program Manager:
Original Award: $0.00
Current Budget: $56,615.00
Current Award: $0.00
Start Date: 9/1/2024
End Date: 8/31/2026
Liquidation Date:
Fund Source: HS-Homeland Security Grant Program (HSGP)
CFDA: 97.067
OOG Solicitation: UASI Austin LETPA Solicitation - FY24 Announcement

Printer Friendly

NOTICE – 2-HOUR TIMEOUT: This page will timeout after 2 hours of inactivity. You may save your work at any time by clicking the **Save Only** button at the bottom of the page. The system will alert you when there is 15 minutes remaining in your session.

General Information and Instructions

View Introduction

View How Do I Assign a New Contact?

View List of Permissions By Role

View Messages to OOG

Identifying Information

Applicant Agency Name:
Hays County

Project Title:
Hays County Sheriff's Office VIKEN

Division or Unit to Administer the Project:
Sheriff's Office

Agency Address Line 1:

810 S. Stagecoach Trail

Agency Address Line 2:

City: San Marcos

State: Texas

Zip Code: 78666-8093

Start Date: 9/1/2024

End Date: 8/31/2026

Plan Year: 2025

Target Area Information

Select Your Project's Geographic Impact:

(●) Local ( ) Regional ( ) Statewide

Select Your Primary Service County:
The county in which the majority of services will be provided, or select **Impact is Statewide**: Hays

Your project will provide services within:
Hays

Select all of the counties within the project's service area:
Click to View County List

View the list of counties you selected that are within the project's service area:
Bexar,Comal,Travis

Grant Officials Information

Authorized Official Email Address:
judge.becerra@co.hays.tx.us

Assign Authorized Official

Title:
The Honorable

Last Name:
Becerra

First Name:
Ruben

Business Phone:
512-393-2205

Fax Number:

Position:
County Judge

Salutation:
Judge

Address Line 1:
111 E San Antonio St

Address Line 2:

City:
San Marcos

State:
Texas

Zip Code:
78666

Financial Officer Email Address:

marisol.alonzo@co.hays.tx.us

Assign Financial Officer

Title:
Ms.

Last Name:
Alonzo

First Name:
Marisol

Business Phone:
512-393-2283

Fax Number:
512-393-2248

Position:
County Auditor

Salutation:
Ms.

Address Line 1:
712 S. Stagecoach Trl., Ste. 1071

Address Line 2:

City:
San Marcos

State:
Texas

Zip Code:
78666

Project Director Email Address:

ashton.pecina@co.hays.tx.us

Assign Project Director

Title:
Mr.

Last Name:
Pecina

First Name:
Ashton

Business Phone:
512-393-2209

Fax Number:

Position:
Grant Writer

Salutation:
Mr.

Address Line 1:
715 S. Stagecoach Trail

Address Line 2:
5123932209

City:
San Marcos

State:
Texas

Zip Code:
78666

Grant Writer Email Address:

simone.corprew@co.hays.tx.us

Assign Grant Writer

Title:
Ms.

Last Name:
Corprew

First Name:
Simone

Business Phone:
512-749-1161

Fax Number:

Position:
Grant Writer

Salutation:
Ms.

Address Line 1:
712 S Stagecoach Trail

Address Line 2:

City:
San Marcos

State:
Texas

Zip Code:
78666

Note from Grantee to OOG

Save Note from Grantee to OOG

Printer Friendly

Previous

Save Only

2:53 PM

Agency Name: Hays County
Project Title: Hays County Sheriff's Office VIKEN
Grant/App: 5242001
Status: Application Pending Submission
Current Program Manager:
Original Award: $0.00
Current Award: $0.00
Current Budget: $56,615.00
Start Date: 9/1/2024
End Date: 8/31/2026
Liquidation Date:
CFDA: 97.067
Fund Source: HS-Homeland Security Grant Program (HSGP)
OOG Solicitation: UASI Austin LETPA Solicitation - FY24 Announcement

Printer Friendly

NOTICE – 2-HOUR TIMEOUT: This page will timeout after 2 hours of inactivity. You may save your work at any time by clicking the **Save Only** button at the bottom of the page. The system will alert you when there is 15 minutes remaining in your session.

General Information and Instructions

View Introduction

Fund Source Information and Requirements

Overview

The purpose of the Homeland Security Grant Program (HSGP) is to support state and local efforts to prevent terrorism and other catastrophic events and to prepare the Nation for the threats and hazards that pose the greatest risk to the security of the United States. HSGP provides funding to implement investments that build, sustain, and deliver the 32 core capabilities essential to achieving the National Preparedness Goal (the Goal) of a secure and resilient Nation. The building, sustainment, and delivery of these core capabilities are not exclusive to any single level of government, organization, or community, but rather, require the combined effort of the whole community. HSGP supports core capabilities across the five mission areas of Prevention, Protection, Mitigation, Response, and Recovery based on allowable costs.

Primary Mission and Purpose

Urban Area Security Initiative (UASI) - Law Enforcement Terrorism Prevention Activities (LETPA): Supports programs that address the unique multidiscipline planning, organization, equipment, training, and exercise needs of high-threat, high-density Urban Areas in efforts to build and sustain law enforcement capabilities to prevent terrorist attacks and support critical prevention and protection activities. Urban areas must employ regional approaches to overall preparedness.

Eligibility Requirements

Cybersecurity Training Requirement
Local units of governments must comply with the Cybersecurity Training requirements described in Section 772.012 and Section 2054.5191 of the Texas Government Code. Local governments determined to not be in compliance with the cybersecurity requirements required by Section 2054.5191 of the Texas Government Code are ineligible for OOG grant funds until the second anniversary of the date the local government is determined ineligible. Government entities must annually certify their compliance with the training requirements using the Cybersecurity Training Certification for State and Local Government. A copy of the Training Certification must be uploaded to your eGrants application. For more information or to access available training programs, visit the Texas Department of Information Resources Statewide Cybersecurity Awareness Training page.

Criminal History Reporting
Entities receiving funds from PSO must be located in a county that has an average of 90% or above on both adult and juvenile dispositions entered into the computerized criminal history database maintained by the Texas Department of Public Safety (DPS) as directed in the *Texas Code of Criminal Procedure, Chapter 66*. The disposition completeness percentage is defined as the percentage of arrest charges a county reports to DPS for which a disposition has been subsequently reported and entered into the computerized criminal history system.

Counties applying for grant awards from the Office of the Governor must commit that the county will report at least 90% of convictions within five business days to the Criminal Justice Information System at the Department of Public Safety.

Uniform Crime Reporting (UCR)
Eligible applicants operating a law enforcement agency must be current on reporting complete UCR data and the Texas specific reporting mandated by 411.042 TGC, to the Texas Department of Public Safety (DPS) for inclusion in the annual Crime in Texas (CIT) publication. To be considered eligible for funding, applicants must have submitted a full twelve months of accurate data to DPS for the most recent calendar year by the deadline(s) established by DPS. Due to the importance of timely reporting, applicants are required to submit complete and accurate UCR data, as well as the Texas-mandated reporting, on a no less than monthly basis and respond promptly to requests from DPS related to the data submitted.

Entities That Collect Sexual Assault/Sex Offense Evidence or Investigate/Prosecute Sexual Assault or Other Sex Offenses
In accordance with Texas Government Code, Section 420.034, any facility or entity that collects evidence for sexual assault or other sex offenses or investigates or prosecutes a sexual assault or other sex offense for which evidence has been collected, must participate in the statewide electronic tracking system developed and implemented by the Texas Department of Public Safety. Visit DPS's Sexual Assault Evidence Tracking Program website for more information or to set up an account to begin participating. Additionally, per Section 420.042 "A law enforcement agency that receives evidence of a sexual assault or other sex offense...shall submit that evidence to a public accredited crime laboratory for analysis no later than the 30th day after the date on which that evidence was received." A law enforcement agency in possession of a significant number of Sexual Assault Evidence Kits (SAEK) where the 30-day window has passed may be considered noncompliant.

National Incident Management System (NIMS) Implementation
Grantees are required to implement NIMS. The NIMS uses a systematic approach to integrate the best existing processes and methods into a unified national framework for incident management across all homeland security activities including prevention, protection, response, mitigation, and recovery. Grantees must use standardized resource management concepts for resource typing, credentialing, and an inventory to facilitate the effective identification, dispatch, deployment, tracking and recovery of resources.

Emergency Management Plans (Intermediate Level)
Cities and counties must have a current emergency management plan or be a legally established member of an inter-jurisdictional emergency management program with a plan on file with the Texas Division of Emergency Management (TDEM). Plans must be maintained throughout the entire grant performance period. If you have questions concerning your Emergency Management Plan (preparedness) level, contact your Emergency Management Coordinator (EMC) or your regional Council of Governments (COG). For questions concerning plan deficiencies, contact TDEM at tdem.plans@tdem.texas.gov.

Program Income
Applicant agrees to comply with all federal and state rules and regulations for program income and agrees to report all program income that is generated as a result of the project's activities. Applicant agrees to report program income through a formal grant adjustment and to secure PSO approval prior to use of the program income. Applicant agrees to use program income for allowable costs and agrees to expend program income immediately after PSO's approval of a grant adjustment and prior to requesting reimbursement of funds.

Deduction Method - Program income shall be deducted from total allowable costs to determine the net allowable costs. Program income shall be used for current costs unless PSO authorizes otherwise. Program income which the grantee did not anticipate at the time of the award shall be used to reduce the PSO award and grantee match rather than to increase the funds committed to the project.

Asset Seizures and Forfeitures - Program income from asset seizures and forfeitures is considered earned when the property has been adjudicated to the benefit of the plaintiff (e.g., law enforcement entity).

Program Requirements

Building and Sustaining Core Capabilities

1. All capabilities being built or sustained must have a clear link to one or more Core Capabilities in the National Preparedness Goal.
2. Many capabilities which support terrorism preparedness simultaneously support preparedness for other hazards. Grantees must demonstrate this dual-use quality for any activities implemented under this program that are not explicitly focused on terrorism preparedness. Activities implemented under SHSP must support terrorism preparedness by building or sustaining capabilities that relate to the prevention of, protection from, mitigation of, response to, and recovery from terrorism.
3. Funding should be used to sustain core capabilities. New capabilities should not be built at the expense of maintaining current and critically needed core capabilities. New capabilities must be aligned with capability targets and gaps identified through the THIRA/SPR process.

Mission Areas
The National Preparedness Goal organizes the core capabilities into the five mission areas:

- Prevention. Prevent, avoid or stop an imminent, threatened or actual act of terrorism.
- Protection. Protect our citizens, residents, visitors, and assets against the greatest threats and hazards in a manner that allows our interests, aspirations, and way of life to thrive.
- Mitigation. Reduce the loss of life and property by lessening the impact of future disasters.
- Response. Respond quickly to save lives, protect property and the environment, and meet basic human needs in the aftermath of a catastrophic incident.
- Recovery. Recover through a focus on the timely restoration, strengthening and revitalization of infrastructure, housing and a sustainable economy, as well as the health, social, cultural, historic and environmental fabric of communities affected by a catastrophic incident.

Nationwide Cyber Security Review
Grantees will be required to complete the Nationwide Cybersecurity Review (NCSR), enabling agencies to benchmark and measure progress of improving their cybersecurity posture. The Chief Information Officer (CIO), Chief Information Security Officer (CISO), or equivalent for each recipient agency should complete the NCSR. If there is no CIO or CISO, the most senior cybersecurity professional should complete the assessment. The NCSR is available at no cost to the user and takes approximately 2-3 hours to complete. For more information about the NCSR, visit: https://www.cisecurity.org/ms-isac/services/ncsr/.

LETPA

Law Enforcement Terrorism Prevention Activities (LETPA)
The state is responsible for ensuring that at least 35 percent (35%) of the combined HSGP funds allocated under SHSP and UASI are dedicated towards law enforcement terrorism prevention activities, as defined in 6 U.S.C. 607.

Grant projects must be consistent with the Federal Emergency Management Agency (FEMA) Information Bulletin (IB) 412 which discusses eligible activities outlined in:

a. The National Prevention Framework;
b. The National Protection Framework where capabilities are shared with the prevention mission area;
c. Section 2006 of the Homeland Security Act of 2002, as amended; and
d. The FY 2007 Homeland Security Grant Program Guidance and Application Kit.

Activities eligible for use of LETPA focused funds include but are not limited to: Maturation and enhancement of designated state and major Urban Area fusion centers, including information sharing and analysis, threat recognition, terrorist interdiction, and training/hiring of intelligence analysts. Coordination between fusion centers and other analytical and investigative efforts. Implementation and maintenance of the Nationwide Suspicious Activity Reporting (SAR) Initiative. Implementation of the "If You See Something, Say Something" campaign to raise public awareness of indicators of terrorism and terrorism-related crime and associated efforts to increase the sharing of information with public and private sector partners. Increased physical security, through law enforcement personnel and other protective measures, by implementing preventative and protective measures at critical infrastructure sites or at-risk nonprofit organizations.

Overall Certification

Each applicant agency must certify to the specific requirements detailed above as well as to comply with all requirements within the PSO Funding Announcement, the *Guide to Grants*, the *Grantee Conditions and Responsibilities*, any authorizing or applicable state and federal statutes and regulations to be eligible for this program.

☑ **I certify to all of the application content and requirements.**

Project Narrative

Project Summary

Briefly summarize the project, including proposed activities and intended impact.

The Hays County Sheriff's Office is proposing a crucial project to enhance community safety through the implementation of Viken detection equipment. This equipment will be utilized in conducting thorough vehicle searches to intercept illegal firearms, contraband, and potential human trafficking activities. With its advanced scanning capabilities, the equipment will enable deputies to detect hidden compartments and illicit items more efficiently, thereby reducing the circulation of dangerous weapons and illegal substances within the county.

Not only will this project bolster officer safety by equipping deputies with the tools needed to conduct searches more effectively and swiftly, but it will also significantly enhance public safety. By intercepting illegal firearms and contraband, the Sheriff's Office will mitigate the risk of violent crimes and drug-related incidents in Hays County. Moreover, the equipment's capability to detect human trafficking activities will aid in rescuing victims and dismantling criminal networks involved in exploiting vulnerable individuals. As a result, residents of Hays County can expect a safer environment where the prevalence of crime and associated risks is reduced, fostering a greater sense of security and well-being within the community. Additionally, the proactive approach taken by law enforcement to address these pressing issues demonstrates a commitment to protecting and serving the residents of Hays County, further strengthening trust and cooperation between law enforcement agencies and the community. Overall, this project represents a significant step towards creating a safer and more secure living environment for all inhabitants of Hays County.

Problem Statement

Provide a detailed account of the issues, threats or hazards that your project will target. For federal Homeland Security Grants, include specific page references to the regional or state *Threat and Hazard Identification and Risk Assessment (THIRA)*, as applicable.

Hays County is facing significant challenges due to the emergence of the highly potent opioid, fentanyl, and the prevalence of human trafficking in the area. Fentanyl, known for its potency and danger even in small doses, has become a pressing issue, leading to a rise in overdoses and fatalities within the county. Its availability on the streets poses a grave threat to public health and safety, exacerbating the ongoing opioid crisis gripping communities nationwide. Moreover, the presence of human trafficking compounds these challenges, with vulnerable individuals being exploited and trafficked for various purposes, including forced labor and sexual exploitation. These intertwined issues not only endanger the lives of individuals directly affected but also contribute to broader social and public safety concerns within Hays County.

In response to these urgent challenges, the Hays County Sheriff's Office recognizes the critical need for effective tools and resources to combat the spread of fentanyl and address human trafficking effectively. The implementation of Viken detection equipment will serve as a vital resource for the Sheriff's Office in tackling these issues head-on. With its advanced scanning capabilities and chemical analysis technology, the Viken equipment will enable deputies to detect even trace amounts of fentanyl and other illicit substances, facilitating the interception of these dangerous drugs before they can cause harm within the community. Furthermore, the equipment's capacity to uncover hidden compartments and identify suspicious activities will aid in the detection and disruption of human trafficking operations, leading to the rescue of victims and the dismantling of trafficking networks operating within Hays County. As such, the Viken detection equipment will play a crucial role in safeguarding the residents of Hays County from the threats posed by fentanyl and human trafficking, promoting public safety and well-being throughout the community.

Existing Capability Levels

Describe the existing capability levels, including resources that are currently in place to support this project prior to the use of grant funds.

h

Capability Gaps

Describe the capability gaps which will be addressed by the project. For federal Homeland Security Grants, include specific page references to the regional or statewide State Preparedness Report (SPR).

The Hays County Sheriff's Office currently faces a significant capability gap in its law enforcement efforts due to the absence of specialized equipment for vehicle scanning during traffic stops and probable cause searches. Without advanced technology like the Viken detection equipment, deputies are compelled to resort to time-consuming and resource-intensive methods, such as manually inspecting vehicles or removing panels, to uncover concealed contraband or illicit substances. This lack of efficient detection capabilities not only prolongs the duration of traffic stops but also consumes valuable manpower and financial resources, leading to inefficiencies in law enforcement operations.

The acquisition of Viken detection equipment will address this capability gap by providing deputies with the means to conduct rapid and thorough scans of vehicles during traffic stops and probable cause searches. With its advanced scanning capabilities and chemical analysis technology, the Viken equipment will enable deputies to identify hidden compartments and detect illicit substances with precision and efficiency. By streamlining the search process, the equipment will significantly reduce the time and resources expended on manual inspections, allowing deputies to focus their efforts more effectively and expeditiously. Ultimately, the integration of Viken detection equipment into the Sheriff's Office's operations will not only enhance law enforcement capabilities but also contribute to cost savings and operational efficiencies, thereby maximizing the agency's ability to ensure public safety and security in Hays County.

Impact Statement

Describe the project objectives and how this project will maintain capabilities or reduce capability gaps.

The proposed project aims to equip the Hays County Sheriff's Office with Viken detection equipment to address pressing public safety concerns, particularly the influx of illicit substances like fentanyl and the prevalence of human trafficking within the county. The primary objectives of this project include enhancing the Sheriff's Office's capability to intercept illegal firearms, contraband, and narcotics during vehicle searches, as well as facilitating the identification and rescue of victims of human trafficking. By leveraging the advanced scanning capabilities and chemical analysis technology of the Viken equipment, deputies will be able to conduct more thorough and efficient searches, thereby improving the detection and interception of illegal activities.

Currently, Hays County suffers from a significant capability gap in its law enforcement efforts to combat the spread of illicit substances and human trafficking due to the lack of specialized detection equipment like Viken. Without this equipment, deputies face challenges in effectively identifying concealed contraband and detecting hidden compartments in vehicles, which are commonly used for transporting illegal firearms, narcotics, and victims of human trafficking. This capability gap not only hampers the Sheriff's Office's ability to intercept dangerous substances like fentanyl before they reach the streets but also limits their capacity to disrupt human trafficking networks operating within the county. Consequently, Hays County remains vulnerable to the detrimental effects of these criminal activities, including increased drug-related incidents, overdoses, and exploitation of vulnerable individuals. Implementing Viken detection equipment will bridge this capability gap, empowering the Sheriff's Office to proactively address these challenges and better protect the residents of Hays County from the threats posed by illicit substances and human trafficking.

Homeland Security Priority Action

Identify the Texas Homeland Security Priority Action most closely aligned with this project. Each Priority Action is linked with an *Objective from the Texas Homeland Security Strategic Plan (HSSP)*. List the Priority Action by number and text (e.g. *1.2.3 Expand and enhance the network of human sources that can provide detailed and relevant information on known or suspected terrorist and criminal enterprises*.)

1.1.3 - Enhance the state's capacity to identify, assess, monitor, and disrupt potential domestic terrorism and other mass casualty threats, particularly those that could impact special events, soft targets, and crowded places.

Target Group

Identify the target group and population expected to benefit from this project.

The target group and population to benefit from this proposed project is the residents of Hays County and the Hays County Sheriff's Office.

Long-Term Approach

Describe how the applicant agency will sustain the capabilities supported by this project without additional federal or state funds. If sustainment is dependent upon federal or state grants, describe the ongoing need for future grants, as applicable.

As Hays County continues to experience rapid growth and development, the Hays County Sheriff's Office recognizes the increasing need for effective measures to maintain public safety and combat emerging threats such as the spread of fentanyl and human trafficking. With population growth comes greater demands on law enforcement to ensure the security and well-being of residents, making it imperative for the Sheriff's Office to leverage available resources to address these pressing issues. Therefore, the Sheriff's Office is depending on this specific grant opportunity to acquire Viken detection equipment, recognizing its potential to significantly enhance the county's ability to mitigate the risks associated with illicit substances and human trafficking.

Securing the grant to purchase Viken detection equipment is crucial not only for improving public safety but also for demonstrating to county officials the Sheriff's Office's commitment to effectively addressing these critical issues. By investing in advanced technology like Viken, the Sheriff's Office aims to deter the influx of fentanyl and disrupt human trafficking operations within Hays County, thereby safeguarding the community and demonstrating proactive leadership in combating crime. The acquisition of this equipment will underscore the Sheriff's Office's dedication to leveraging innovative solutions to tackle evolving challenges, ultimately fostering a safer and more secure environment for all residents of Hays County.

Note from Grantee to OOG

Save Note from Grantee to OOG

Printer Friendly

Previous

Save Only

2:57 PM

Agency Name: Hays County
Project Title: Hays County Sheriff's Office VIKEN
Grant/App: 5242001
Status: Application Pending Submission
Current Program Manager:
Original Award: $0.00
Current Award: $0.00
Start Date: 9/1/2024
End Date: 8/31/2026
Liquidation Date:
Fund Source: HS-Homeland Security Grant Program (HSGP)
Current Budget: $56,615.00
CFDA: 97.067
OOG Solicitation: UASI Austin LETPA Solicitation - FY24 Announcement

Printer Friendly

NOTICE – 2-HOUR TIMEOUT: This page will timeout after 2 hours of inactivity. You may save your work at any time by clicking the **Save Only** button at the bottom of the page. The system will alert you when there is 15 minutes remaining in your session.

General Information and Instructions

View Introduction

View Icons

Fund Source Information and Requirements

HSGP Instructions for Project Activity Selection

Homeland Security Grant Program (HSGP) applicants should only select one project activity. The eGrants system will allow multiple selections, but each HSGP subrecipient project must fit into one and only one of the Investment Categories that are listed as project activities under the "Activity List".

Urban Area Impact

Identify the Urban Area Strategic Plan Goal and Objective that most closely aligns with this project. List the Goal/Objective specific to your Urban Area Strategic Plan by number and text *(e.g., Goal 5: Interoperable Communications. Sustain standards-based, shared systems with adequate coverage and capacity to facilitate seamless interoperable communications throughout the Urban Area. Objective 2: Complete the deployment of standards-based shared systems to serve the region.)*

Goal 1 - 1.1.3 - Enhance the state's capacity to identify, assess, monitor, and disrupt potential domestic terrorism and other mass casualty threats, particularly those that could impact special events, soft targets, and crowded places.

OOG-Defined Project Activity Area

Select Your Project Activities

Select one or more project activities that best describe your project. Once you have selected one or more project activities from the list, then click on the **Update Activity Selection** button to add those selections to your project. You will then be able to describe the project activities you selected and added to your project in the **Detailed Project Activity Area**. For a description of the eligible project activities, please click on the **View a Description of the Activities** button.

Collapse Activity List

- [x] Combating Domestic Violent Extremism
- [ ] Emergency Operations Center Technology and Enhancements
- [ ] Enhancing Election Security
- [ ] Information and Intelligence Sharing/Cooperation
- [ ] Interoperable Emergency Communications
- [ ] Planning - Homeland Security
- [ ] Protection of Soft Targets/Crowded Places
- [ ] Support of First Responder Capabilities

Update Activity Selection | View a Description of the Activities

Grantee-Defined Project Activity Area

Create Your Own Project Activity

Some activities may not be covered in the previous selection area. This section allows you to create and edit a customized project activity in the text bar. Type in your self-defined **Project Activity** and then click the **Add Custom Item** button.

Add Custom Item

Detailed Project Activity Area

Describe Each Activity

This section lists all of the items you selected for OOG and grantee-defined project activities.

Click on the 'pencil' icon next to each activity to enter the percentage of time spent on the activity as well as a brief description of how the activity is performed. Click on the 'diskette' icon to save the information entered for each activity.

Activity	Edit	Dedicated Percentage	Description of Activity	Delete

Combating Domestic Violent Extremism		100	The VIKEN equipment will enhance the Hays County Sheriff's Office deputies with XRAY equipment that will detect illegal drugs, firearms, and the possibility of human trafficking.	

☐ **Check this box to Confirm Deletion of a Project Activity**

Note: Once you **Save** each item above, the subtotal for the **Dedicated Percentage** column will refresh below under **Total**.
Total: 100 Percent

Note from Grantee to OOG

Save Note from Grantee to OOG

Printer Friendly

Previous

Save Only

You are logged in as **User Name**: APecina

2:57 PM

Agency Name: Hays County
Project Title: Hays County Sheriff's Office VIKEN
Grant/App: 5242001
Status: Application Pending Submission
Current Program Manager:
Original Award: $0.00
Current Award: $0.00
Start Date: 9/1/2024
End Date: 8/31/2026
Liquidation Date:
Fund Source: HS-Homeland Security Grant Program (HSGP)
Current Budget: $56,615.00
CFDA: 97.067
OOG Solicitation: UASI Austin LETPA Solicitation - FY24 Announcement

Printer Friendly

General Information and Instructions

View Introduction

Fund Source Information and Requirements

Requirements

Introduction
The performance measures listed in this section are tied to an activity as selected by the applicant on the Activities tab.

These measures are essentially estimated targets of the volume of activity in a project. OOG uses them during the application phase to evaluate the project, and during the active grant phase to measure progress towards those targets. Measures should reflect an applicant's best estimate of the level of activities they expect to perform *during the grant period*, unless specifically instructed otherwise.

***Note**: If the measures are not visible on this tab, simply navigate back to the Activities tab, add **ONLY** one activity to your project, save your selection, then return to the Measures tab.*

OOG-Defined Performance Measures
Grantees are required to report for each measure listed and should enter a "0" for any measure not applicable to their project.

In addition, grantees may also be required to report fund specific progress report data. Grantees must follow the progress reporting instructions provided by the Public Safety Office.

Custom-Defined Performance Measures
OOG encourages grantees to add any additional custom measures that would help us better understand the project's activities and performance, but these are not required. To add a custom measure, click on the "Create Custom Performance Measures" button.

Fusion Centers Only

Please indicate which Fusion Center this project supports:

- ◯ Austin Regional Intelligence Center
- ◯ Dallas Fusion Center
- ◯ El Paso Multi-Agency Tactical Response Information eXchange (MATRIX)
- ◯ Fort Worth Intelligence Exchange
- ◯ Houston Regional Intelligence Service Center
- ◯ North Texas Fusion Center
- ◯ Southwest Texas Fusion Center
- ◯ Texas Joint Crime Information Center
- ◯ **[N/A - PSO Use Only]**

Fusion Centers Only Measures

State and major Urban Area fusion centers receiving SHSP or UASI grant funds will be evaluated based on compliance with the guidance and requirements for the National Network as set forth by DHS Intelligence and Analysis (I&A) through the annual Fusion Center Assessment. The applicant must utilize its data from the annual Fusion Center Assessment when developing the planned project investment. Each Fusion Center project must align to, and reference, specific performance areas of the Assessment that the funding is intended to support.

Reference # DHS I&A Fusion Center Performance Measures

Please select the DHS I&A performance measure(s) this project funding will support (select all that apply):

☐ **2024.1** Percentage of federal Information Intelligence Reports (IIRs) originating from fusion center information that address a specific Intelligence Community need

☐ **2024.2** Percentage of federal IIRs originating from fusion center information that the Intelligence Community otherwise used in performing its mission (e.g., contained first-time reporting; corroborated existing information; addressed a critical intelligence gaps; or helped to define an issue or target).

☐ **2024.3** Number of SARs vetted and submitted by fusion centers that result in the initiation or enhancement of an investigation by the FBI

☐ **2024.4** Number of SAR vetted and submitted by fusion centers that involve an individual on the Watchlist

☐ **2024.5** Percentage of Requests for Information (RFIs) from the Terrorist Screening Center (TSC) for which fusion centers provided information for a TSC case file

☐ **2024.6** Percentage of I&A Watchlist nominations that were initiated or updated existing case files based on information provided by fusion centers

☐ **2024.7** Number of distributable analytic products co-authored by one or more fusion centers and/or federal agencies

☐ **2024.8** Percentage of fusion center distributable analytic products that address Homeland Security topics

☐ **2024.9** Percentage of fusion center distributable analytic products that address state/local customer information needs

☐ **2024.10** Percentage of key customers reporting that fusion center products are relevant

- ☐ **2024.11** Percentage of key customers reporting that fusion center services are relevant
- ☐ **2024.12** Percentage of key customers reporting that fusion center products are timely for mission needs
- ☐ **2024.13** Percentage of key customers reporting that fusion center services are timely for mission needs
- ☐ **2024.14** Percentage of key customers reporting that fusion center products influenced their decision making related to threat response activities within their AOR
- ☐ **2024.15** Percentage of key customers reporting that fusion center services influenced their decision making related to threat response activities within their AOR
- ☐ **2024.16** Percentage of key customers reporting that fusion center products resulted in increased situational awareness of threats within their AOR
- ☐ **2024.17** Percentage of key customers reporting that fusion center services resulted in increased situational awareness of threats within their AOR
- ☐ **2024.18** Number of tips and leads vetted by the fusion center
- ☐ **2024.19** Number of tips and leads vetted by the fusion center that were provided to other F/SLTT agencies for follow up action
- ☐ **2024.20** Number of responses to RFIs from all sources
- ☐ **2024.21** Number of situational awareness products developed and disseminated by fusion centers
- ☐ **2024.22** Number of case support and/or tactical products developed and disseminated by fusion centers
- ☐ **2024.23** Percentage of federally designated special events in which fusion centers played a direct role
- ☐ **2024.24** Percentage of federally declared disasters in which fusion centers played a direct role
- ☐ **2024.25** Number of public safety incidents in which fusion centers played a direct role

Entering the OOG-Defined Output Performance Measure Information

Please enter the required target levels for each output measure listed below.

Edit	Output Measures	Target Level
	Number of exercises conducted.	
	Number of grant funded intelligence analyst positions.	
	Number of individuals participating in exercises.	
	Number of intelligence and information sharing systems created, maintained or enhanced.	
	Number of intelligence products created.	
	Number of people trained.	
	Number of planning/coordination meetings attended.	
	Number of planning/coordination meetings conducted (including whole community as appropriate).	

	Number of plans developed or updated.	
	Number of risk assessments conducted.	
	Number of trainings conducted.	

Entering the OOG-Defined Outcome Performance Measure Information

Please enter the required target levels for each outcome measure listed below.

Edit	Outcome Measures	Target Level
	Number of agencies actively participating in the Intelligence and Information Sharing program.	
	Number of intelligence products distributed/shared.	
	Number of stakeholders participating in planning/coordination meetings.	

Create Custom Performance Measures

Entering Custom-Defined Output Performance Measures

Please enter any optional self-defined output measures.

Edit	Output Measures	Target Level	Delete
			Delete
			Delete
			Delete
			Delete
			Delete

Entering Custom-Defined Outcome Performance Measures

Please enter any optional self-defined outcome measures.

Edit	Outcome Measures	Target Level	Delete
			Delete
			Delete
			Delete
			Delete
			Delete

Note from Grantee to OOG

Save Note from Grantee to OOG

Printer Friendly

Previous Save and Continue

2:59 PM

Agency Name: Hays County
Project Title: Hays County Sheriff's Office VIKEN
Grant/App: 5242001
Status: Application Pending Submission
Current Program Manager:
Original Award: $0.00
Start Date: 9/1/2024
End Date: 8/31/2026
Liquidation Date:
Fund Source: HS-Homeland Security Grant Program (HSGP)
Current Budget: $56,615.00
Current Award: $0.00
CFDA: 97.067
OOG Solicitation: UASI Austin LETPA Solicitation - FY24 Announcement

Printer Friendly

General Information and Instructions

View Introduction

View Instructions

Select and Enter Budget Line Item Details

	New Budget Item	Budget Category	OOG Funds	Cash Match	In Kind Match	GPI	Total Project
		Personnel	$0.00	$0.00	$0.00	$0.00	$0.00
		Contractual and Professional Services	$0.00	$0.00	$0.00	$0.00	$0.00
		Travel and Training	$5,250.00	$0.00	$0.00	$0.00	$5,250.00

OOG-Defined Line Item	OOG Funds	Cash Match	In Kind Match	GPI	Total Project
In-State Incidentals and/or Mileage (Exercises)	$5,250.00	$0.00	$0.00	$0.00	$5,250.00

Edit	Grantee-Defined Line Item	OOG Funds	Cash Match	In Kind Match	GPI	Total Project	Qty / % of Salary
	ON-SITE HANDHELD TRAINING SESSION [CONUS] Includes one on-site trainer, travel & expenses (anywhere inside the US), materials, one day of classroom learning, and hands-on environment use. Max of 15 participants. Qty 1 x $5,250 = $5,250	$5,250.00	$0.00	$0.00	$0.00	$5,250.00	0

		Equipment	$51,365.00	$0.00	$0.00	$0.00	$51,365.00

OOG-Defined Line Item	OOG Funds	Cash Match	In Kind Match	GPI	Total Project
15IN-00-XRAY System, Mobile Search & Inspection; X-Ray	$51,365.00	$0.00	$0.00	$0.00	$51,365.00

Edit	Grantee-Defined Line Item	OOG Funds	Cash Match	In Kind Match	GPI	Total Project	Qty / % of Salary
	140 kV / 7W Tube & BTX Detector | BTX Standard Accessories Kit | Rolling Weatherproof Case ***Compatible with Broadwing-DTX Dynamic Transmission Detector Accessory, Qty 1 x $46,250 = $46,250. NH SERIES BUILD CUSTOMIZATION: +Pb Trap Detection Qty 1 x $5,000 = $5,000. Domestic Ground Shipping, Qty 1 x $115 = $115.	$51,365.00	$0.00	$0.00	$0.00	$51,365.00	3

		Supplies and Direct Operating Expenses	$0.00	$0.00	$0.00	$0.00	$0.00
		Indirect Costs	$0.00	$0.00	$0.00	$0.00	$0.00

Budget Summary Totals

OOG Funds:	Cash Match:	In Kind Match:	GPI:	Total Project:
$56,615.00	$0.00	$0.00	$0.00	$56,615.00

Click to access the FEMA Authorized Equipment List (AEL)

POETE Groupings

Planning:	Organization:	Equipment:	Training:	Exercises:	M & A:
$0.00	$0.00	$51,365.00	$0.00	$5,250.00	$0.00

Expand Solution Area

Expand Disciplines

Export Your Budget Detail Item(s)

Export To Excel

Note from Grantee to OOG

Save Note from Grantee to OOG

Printer Friendly

Previous Save and Continue

3:00 PM

Agency Name: Hays County **Grant/App:** 5242001 **Start Date:** 9/1/2024
Project Title: Hays County Sheriff's Office VIKEN **Status:** Application Pending Submission **End Date:** 8/31/2026 **Fund Source:** HS-Homeland Security Grant Program (HSGP)
Current Program Manager: **Liquidation Date:**
Original Award: $0.00
Current Budget: $56,615.00 **Current Award:** $0.00 **CFDA:** 97.067 **OOG Solicitation:** UASI Austin LETPA Solicitation - FY24 Announcement

Printer Friendly

General Information and Instructions

DHS Project Type

DHS Project Type: Administer and Manage HSGP

Capabilities

Select one Core Capability: Interdiction and Disruption

See the detailed Core Capability descriptions within the National Preparedness Goal

Identify if this investment focuses on building new capabilities or sustaining existing capabilities.

- (●) New Capabilities (Build)
- ( ) Existing Capabilities (Sustain)

Are the assets or activities Deployable or Shareable:

- (●) Deployable
- ( ) Shareable
- ( ) Neither Deployable or Shareable

☐ Check if this Investment requires new construction or renovation, retrofitting, or modification of existing structures

☐ Check if these funds will support a project that was previously funded with HSGP funding

Project Management Step Involved:

Check the step that most closely resembles the phase of the project activities to be completed during the grant period.

Select	Steps	Description	Process
☐	Initiate	The authorization to begin work or resume work on any particular activity.	Involves preparing for, assembling resources and getting work started. May apply to any level, e.g. program, project, phase, activity, task.
☐	Plan	The purpose of establishing, at an early date, the parameters of the project that is going to be worked on as well as to try to delineate any specifics and/or any peculiarities to the project as a whole and/or any specific phases of the project.	Involves working out and extending the theoretical, practical, and/or useful application of an idea, concept, or preliminary design. This also involves a plan for moving a project concept to a viable project.
☑	Execute	The period within the project lifecycle during which the actual work of creating the project's deliverables is carried out.	Involves directing, accomplishing, managing, and completing all phases and aspects of work for a given project.
☐	Control	A mechanism w hich reacts to the current project status in order to ensure accomplishment of project objectives. This involves planning, measuring, monitoring, and taking corrective action based on the results of the monitoring.	Involves exercising corrective action as necessary to yield a required outcome consequent upon monitoring performance. Or, the process of comparing actual performance with planned performance, analyzing variances, evaluating possible alternatives, and taking appropriate corrective action as needed.
☐	Close Out	The completion of all work on a project. Can also refer to completion of a phase of the project.	Involves formally terminating and concluding all tasks, activities, and component parts of a particular project, or phase of a project.

Milestones

List 3 to 5 milestones of this project, and then list the intended completion date for each milestone.

Milestones should occur throughout the project.

Enter dates as MM-DD-YYYY

Milestone	Completion Date	Edit	Delete
Purchase requested equipment	09-01-2024		Delete
Receive Equipment	01-01-2025		Delete

Begin practicing with the equipment	05-05-2025		Delete

Create New Milestone

NIMS Resources

☐ Check if this project supports a NIMS typed resource

Enter the name of the typed resources from the Resource Type Library Tool

Enter the ID of the typed resources from the Resource Type Library Tool

Click to access the Resource Type Library Tool

Note from Grantee to OOG

Save Note from Grantee to OOG

Previous Save and Continue

Save Only

Printer Friendly

2:59 PM

Agency Name: Hays County
Project Title: Hays County Sheriff's Office VIKEN
Grant/App: 5242001
Status: Application Pending Submission
Current Program Manager:
Original Award: $0.00
Current Budget: $56,615.00
Current Award: $0.00
Start Date: 9/1/2024
End Date: 8/31/2026
Liquidation Date:
CFDA: 97.067
Fund Source: HS-Homeland Security Grant Program (HSGP)
OOG Solicitation: UASI Austin LETPA Solicitation - FY24 Announcement

Printer Friendly

NOTICE – 2-HOUR TIMEOUT: This page will timeout after 2 hours of inactivity. You may save your work at any time by clicking the **Save Only** button at the bottom of the page. The system will alert you when there is 15 minutes remaining in your session.

General Information and Instructions

View Introduction

View Single Audits

Fund Source Information and Requirements

Resolution from Governing Body

Applications from nonprofit corporations, local units of governments, and other political subdivisions must include a resolution that contains the following:

1. Authorization by your governing body for the submission of the application to the Public Safety Office (PSO) that clearly identifies the name of the project for which funding is requested;
2. A commitment to provide all applicable matching funds;
3. A designation of the name and/or title of an authorized official who is given the authority to apply for, accept, reject, alter, or terminate a grant (Note: If a name is provided, you must update the PSO should the official change during the grant period.); and
4. A written assurance that, in the event of loss or misuse of grant funds, the governing body will return all funds to PSO.

Upon approval from your agency's governing body, upload the approved resolution to eGrants by going to the **Upload.Files** tab and following the instructions on Uploading eGrants Files.

Contract Compliance

Will PSO grant funds be used to support any contracts for professional services?

Select the appropriate response:

- ○ Yes
- ◉ No

For applicant agencies that selected **Yes** above, describe how you will monitor the activities of the sub-contractor(s) for compliance with the contract provisions (including equipment purchases), deliverables, and all applicable statutes, rules, regulations, and guidelines governing this project.

Enter a description for monitoring contract compliance:

Lobbying

For applicant agencies requesting grant funds in excess of $100,000, have any federally appropriated funds been paid or will be paid to any person for influencing or attempting to influence an officer or employee of any agency, a member of Congress, an officer or employee of Congress, or an employee of a member of Congress in connection with the awarding of any federal contract, the making of any federal grant, the making of any federal loan, the entering into of any cooperative agreement, and the extension, continuation, renewal, amendment, or modification of any federal contract, grant loan, or cooperative agreement?

Select the appropriate response:

- ○ Yes
- ◉ No
- ○ N/A

For applicant agencies that selected either **No** or **N/A** above, have any non-federal funds been paid or will be paid to any person for influencing or attempting to influence an officer or employee of any agency, a member of Congress, an officer or employee of Congress in connection with this federal contract, loan, or cooperative agreement?

- ○ Yes
- ◉ No
- ○ N/A

Fiscal Year

Provide the begin and end date for the applicant agency's fiscal year (e.g., 09/01/20xx to 08/31/20xx).

Enter the Begin Date [mm/dd/yyyy]:

9/1/2024

Enter the End Date [mm/dd/yyyy]:

9/30/2025

Sources of Financial Support

Each applicant must provide the amount of grant funds expended during the most recently completed fiscal year for the following sources:

Enter the amount (in Whole Dollars $) of Federal Grant Funds expended:

42916800

Enter the amount (in Whole Dollars $) of State Grant Funds expended:

0

Single Audit

Applicants who expend less than $750,000 in federal grant funding or less than $750,000 in state grant funding are exempt from the Single Audit Act and cannot charge audit costs to a PSO grant. However, PSO may require a limited scope audit as defined in 2 CFR Part 200, Subpart F - Audit Requirements.

Has the applicant agency expended federal grant funding of $750,000 or more, or state grant funding of $750,000 or more during the most recently completed fiscal year?

Select the appropriate response:

- ○ Yes
- ◉ No

Applicant agencies that selected **Yes** above, provide the date of your organization's last annual single audit, performed by an independent auditor in accordance with the State of Texas Single Audit Circular; or CFR Part 200, Subpart F - Audit Requirements.

Enter the date of your last annual single audit:

3/28/2023

Debarment

Each applicant agency will certify that it and its principals (as defined in 2 CFR Part 180.995):

- Are not presently debarred, suspended, proposed for debarment, declared ineligible, sentenced to a denial of Federal benefits by a State or Federal Court, or voluntarily excluded from participation in this transaction by any federal department or agency;
- Have not within a three-year period preceding this application been convicted of or had a civil judgment rendered against them for commission of fraud or a criminal offense in connection with obtaining, attempting to obtain, or performing a public (federal, state, or local) transaction or contract under a public transaction; violation of federal or state antitrust statutes or commission of embezzlement, theft, forgery, bribery, falsification or destruction of records, making false statements, or receiving stolen property; or
- Are not presently indicted for or otherwise criminally or civilly charged by a governmental entity (federal, state, or local) with commission of any of the offenses enumerated in the above bullet; and have not within a three-year period preceding this application had one or more public transactions (federal, state, or local) terminated for cause or default.

Select the appropriate response:

- ◉ I Certify
- ○ Unable to Certify

Enter the debarment justification:

FFATA Certification

Certification of Recipient Highly Compensated Officers – The Federal Funding Accountability and Transparency Act (FFATA) requires Prime Recipients (HSGD) to report the names and total compensation of each of the five most highly compensated officers (a.k.a. positions) of each sub recipient organization for the most recently completed fiscal year preceding the year in which the grant is awarded if the subrecipient answers **YES** to the **FIRST** statement but **NO** to the **SECOND** statement listed below.

In the sub recipient's preceding completed fiscal year, did the sub recipient receive: (1) 80 percent or more of its annual gross revenue from Federal contracts (and subcontracts), loans, grants (and subgrants) and cooperative agreements; AND (2) $25,000,000 or more in annual gross revenue from Federal contracts (and subcontracts), loans, grants (and subgrants) and cooperative agreements?

- ○ Yes
- ◉ No

Does the public have access to information about the compensation of the senior executives through periodic reports filed under Section 13(a) or 15(d) of the Securities Exchange Act of 1934 (15 U.S.C. 78m(a), 78o(d)) or Section 6104 of the Internal Revenue Code of 1986?

- ○ Yes
- ◉ No

If you answered **YES** to the **FIRST** statement and **NO** to the **SECOND** statement, please provide the name and total compensation amount of each of the five most highly compensated officers (a.k.a. positions) within your agency for the current calendar year. If you answered NO to the first statement you are NOT required to provide the name and compensation amounts. NOTE: "Total compensation" means the complete pay package of each of the sub recipient's compensated officers, including all forms of money, benefits, services, and in-kind payments (see SEC Regulations: 17 CCR 229.402).

Position 1 - Name:

Position 1 - Total Compensation ($):

0

Position 2 - Name:

Position 2 - Total Compensation ($):

0

Position 3 - Name:

Position 3 - Total Compensation ($):

0

Position 4 - Name:

Position 4 - Total Compensation ($):

0

Position 5 - Name:

Position 5 - Total Compensation ($):

0

Note from Grantee to OOG

Save Note from Grantee to OOG

Printer Friendly

Previous

Save Only

Resolution

STATE OF TEXAS §
§
COUNTY OF HAYS §

WHEREAS, The Hays County Commissioners Court finds it in the best interest of the citizens of Hays County, that the Hays County VIKEN X-ray Detection Project be operated in the 2025 year; and

WHEREAS, The Hays County Commissioners Court agrees to provide applicable matching funds for the said project as required by the Office of the Governor, Homeland Security Grant Program, and

WHEREAS, The Hays County Commissioners Court agrees in the event of loss or misuse of the Office of the Governor funds, the Hays County Commissioners Court assures that the funds will be returned to the Office of the Governor in full.

WHEREAS, The Hays County Commissioners Court designates Ruben Becerra, Hays County Judge as the grantee's authorized official. The authorized official is given the power to apply for, accept, reject, alter or terminate the grant on behalf of the applicant agency.

NOW, THEREFORE, BE IT RESOLVED that the Hays County Commissioners Court approves the submission of the grant application for the Hays County VIKEN X-ray Detection Project to the Office of the Governor.

ADOPTED THIS THE 26th DAY of March, 2024

_____
Ruben Becerra
Hays County Judge

Grant Number: 5242001

ATTEST:

_____
Elaine Cardenas
Hays County Clerk

AGENDA ITEM REQUEST FORM: G. 14.

Hays County Commissioners Court

Date: 03/26/2024

Requested By: CRUMLEY/JONES

Sponsor: Judge Becerra

Agenda Item

Authorize the submission of a grant application to the Office of the Governor, Homeland Security Division, Urban Area Security Initiative - Regular Projects in the amount of $7,300.00. **BECERRA/CRUMLEY/JONES**

Summary

If awarded, funds would be used to purchase an additional cargo trailer to support the Buda chapter of Hays County Community Emergency Response Team (CERT). CERT responds to disaster relief sites alongside the Office of Emergency Services. The requested trailer is an enclosed 6'x12' cargo trailer and would hold and transport all necessary CERT equipment and supplies. There is no match requirement for this grant.

Attachments

Resolution
Application

Resolution

STATE OF TEXAS §
§
COUNTY OF HAYS §

WHEREAS, The Hays County Commissioners Court finds it in the best interest of the citizens of Hays County, that the CERT Enhancement Trailer Project be operated in the 2025 year; and

WHEREAS, The Hays County Commissioners Court agrees to provide applicable matching funds for the said project as required by the Office of the Governor, Homeland Security Division, and

WHEREAS, The Hays County Commissioners Court agrees in the event of loss or misuse of the Office of the Governor funds, the Hays County Commissioner's Court assures that the funds will be returned to the Office of the Governor in full.

WHEREAS, The Hays County Commissioners Court designates Ruben Becerra, Hays County Judge as the grantee's authorized official. The authorized official is given the power to apply for, accept, reject, alter or terminate the grant on behalf of the applicant agency.

NOW THEREFORE, BE IT RESOLVED that the Hays County Commissioners Court approves the submission of the grant application for the CERT Enhancement Trailer Project to the Office of the Governor.

ADOPTED THIS THE 26th DAY of MARCH, 2024

_____
Ruben Becerra
Hays County Judge

Grant Number: 5242701

ATTEST:

_____
Elaine Cardenas
Hays County Clerk

Print This Page

Agency Name: Hays County
Grant/App: 5242701 **Start Date:** 10/1/2024 **End Date:** 9/30/2025

Project Title: CERT Enhancement Trailer
Status: Application Pending Submission

Narrative Information

Overview

The purpose of the Homeland Security Grant Program (HSGP) is to support state and local efforts to prevent terrorism and other catastrophic events and to prepare the Nation for the threats and hazards that pose the greatest risk to the security of the United States. HSGP provides funding to implement investments that build, sustain, and deliver the 32 core capabilities essential to achieving the National Preparedness Goal (the Goal) of a secure and resilient Nation. The building, sustainment, and delivery of these core capabilities are not exclusive to any single level of government, organization, or community, but rather, require the combined effort of the whole community. HSGP supports core capabilities across the five mission areas of Prevention, Protection, Mitigation, Response, and Recovery based on allowable costs.

Primary Mission and Purpose

Urban Area Security Initiative (UASI) - Regular: Supports programs that address the unique multidiscipline planning, organization, equipment, training, and exercise needs of high-threat, high-density Urban Areas in efforts to build and sustain the capabilities necessary to prevent, protect against, mitigate, respond to, and recover from acts of terrorism. Urban areas must employ regional approaches to overall preparedness and are encouraged to adopt regional response structures whenever appropriate.

Eligibility Requirements

Cybersecurity Training Requirement
Local units of governments must comply with the Cybersecurity Training requirements described in Section 772.012 and Section 2054.5191 of the Texas Government Code. Local governments determined to not be in compliance with the cybersecurity requirements required by Section 2054.5191 of the Texas Government Code are ineligible for OOG grant funds until the second anniversary of the date the local government is determined ineligible. Government entities must annually certify their compliance with the training requirements using the Cybersecurity Training Certification for State and Local Government. A copy of the Training Certification must be uploaded to your eGrants application. For more information or to access available training programs, visit the Texas Department of Information Resources Statewide Cybersecurity Awareness Training page.

Criminal History Reporting
Entities receiving funds from PSO must be located in a county that has an average of 90% or above on both adult and juvenile dispositions entered into the computerized criminal history database maintained by the Texas Department of Public Safety (DPS) as directed in the *Texas Code of Criminal Procedure, Chapter 66*. The disposition completeness percentage is defined as the percentage of arrest charges a county reports to DPS for which a disposition has been subsequently reported and entered into the computerized criminal history system.

Counties applying for grant awards from the Office of the Governor must commit that the county will report at least 90% of convictions within five business days to the Criminal Justice Information System at the Department of Public Safety.

Uniform Crime Reporting (UCR)
Eligible applicants operating a law enforcement agency must be current on reporting complete UCR data and the Texas specific reporting mandated by 411.042 TGC, to the Texas Department of Public Safety (DPS) for inclusion in the annual Crime in Texas (CIT) publication. To be considered eligible for funding, applicants must have submitted a full twelve months of accurate data to DPS for the most recent calendar year by the deadline(s) established by DPS. Due to the importance of timely reporting, applicants are required to submit complete and accurate UCR data, as well as the Texas-mandated reporting, on a no less than monthly basis and respond promptly to requests from DPS related to the data submitted.

Entities That Collect Sexual Assault/Sex Offense Evidence or Investigate/Prosecute Sexual Assault or Other Sex Offenses
In accordance with Texas Government Code, Section 420.034, any facility or entity that collects evidence for sexual assault or other sex offenses or investigates or prosecutes a sexual assault or other sex offense for which evidence has been collected, must participate in the statewide electronic tracking system developed and implemented by the Texas Department of Public Safety. Visit DPS's Sexual Assault Evidence Tracking Program website for more information or to set up an account to begin participating. Additionally, per Section 420.042 "A law enforcement agency that receives evidence of a sexual assault or other sex offense...shall submit that evidence to a public accredited crime laboratory for analysis no later than the 30th day after the date on which that evidence was received." A law enforcement agency in possession of a significant number of Sexual Assault Evidence Kits (SAEK) where the 30-day window has passed may be considered noncompliant.

National Incident Management System (NIMS) Implementation
Grantees are required to implement NIMS. The NIMS uses a systematic approach to integrate the best existing processes and methods into a unified national framework for incident management across all homeland security activities including prevention, protection, response, mitigation, and recovery. Grantees must use standardized resource management concepts for resource typing, credentialing, and an inventory to facilitate the effective identification, dispatch, deployment, tracking and recovery of resources.

Emergency Management Plans (Intermediate Level)
Cities and counties must have a current emergency management plan or be a legally established member of an inter-jurisdictional emergency management program with a plan on file with the Texas Division of Emergency Management (TDEM). Plans must be maintained throughout the entire grant performance period. If you have questions concerning your Emergency Management Plan (preparedness) level, contact your Emergency Management Coordinator (EMC) or your regional Council of Governments (COG). For questions concerning plan deficiencies, contact TDEM at tdem.plans@tdem.texas.gov.

Program Income

Applicant agrees to comply with all federal and state rules and regulations for program income and agrees to report all program income that is generated as a result of the project's activities. Applicant agrees to report program income through a formal grant adjustment and to secure PSO approval prior to use of the program income. Applicant agrees to use program income for allowable costs and agrees to expend program income immediately after PSO's approval of a grant adjustment and prior to requesting reimbursement of funds.

Deduction Method - Program income shall be deducted from total allowable costs to determine the net allowable costs. Program income shall be used for current costs unless PSO authorizes otherwise. Program income which the grantee did not anticipate at the time of the award shall be used to reduce the PSO award and grantee match rather than to increase the funds committed to the project.

Asset Seizures and Forfeitures - Program income from asset seizures and forfeitures is considered earned when the property has been adjudicated to the benefit of the plaintiff (e.g., law enforcement entity).

Program Requirements

Building and Sustaining Core Capabilities

1. All capabilities being built or sustained must have a clear link to one or more Core Capabilities in the National Preparedness Goal.
2. Many capabilities which support terrorism preparedness simultaneously support preparedness for other hazards. Grantees must demonstrate this dual-use quality for any activities implemented under this program that are not explicitly focused on terrorism preparedness. Activities implemented under SHSP must support terrorism preparedness by building or sustaining capabilities that relate to the prevention of, protection from, mitigation of, response to, and recovery from terrorism.
3. Funding should be used to sustain core capabilities. New capabilities should not be built at the expense of maintaining current and critically needed core capabilities. New capabilities must be aligned with capability targets and gaps identified through the THIRA/SPR process.

Mission Areas

The National Preparedness Goal organizes the core capabilities into the five mission areas:

- Prevention. Prevent, avoid or stop an imminent, threatened or actual act of terrorism.
- Protection. Protect our citizens, residents, visitors, and assets against the greatest threats and hazards in a manner that allows our interests, aspirations, and way of life to thrive.
- Mitigation. Reduce the loss of life and property by lessening the impact of future disasters.
- Response. Respond quickly to save lives, protect property and the environment, and meet basic human needs in the aftermath of a catastrophic incident.
- Recovery. Recover through a focus on the timely restoration, strengthening and revitalization of infrastructure, housing and a sustainable economy, as well as the health, social, cultural, historic and environmental fabric of communities affected by a catastrophic incident.

Nationwide Cyber Security Review

Grantees will be required to complete the Nationwide Cybersecurity Review (NCSR), enabling agencies to benchmark and measure progress of improving their cybersecurity posture. The Chief Information Officer (CIO), Chief Information Security Officer (CISO), or equivalent for each recipient agency should complete the NCSR. If there is no CIO or CISO, the most senior cybersecurity professional should complete the assessment. The NCSR is available at no cost to the user and takes approximately 2-3 hours to complete. For more information about the NCSR, visit: https://www.cisecurity.org/ms-isac/services/ncsr/.

Overall Certification

Each applicant agency must certify to the specific requirements detailed above as well as to comply with all requirements within the PSO Funding Announcement, the *Guide to Grants*, the *Grantee Conditions and Responsibilities*, any authorizing or applicable state and federal statutes and regulations to be eligible for this program.

_ I certify to all of the application content and requirements.

Project Summary :
Briefly summarize the project, including proposed activities and intended impact.
Hays County is seeking funds for the purchase of an enclosed trailer for use by CERT. Hays County CERT is divided into chapters by area. Each chapter responds to disaster and recovery sites in their jurisdiction. Currently the Kyle and Buda chapters of CERT share a single response trailer. Hays County will use funds to purchase a new enclosed 6'x12' cargo trailer for use by the Buda CERT Team. The trailer will be deployed with the CERT Team to response sites in order to assist first responders and residents during situations where evacuation or traffic control is needed. The trailer will carry all equipment and supplies CERT needs when they deploy to a response site allowing for a faster, more efficient response.

Problem Statement :
Provide a detailed account of the issues, threats or hazards that your project will target. For federal Homeland Security Grants, include specific references to the regional or state *Threat and Hazard Identification and Risk Assessment (THIRA)*, as applicable.
This project most closely aligns capability target "Community Resilience" identified on page 22 of the THIRA. The trailer will be deployed to disaster response sites in order to better assist with disaster response and recovery. CERT assists first responder at response sites after disasters like floods and fires. This includes traffic control, assisting with resident evacuations, and basic search duties.

Existing Capability Levels :
Describe the existing capability levels, including resources that are currently in place to support this project prior to the use of grant funds.
Currently the Kyle and Buda chapters of CERT share one trailer. This makes response times to incidents in Buda much slower than is ideal. Additionally, if there are incidents in both Kyla and Buda, CERT has to decided which site receives the support of the CERT Trailer which holds all of the equipment CERT needs to effectively operate.

Capability Gaps:
Describe the capability gaps which will be addressed by the project. For federal Homeland Security Grants, include specific references to the regional or statewide State Preparedness Report (SPR).
The acquisition of this additional trailer will address capability gap "Complete inventory of assets and resources and place in appropriate database or other platform for situational awareness" identified on page 13 of SPR by adding additional assets to the CERT Team and allowing for inventoried items to be split up between the Kyle and Buda teams instead of being housed together in one trailer.

Impact Statement :
Describe the project goals/objectives and how this project will maintain capabilities or reduce capability gaps.
This project seeks to enhance CERT's ability to respond to disasters and offer support to first responders. This will be accomplished by adding additional equipment that can be deployed to response sites and will hold inventory of response supplies for each individual CERT chapter. This will allow disaster response to be faster and more efficient. The sooner the CERT team reaches a disaster response site, the sooner they are able to begin offering assistance to both first responders and residents.

Homeland Security Priority Actions:
Identify the Texas Homeland Security Priority Action most closely aligned with this project. Each Priority Action is linked with an *Objective from the Texas Homeland Security Strategic Plan (HSSP)*. List the Priority Action by number and text (e.g. *1.2.3 Expand and enhance the network of human sources that can provide detailed and relevant information on known or suspected terrorist and criminal enterprises*.)
4.1.1 "Strengthen the state's regionally focused, multi-discipline, all hazards response system that ensures each region statewide has access to the necessary response teams and resources, to include enhancement of resource request and mutual aid processes. " indented on page 66 of the Texas HSSP.

Target Group :
Identify the target group and population expected to benefit from this project.
The direct beneficiaries of this project will be the Hays County CERT Team, particularly the Kyle and Buda chapters. This will offer additional benefits to first responding agencies that CERT assists after disasters.

Long-Term Approach:
Describe how the applicant agency will maintain the capabilities supported by this project without additional federal or state funds. If sustainment is dependent upon federal or state grants, describe the ongoing need for

future grants, as applicable.
This is a one time purchase. maintenance of the trailer will be handled by the Hays County Office of Emergency Services.

You are logged in as **User Name**: scorprew

Print This Page

Agency Name: Hays County
Grant/App: 5242701 **Start Date:** 10/1/2024 **End Date:** 9/30/2025

Project Title: CERT Enhancement Trailer
Status: Application Pending Submission

Project Activities Information

HSGP Instructions for Project Activity Selection

Homeland Security Grant Program (HSGP) applicants should only select one project activity. The eGrants system will allow multiple selections, but each HSGP subrecipient project must fit into one and only one of the Investment Categories that are listed as project activities under the "Activity List".

Urban Area Impact

Identify the Urban Area Strategic Plan Goal and Objective that most closely aligns with this project. List the Goal/Objective specific to your Urban Area Strategic Plan by number and text *(e.g., Goal 5: Interoperable Communications. Sustain standards-based, shared systems with adequate coverage and capacity to facilitate seamless interoperable communications throughout the Urban Area. Objective 2: Complete the deployment of standards-based shared systems to serve the region.)*

Selected Project Activities:

ACTIVITY	PERCENTAGE:	DESCRIPTION
Community Preparedness and Resilience	100.00	Equipment will support the CERT Team and will enhance community resilience efforts

You are logged in as **User Name**: scorprew

Print This Page

Agency Name: Hays County
Grant/App: 5242701 **Start Date:** 10/1/2024 **End Date:** 9/30/2025

Project Title: CERT Enhancement Trailer
Status: Application Pending Submission

Measures Information

Objective Output Measures

OUTPUT MEASURE	TARGET LEVEL
Number of community preparedness (CCP, CERT or other similar agency sponsored programs) events held.	6
Number of exercises conducted.	4
Number of individuals participating in exercises.	20
Number of people trained.	
Number of planning/coordination meetings attended.	2
Number of planning/coordination meetings conducted (including whole community as appropriate).	1
Number of plans developed or updated.	
Number of plans reviewed.	
Number of trainings conducted.	

Objective Outcome Measures

OUTCOME MEASURE	TARGET LEVEL
Number of people participating in community preparedness events.	100
Number of stakeholders participating in planning/coordination meetings.	10

Custom Output Measures

CUSTOM OUTPUT MEASURE	TARGET LEVEL

Custom Outcome Measures

CUSTOM OUTCOME MEASURE	TARGET LEVEL

You are logged in as **User Name**: scorprew

Print This Page

Agency Name: Hays County
Grant/App: 5242701 **Start Date:** 10/1/2024 **End Date:** 9/30/2025

Project Title: CERT Enhancement Trailer
Status: Application Pending Submission

Budget Details Information

Budget Information by Budget Line Item:

CATEGORY	SUB CATEGORY	DESCRIPTION	OOG	CASH MATCH	IN-KIND MATCH	GPI	TOTAL	UNIT/%
Equipment	12TR-00-TEQP Trailer, Equipment	6'x12' enclosed cargo trailer with ramp and side door for the Buda CERT Chapter. Trailer will hold and transport all CERT equipment to response sites. Also included is costs for graphics on the trailer.	$5,800.00	$0.00	$0.00	$0.00	$5,800.00	1
Supplies and Direct Operating Expenses	21GN-00-CCEQ Equipment, Citizen Corps	CERT supplies to outfit the trailer including CERT backpacks and basic response supplies such as flashlights, first aid kits, etc.	$1,500.00	$0.00	$0.00	$0.00	$1,500.00	0

You are logged in as **User Name**: scorprew

AGENDA ITEM REQUEST FORM: G. 15.

Hays County Commissioners Court

Date: 03/26/2024

Requested By: CRUMLEY/JONES

Sponsor: Judge Becerra

Agenda Item

Authorize the submission of a grant application to the Office of the Governor, Homeland Security Division, Urban Area Security Initiative - Regular Projects in the amount of $50,755.10. **BECERRA/CRUMLEY/JONES**

Summary

If awarded, funds would support the purchase of a surveillance trailer. This is an upright device with a solar fuel cell battery and two camera attachments. The trailer is on wheels and can be deployed to sites where it is needed. The trailer will primarily be used in disaster response coordination efforts, but will also be used for security at high-traffic election sites to support law enforcement officers. There is no match required.

Attachments

Resolution
Application

Resolution

STATE OF TEXAS §
§
COUNTY OF HAYS §

WHEREAS, The Hays County Commissioners Court finds it in the best interest of the citizens of Hays County, that the Hays County Surveillance Trailer Project be operated in the 2025 year; and

WHEREAS, The Hays County Commissioners Court agrees to provide applicable matching funds for the said project as required by the Office of the Governor, Homeland Security Division, and

WHEREAS, The Hays County Commissioners Court agrees in the event of loss or misuse of the Office of the Governor funds, the Hays County Commissioner's Court assures that the funds will be returned to the Office of the Governor in full.

WHEREAS, The Hays County Commissioners Court designates Ruben Becerra, Hays County Judge as the grantee's authorized official. The authorized official is given the power to apply for, accept, reject, alter or terminate the grant on behalf of the applicant agency.

NOW THEREFORE, BE IT RESOLVED that the Hays County Commissioners Court approves the submission of the grant application for the Hays County Surveillance Trailer Project to the Office of the Governor.

ADOPTED THIS THE 26th DAY of MARCH, 2024

_____
Ruben Becerra
Hays County Judge

Grant Number: 5242601

ATTEST:

_____
Elaine Cardenas
Hays County Clerk

Print This Page

Agency Name: Hays County
Grant/App: 5242601 **Start Date:** 10/1/2024 **End Date:** 9/30/2025

Project Title: Hays County Surveillance Trailer
Status: Application Pending Submission

Narrative Information

Overview

The purpose of the Homeland Security Grant Program (HSGP) is to support state and local efforts to prevent terrorism and other catastrophic events and to prepare the Nation for the threats and hazards that pose the greatest risk to the security of the United States. HSGP provides funding to implement investments that build, sustain, and deliver the 32 core capabilities essential to achieving the National Preparedness Goal (the Goal) of a secure and resilient Nation. The building, sustainment, and delivery of these core capabilities are not exclusive to any single level of government, organization, or community, but rather, require the combined effort of the whole community. HSGP supports core capabilities across the five mission areas of Prevention, Protection, Mitigation, Response, and Recovery based on allowable costs.

Primary Mission and Purpose

Urban Area Security Initiative (UASI) - Regular: Supports programs that address the unique multidiscipline planning, organization, equipment, training, and exercise needs of high-threat, high-density Urban Areas in efforts to build and sustain the capabilities necessary to prevent, protect against, mitigate, respond to, and recover from acts of terrorism. Urban areas must employ regional approaches to overall preparedness and are encouraged to adopt regional response structures whenever appropriate.

Eligibility Requirements

Cybersecurity Training Requirement
Local units of governments must comply with the Cybersecurity Training requirements described in Section 772.012 and Section 2054.5191 of the Texas Government Code. Local governments determined to not be in compliance with the cybersecurity requirements required by Section 2054.5191 of the Texas Government Code are ineligible for OOG grant funds until the second anniversary of the date the local government is determined ineligible. Government entities must annually certify their compliance with the training requirements using the Cybersecurity Training Certification for State and Local Government. A copy of the Training Certification must be uploaded to your eGrants application. For more information or to access available training programs, visit the Texas Department of Information Resources Statewide Cybersecurity Awareness Training page.

Criminal History Reporting
Entities receiving funds from PSO must be located in a county that has an average of 90% or above on both adult and juvenile dispositions entered into the computerized criminal history database maintained by the Texas Department of Public Safety (DPS) as directed in the *Texas Code of Criminal Procedure, Chapter 66*. The disposition completeness percentage is defined as the percentage of arrest charges a county reports to DPS for which a disposition has been subsequently reported and entered into the computerized criminal history system.

Counties applying for grant awards from the Office of the Governor must commit that the county will report at least 90% of convictions within five business days to the Criminal Justice Information System at the Department of Public Safety.

Uniform Crime Reporting (UCR)
Eligible applicants operating a law enforcement agency must be current on reporting complete UCR data and the Texas specific reporting mandated by 411.042 TGC, to the Texas Department of Public Safety (DPS) for inclusion in the annual Crime in Texas (CIT) publication. To be considered eligible for funding, applicants must have submitted a full twelve months of accurate data to DPS for the most recent calendar year by the deadline(s) established by DPS. Due to the importance of timely reporting, applicants are required to submit complete and accurate UCR data, as well as the Texas-mandated reporting, on a no less than monthly basis and respond promptly to requests from DPS related to the data submitted.

Entities That Collect Sexual Assault/Sex Offense Evidence or Investigate/Prosecute Sexual Assault or Other Sex Offenses
In accordance with Texas Government Code, Section 420.034, any facility or entity that collects evidence for sexual assault or other sex offenses or investigates or prosecutes a sexual assault or other sex offense for which evidence has been collected, must participate in the statewide electronic tracking system developed and implemented by the Texas Department of Public Safety. Visit DPS's Sexual Assault Evidence Tracking Program website for more information or to set up an account to begin participating. Additionally, per Section 420.042 "A law enforcement agency that receives evidence of a sexual assault or other sex offense...shall submit that evidence to a public accredited crime laboratory for analysis no later than the 30th day after the date on which that evidence was received." A law enforcement agency in possession of a significant number of Sexual Assault Evidence Kits (SAEK) where the 30-day window has passed may be considered noncompliant.

National Incident Management System (NIMS) Implementation
Grantees are required to implement NIMS. The NIMS uses a systematic approach to integrate the best existing processes and methods into a unified national framework for incident management across all homeland security activities including prevention, protection, response, mitigation, and recovery. Grantees must use standardized resource management concepts for resource typing, credentialing, and an inventory to facilitate the effective identification, dispatch, deployment, tracking and recovery of resources.

Emergency Management Plans (Intermediate Level)
Cities and counties must have a current emergency management plan or be a legally established member of an inter-jurisdictional emergency management program with a plan on file with the Texas Division of Emergency Management (TDEM). Plans must be maintained throughout the entire grant performance period. If you have questions concerning your Emergency Management Plan (preparedness) level, contact your Emergency Management Coordinator (EMC) or your regional Council of Governments (COG). For questions concerning plan deficiencies, contact TDEM at tdem.plans@tdem.texas.gov.

Program Income

Applicant agrees to comply with all federal and state rules and regulations for program income and agrees to report all program income that is generated as a result of the project's activities. Applicant agrees to report program income through a formal grant adjustment and to secure PSO approval prior to use of the program income. Applicant agrees to use program income for allowable costs and agrees to expend program income immediately after PSO's approval of a grant adjustment and prior to requesting reimbursement of funds.

Deduction Method - Program income shall be deducted from total allowable costs to determine the net allowable costs. Program income shall be used for current costs unless PSO authorizes otherwise. Program income which the grantee did not anticipate at the time of the award shall be used to reduce the PSO award and grantee match rather than to increase the funds committed to the project.

Asset Seizures and Forfeitures - Program income from asset seizures and forfeitures is considered earned when the property has been adjudicated to the benefit of the plaintiff (e.g., law enforcement entity).

Program Requirements

Building and Sustaining Core Capabilities

1. All capabilities being built or sustained must have a clear link to one or more Core Capabilities in the National Preparedness Goal.
2. Many capabilities which support terrorism preparedness simultaneously support preparedness for other hazards. Grantees must demonstrate this dual-use quality for any activities implemented under this program that are not explicitly focused on terrorism preparedness. Activities implemented under SHSP must support terrorism preparedness by building or sustaining capabilities that relate to the prevention of, protection from, mitigation of, response to, and recovery from terrorism.
3. Funding should be used to sustain core capabilities. New capabilities should not be built at the expense of maintaining current and critically needed core capabilities. New capabilities must be aligned with capability targets and gaps identified through the THIRA/SPR process.

Mission Areas

The National Preparedness Goal organizes the core capabilities into the five mission areas:

- Prevention. Prevent, avoid or stop an imminent, threatened or actual act of terrorism.
- Protection. Protect our citizens, residents, visitors, and assets against the greatest threats and hazards in a manner that allows our interests, aspirations, and way of life to thrive.
- Mitigation. Reduce the loss of life and property by lessening the impact of future disasters.
- Response. Respond quickly to save lives, protect property and the environment, and meet basic human needs in the aftermath of a catastrophic incident.
- Recovery. Recover through a focus on the timely restoration, strengthening and revitalization of infrastructure, housing and a sustainable economy, as well as the health, social, cultural, historic and environmental fabric of communities affected by a catastrophic incident.

Nationwide Cyber Security Review

Grantees will be required to complete the Nationwide Cybersecurity Review (NCSR), enabling agencies to benchmark and measure progress of improving their cybersecurity posture. The Chief Information Officer (CIO), Chief Information Security Officer (CISO), or equivalent for each recipient agency should complete the NCSR. If there is no CIO or CISO, the most senior cybersecurity professional should complete the assessment. The NCSR is available at no cost to the user and takes approximately 2-3 hours to complete. For more information about the NCSR, visit: https://www.cisecurity.org/ms-isac/services/ncsr/.

Overall Certification

Each applicant agency must certify to the specific requirements detailed above as well as to comply with all requirements within the PSO Funding Announcement, the *Guide to Grants*, the *Grantee Conditions and Responsibilities*, any authorizing or applicable state and federal statutes and regulations to be eligible for this program.

_ I certify to all of the application content and requirements.

Project Summary :
Briefly summarize the project, including proposed activities and intended impact.
Hays County proposes to use funding for the purchase of a WCCTV surveillance trailer that can be deployed during disasters for response purpose and can also be used at large scale community events to support security initiatives. The WCCTV Trailer is an upright mobile device with a solar fuel cell battery and a four camera attachment bracket. The trailer includes one mini dome camera and one secondary Multi Sensor camera. The mini dome camera has an illumination range of 650 ft and is 4G LTE capable. the secondary Multi Sensor camera has a 360 degree view point. The trailer takes approximately 6 minutes to set-up and become fully operational (including attaching the cameras) once it reaches its destination.

Problem Statement :
Provide a detailed account of the issues, threats or hazards that your project will target. For federal Homeland Security Grants, include specific references to the regional or state *Threat and Hazard Identification and Risk Assessment (THIRA)*, as applicable.
The acquisition of the surveillance trailer aims to address several problems faced by Hays County. Because the trailer will be deployed to response sites, the project will address capability target "On-Scene Security, Protection, and Law Enforcement" on page 31 of the THIRA. The trailer will be used to enhance security at high-traffic election sites. The trailer will provide additional surveillance with a wide view point at these sites. The voice down capability of this trailer allows for either live or pre-recorded messages to be delivered from the trailer. This assists with deterring crime as messages can be delivered when activity is detected whether or not an officer is physically present. Additionally, this capability aligns with target "Operational Coordination" on page 13 of the THIRA and "Operational Communication" on page 61. The voice down communication allows for collaboration between various first responding agencies at disaster response sites.

Existing Capability Levels :
Describe the existing capability levels, including resources that are currently in place to support this project prior to the use of grant funds.
Currently, Hays County does not have a piece of equipment similar to this. The Office of Emergency Services has a command unit that is equipped with cameras, but the vehicle is large and is not always the best solution for areas needing surveillance or disaster relief sites. Additionally, the current equipment does not have the voice down communication feature.

Capability Gaps:
Describe the capability gaps which will be addressed by the project. For federal Homeland Security Grants, include specific references to the regional or statewide State Preparedness Report (SPR).
This project seeks to address the capability gap "Support local law enforcement offices in the maintenance of adequate equipment to support this capability" identified on page 60 of the SPR under the target "On-Scene Security, Protection, and Law Enforcement". Additionally, it will address the gap "Implement maintenance and/or updates/replacement of communications equipment" identified on page 63 of the SPR under target "Operational Communications".

Impact Statement :
Describe the project goals/objectives and how this project will maintain capabilities or reduce capability gaps.
The purchase of the WCCTV will maintain the named capabilities by providing assistance to law enforcement during large scale community events and high-traffic elections. The surveillance trailer will provide both security enhancements as well as support for law enforcement officers. Additionally, it will maintain and enhance operational communications by providing first responders with additional communications and surveillance equipment to be used at response sites.

Homeland Security Priority Actions:
Identify the Texas Homeland Security Priority Action most closely aligned with this project. Each Priority Action is linked with an *Objective from the Texas Homeland Security Strategic Plan (HSSP)*. List the Priority Action by number and text (e.g. *1.2.3 Expand and enhance the network of human sources that can provide detailed and relevant information on known or suspected terrorist and criminal enterprises*.)
This project most closely addresses priority action 4.2.4 "Make investments in personnel, training, and equipment to build new response team capabilities where possible, based on assessments of needs" identified on page 69 of the Texas HSSP.

Target Group :
Identify the target group and population expected to benefit from this project.

The target group benefitting from this project would be first responder and law enforcement agencies across Hays County. Because this equipment will be deployed to various sites across the county, there are multiple benefitting agencies. This project also seeks to increase communication and response efficiency between Emergency Services and first responders.

Long-Term Approach:
Describe how the applicant agency will maintain the capabilities supported by this project without additional federal or state funds. If sustainment is dependent upon federal or state grants, describe the ongoing need for future grants, as applicable.
This project is a one time purchase that will not require future grant funding. The equipment will become the property of Hays County and the Office of Emergency Services will cover costs of any repairs or maintenance that is required.

You are logged in as **User Name**: scorprew

Print This Page

Agency Name: Hays County
Grant/App: 5242601 **Start Date:** 10/1/2024 **End Date:** 9/30/2025

Project Title: Hays County Surveillance Trailer
Status: Application Pending Submission

Project Activities Information

HSGP Instructions for Project Activity Selection

Homeland Security Grant Program (HSGP) applicants should only select one project activity. The eGrants system will allow multiple selections, but each HSGP subrecipient project must fit into one and only one of the Investment Categories that are listed as project activities under the "Activity List".

Urban Area Impact

Identify the Urban Area Strategic Plan Goal and Objective that most closely aligns with this project. List the Goal/Objective specific to your Urban Area Strategic Plan by number and text *(e.g., Goal 5: Interoperable Communications. Sustain standards-based, shared systems with adequate coverage and capacity to facilitate seamless interoperable communications throughout the Urban Area. Objective 2: Complete the deployment of standards-based shared systems to serve the region.)*

Selected Project Activities:

ACTIVITY	PERCENTAGE:	DESCRIPTION
Enhancing Election Security	10.00	Will provide security at high-traffic elections sites.
Support of First Responder Capabilities	90.00	The Surveillance trailer will assist first responders with equipment needs and provide them with necessary resources to protect against terrorism and similar incidents

You are logged in as **User Name**: scorprew

Print This Page

Agency Name: Hays County
Grant/App: 5242601 **Start Date:** 10/1/2024 **End Date:** 9/30/2025

Project Title: Hays County Surveillance Trailer
Status: Application Pending Submission

Measures Information

Objective Output Measures

OUTPUT MEASURE	TARGET LEVEL
Number of exercises conducted.	
Number of individuals participating in exercises.	
Number of networks/systems protected with new grant-funded equipment, hardware or software	
Number of people trained.	10
Number of planning/coordination meetings attended.	
Number of planning/coordination meetings conducted (including whole community as appropriate).	
Number of plans developed or updated.	
Number of risk assessments conducted.	
Number of Special Response Team personnel provided with new or updated equipment.	1
Number of Special Response Teams created, maintained or enhanced.	1
Number of trainings conducted.	3

Objective Outcome Measures

OUTCOME MEASURE	TARGET LEVEL

Number of critical infrastructure facilities hardened.	
Number of individuals from stakeholder organizations participating in planning/coordination meetings.	15
Number of stakeholders participating in planning/coordination meetings.	5

Custom Output Measures

CUSTOM OUTPUT MEASURE	TARGET LEVEL

Custom Outcome Measures

CUSTOM OUTCOME MEASURE	TARGET LEVEL

You are logged in as **User Name**: scorprew

Print This Page

Agency Name: Hays County
Grant/App: 5242601 **Start Date:** 10/1/2024 **End Date:** 9/30/2025

Project Title: Hays County Surveillance Trailer
Status: Application Pending Submission

Budget Details Information

Budget Information by Budget Line Item:

CATEGORY	SUB CATEGORY	DESCRIPTION	OOG	CASH MATCH	IN-KIND MATCH	GPI	TOTAL	UNIT/%
Equipment	03OE-01-CTAC Device, Tactical Communications	Voice Down box for communication capabilities	$1,595.00	$0.00	$0.00	$0.00	$1,595.00	1
Equipment	06CC-04-EQSD Equipment, Satellite Data	FirstNet Equipment Addition for Mini Dome camera	$1,998.95	$0.00	$0.00	$0.00	$1,998.95	1
Equipment	13LE-00-SURV Equipment, Law Enforcement Surveillance	WCCTV Surveillance trailer including Mini Dome+ camera, Hard Disk Drive, Secondary multisensor camera, 750w Trailer Battery, tilting drawbar and 4 camera bracket	$37,561.15	$0.00	$0.00	$0.00	$37,561.15	1
Supplies and Direct Operating Expenses	21GN-00-SHIP Shipping	Shipping and Installation	$2,000.00	$0.00	$0.00	$0.00	$2,000.00	0
Supplies and Direct Operating Expenses	Vehicle Operating Cost (e.g., fuel, lubricants, maintenance, storage) (Training)	3 year Warranty, support and training for trailer	$7,600.00	$0.00	$0.00	$0.00	$7,600.00	0

You are logged in as **User Name**: scorprew

Print This Page

Agency Name: Hays County
Grant/App: 5242601 **Start Date:** 10/1/2024 **End Date:** 9/30/2025

Project Title: Hays County Surveillance Trailer
Status: Application Pending Submission

Homeland Security Information

FUND SOURCE INFORMATION AND REQUIREMENTS

DHS Project Type: Establish/enhance regional response teams

Capabilities

Core Capability: On-scene Security, Protection, and Law Enforcement

Identify if this investment focuses on building new capabilities or sustaining existing capabilities. : New Capabilities (Build)

Are the assets or activities Deployable or Shareable: Deployable

___ Check if this Investment requires new construction or renovation, retrofitting, or modification of existing structures

___ Check if these funds will support a project that was previously funded with HSGP funding

Project Management Step Involved:

Check the step that most closely resembles the phase of the project activities to be completed during the grant period.

Step:

Description:

Process:

Milestones

Milestone: Purchase equipment; **Completion Date:** 12-01-2024
Milestone: Receive Equipment; **Completion Date:** 03-01-2025
Milestone: Train County Staff to sue equipment; **Completion Date:** 04-01-2025
Milestone: Coordination meetings with other agencies to itnegrate equipment into response; **Completion Date:** 06-30-2025

NIMS Resources

___ Check if this project supports a NIMS typed resource

Enter the name of the typed resources from the Resource Type Library Tool:

Enter the ID of the typed resources from the Resource Type Library Tool:

You are logged in as **User Name**: scorprew

AGENDA ITEM REQUEST FORM: G. 16.

Hays County Commissioners Court

Date: 03/26/2024

Requested By: CRUMLEY/CUTLER

Sponsor: Commissioner Ingalsbe

Agenda Item

Authorize the submission of a grant application to the Office of the Governor, Homeland Security Division, Urban Area Security Initiative - Law Enforcement Terrorism Prevention Act Projects in the amount of $582,900.00. **INGALSBE/CRUMLEY/CUTLER**

Summary

If awarded, funds would support the purchase of the ROOK, an armored tactical vehicle that would be used by the Hays County SWAT Team. The ROOK has uses for SWAT operation and response, but also features attachments that will aid the county in debris clean-up after disasters such as floods or fires. Currently, only one other agency in the CAPCOG region has a ROOK that can be used for operations. By acquiring a ROOK for Hays County, it will also become a regional, deployable asset. There is no match required for this grant.

Attachments

Resolution
Application

Resolution

STATE OF TEXAS §
§
COUNTY OF HAYS §

WHEREAS, The Hays County Commissioners Court finds it in the best interest of the citizens of Hays County, that the ROOK Tactical Vehicle Project be operated in the 2025 year; and

WHEREAS, The Hays County Commissioners Court agrees to provide applicable matching funds for the said project as required by the Office of the Governor, Homeland Security Division and

WHEREAS, The Hays County Commissioners Court agrees in the event of loss or misuse of the Office of the Governor funds, the Hays County Commissioners Court assures that the funds will be returned to the Office of the Governor in full.

WHEREAS, The Hays County Commissioners Court designates Ruben Becerra, Hays County Judge as the grantee's authorized official. The authorized official is given the power to apply for, accept, reject, alter or terminate the grant on behalf of the applicant agency.

NOW THEREFORE, BE IT RESOLVED that the Hays County Commissioners Court approves the submission of the grant application for the ROOK Tactical Vehicle Project to the Office of the Governor.

ADOPTED THIS THE 26th DAY of MARCH, 2024

_____
Ruben Becerra
Hays County Judge

Grant Number: 5242201

ATTEST:

_____
Elaine Cardenas
Hays County Clerk

Print This Page

Agency Name: Hays County
Grant/App: 5242201 **Start Date:** 10/1/2024 **End Date:** 9/30/2025

Project Title: ROOK Tactical Vehicle
Status: Application Pending Submission

Narrative Information

Overview

The purpose of the Homeland Security Grant Program (HSGP) is to support state and local efforts to prevent terrorism and other catastrophic events and to prepare the Nation for the threats and hazards that pose the greatest risk to the security of the United States. HSGP provides funding to implement investments that build, sustain, and deliver the 32 core capabilities essential to achieving the National Preparedness Goal (the Goal) of a secure and resilient Nation. The building, sustainment, and delivery of these core capabilities are not exclusive to any single level of government, organization, or community, but rather, require the combined effort of the whole community. HSGP supports core capabilities across the five mission areas of Prevention, Protection, Mitigation, Response, and Recovery based on allowable costs.

Primary Mission and Purpose

Urban Area Security Initiative (UASI) - Law Enforcement Terrorism Prevention Activities (LETPA): Supports programs that address the unique multidiscipline planning, organization, equipment, training, and exercise needs of high-threat, high-density Urban Areas in efforts to build and sustain law enforcement capabilities to prevent terrorist attacks and support critical prevention and protection activities. Urban areas must employ regional approaches to overall preparedness.

Eligibility Requirements

Cybersecurity Training Requirement
Local units of governments must comply with the Cybersecurity Training requirements described in Section 772.012 and Section 2054.5191 of the Texas Government Code. Local governments determined to not be in compliance with the cybersecurity requirements required by Section 2054.5191 of the Texas Government Code are ineligible for OOG grant funds until the second anniversary of the date the local government is determined ineligible. Government entities must annually certify their compliance with the training requirements using the Cybersecurity Training Certification for State and Local Government. A copy of the Training Certification must be uploaded to your eGrants application. For more information or to access available training programs, visit the Texas Department of Information Resources Statewide Cybersecurity Awareness Training page.

Criminal History Reporting
Entities receiving funds from PSO must be located in a county that has an average of 90% or above on both adult and juvenile dispositions entered into the computerized criminal history database maintained by the Texas Department of Public Safety (DPS) as directed in the *Texas Code of Criminal Procedure, Chapter 66*. The disposition completeness percentage is defined as the percentage of arrest charges a county reports to DPS for which a disposition has been subsequently reported and entered into the computerized criminal history system.

Counties applying for grant awards from the Office of the Governor must commit that the county will report at least 90% of convictions within five business days to the Criminal Justice Information System at the Department of Public Safety.

Uniform Crime Reporting (UCR)
Eligible applicants operating a law enforcement agency must be current on reporting complete UCR data and the Texas specific reporting mandated by 411.042 TGC, to the Texas Department of Public Safety (DPS) for inclusion in the annual Crime in Texas (CIT) publication. To be considered eligible for funding, applicants must have submitted a full twelve months of accurate data to DPS for the most recent calendar year by the deadline(s) established by DPS. Due to the importance of timely reporting, applicants are required to submit complete and accurate UCR data, as well as the Texas-mandated reporting, on a no less than monthly basis and respond promptly to requests from DPS related to the data submitted.

Entities That Collect Sexual Assault/Sex Offense Evidence or Investigate/Prosecute Sexual Assault or Other Sex Offenses
In accordance with Texas Government Code, Section 420.034, any facility or entity that collects evidence for sexual assault or other sex offenses or investigates or prosecutes a sexual assault or other sex offense for which evidence has been collected, must participate in the statewide electronic tracking system developed and implemented by the Texas Department of Public Safety. Visit DPS's Sexual Assault Evidence Tracking Program website for more information or to set up an account to begin participating. Additionally, per Section 420.042 "A law enforcement agency that receives evidence of a sexual assault or other sex offense...shall submit that evidence to a public accredited crime laboratory for analysis no later than the 30th day after the date on which that evidence was received." A law enforcement agency in possession of a significant number of Sexual Assault Evidence Kits (SAEK) where the 30-day window has passed may be considered noncompliant.

National Incident Management System (NIMS) Implementation
Grantees are required to implement NIMS. The NIMS uses a systematic approach to integrate the best existing processes and methods into a unified national framework for incident management across all homeland security activities including prevention, protection, response, mitigation, and recovery. Grantees must use standardized resource management concepts for resource typing, credentialing, and an inventory to facilitate the effective identification, dispatch, deployment, tracking and recovery of resources.

Emergency Management Plans (Intermediate Level)
Cities and counties must have a current emergency management plan or be a legally established member of an inter-jurisdictional emergency management program with a plan on file with the Texas Division of Emergency Management (TDEM). Plans must be maintained throughout the entire grant performance period. If you have questions concerning your Emergency Management Plan (preparedness) level, contact your Emergency Management Coordinator (EMC) or your regional Council of Governments (COG). For questions concerning plan deficiencies, contact TDEM at tdem.plans@tdem.texas.gov.

Program Income

Applicant agrees to comply with all federal and state rules and regulations for program income and agrees to report all program income that is generated as a result of the project's activities. Applicant agrees to report program income through a formal grant adjustment and to secure PSO approval prior to use of the program income. Applicant agrees to use program income for allowable costs and agrees to expend program income immediately after PSO's approval of a grant adjustment and prior to requesting reimbursement of funds.

Deduction Method - Program income shall be deducted from total allowable costs to determine the net allowable costs. Program income shall be used for current costs unless PSO authorizes otherwise. Program income which the grantee did not anticipate at the time of the award shall be used to reduce the PSO award and grantee match rather than to increase the funds committed to the project.

Asset Seizures and Forfeitures - Program income from asset seizures and forfeitures is considered earned when the property has been adjudicated to the benefit of the plaintiff (e.g., law enforcement entity).

Program Requirements

Building and Sustaining Core Capabilities

1. All capabilities being built or sustained must have a clear link to one or more Core Capabilities in the National Preparedness Goal.
2. Many capabilities which support terrorism preparedness simultaneously support preparedness for other hazards. Grantees must demonstrate this dual-use quality for any activities implemented under this program that are not explicitly focused on terrorism preparedness. Activities implemented under SHSP must support terrorism preparedness by building or sustaining capabilities that relate to the prevention of, protection from, mitigation of, response to, and recovery from terrorism.
3. Funding should be used to sustain core capabilities. New capabilities should not be built at the expense of maintaining current and critically needed core capabilities. New capabilities must be aligned with capability targets and gaps identified through the THIRA/SPR process.

Mission Areas

The National Preparedness Goal organizes the core capabilities into the five mission areas:

- Prevention. Prevent, avoid or stop an imminent, threatened or actual act of terrorism.
- Protection. Protect our citizens, residents, visitors, and assets against the greatest threats and hazards in a manner that allows our interests, aspirations, and way of life to thrive.
- Mitigation. Reduce the loss of life and property by lessening the impact of future disasters.
- Response. Respond quickly to save lives, protect property and the environment, and meet basic human needs in the aftermath of a catastrophic incident.
- Recovery. Recover through a focus on the timely restoration, strengthening and revitalization of infrastructure, housing and a sustainable economy, as well as the health, social, cultural, historic and environmental fabric of communities affected by a catastrophic incident.

Nationwide Cyber Security Review

Grantees will be required to complete the Nationwide Cybersecurity Review (NCSR), enabling agencies to benchmark and measure progress of improving their cybersecurity posture. The Chief Information Officer (CIO), Chief Information Security Officer (CISO), or equivalent for each recipient agency should complete the NCSR. If there is no CIO or CISO, the most senior cybersecurity professional should complete the assessment. The NCSR is available at no cost to the user and takes approximately 2-3 hours to complete. For more information about the NCSR, visit: https://www.cisecurity.org/ms-isac/services/ncsr/.

LETPA

Law Enforcement Terrorism Prevention Activities (LETPA)
The state is responsible for ensuring that at least 35 percent (35%) of the combined HSGP funds allocated under SHSP and UASI are dedicated towards law enforcement terrorism prevention activities, as defined in 6 U.S.C. 607.

Grant projects must be consistent with the Federal Emergency Management Agency (FEMA) Information Bulletin (IB) 412 which discusses eligible activities outlined in:

a. The National Prevention Framework;
b. The National Protection Framework where capabilities are shared with the prevention mission area;
c. Section 2006 of the Homeland Security Act of 2002, as amended; and
d. The FY 2007 Homeland Security Grant Program Guidance and Application Kit.

Activities eligible for use of LETPA focused funds include but are not limited to: Maturation and enhancement of designated state and major Urban Area fusion centers, including information sharing and analysis, threat recognition, terrorist interdiction, and training/hiring of intelligence analysts. Coordination between fusion centers and other analytical and investigative efforts. Implementation and maintenance of the Nationwide Suspicious Activity Reporting (SAR) Initiative. Implementation of the "If You See Something, Say Something" campaign to raise public awareness of indicators of terrorism and terrorism-related crime and associated efforts to increase the sharing of information with public and private sector partners. Increased physical security, through law enforcement personnel and other protective measures, by implementing preventative and protective measures at critical infrastructure sites or at-risk nonprofit organizations.

Overall Certification

Each applicant agency must certify to the specific requirements detailed above as well as to comply with all requirements within the PSO Funding Announcement, the *Guide to Grants*, the *Grantee Conditions and Responsibilities*, any authorizing or applicable state and federal statutes and regulations to be eligible for this program.
_ I certify to all of the application content and requirements.

Project Summary :
Briefly summarize the project, including proposed activities and intended impact.
Hays County is seeking funding for the purchase of the "ROOK," a specialized armored vehicle known as the Ring Power Tactical Solutions Armored Vehicle. This custom vehicle aims to bolster the safety of citizens, officers, and emergency first responders while streamlining the response efforts for critical incidents. Identified as a crucial piece of specialized law enforcement equipment, the "ROOK" and its attachments promise enhanced officer safety, increased tactical options, and progressive measures for incident commanders. Due to Hays County's proximity to international borders and bustling commercial transportation networks, there is a risk of high-profile, complex coordinated attacks. Unlike conventional armored vehicles, the "ROOK" stands out for its versatility in navigating tight spaces both indoors and outdoors. It also provides a unique capability by lifting SWAT members to inaccessible high-level building sections while ensuring ballistic protection. Hays County plans to integrate the "ROOK" into the operations of its SWAT team and offer assistance to neighboring departments. This specialized vehicle has been meticulously designed and reinforced to address encounters with armed subjects who often utilize fortifications and concealment in violent, criminal, or terroristic situations. The Hays County SWAT Team is a multijurisdictional team that covers Hays County and Caldwell County as well as responding to calls within the jurisdictions of San Marcos, Kyle and Buda. This project will not only provide critical protection and enhanced tactical capabilities for Hays County but also extend support to nearby tactical teams and Fire Departments. The "ROOK" and its integrated hydraulic ram and camera system enable a single operator to approach, breach, and remotely survey structures, facilitating deeper penetration into various building sections.

Problem Statement :
Provide a detailed account of the issues, threats or hazards that your project will target. For federal Homeland Security Grants, include specific references to the regional or state *Threat and Hazard Identification and Risk Assessment (THIRA)*, as applicable.
Hays County faces an increased risk of potential terrorist attacks due to its proximity to the international border and extensive commercial transportation networks, echoing threats experienced in other major U.S. cities. The acquisition of the ROOK will assist law enforcement officers with responding to critical incidents.

Therefore this project most closely aligns with the capability target "On-Scene Security, Protection, and Law Enforcement" identified on page 31 of the THIRA. Additionally, the project also aligns with the target "Mass Search and Rescue Operations" identified on page 30 of the THIRA as the ROOK will have a secondary use in responding to disasters and clearing debris after natural incidents like large scale flooding.

Existing Capability Levels :
Describe the existing capability levels, including resources that are currently in place to support this project prior to the use of grant funds.
Presently, both the Hays County Sheriff's Office and all surrounding counties rely exclusively on the "LENCO Bearcats" as their primary external ballistic protection for structures and buildings. However, these "LENCO Bearcats" lack critical features such as advanced ballistic shielding and an upgraded suspension and wheel system, which significantly surpass the capabilities of the ROOK. The limitations of the "LENCO" become apparent in its inability to maneuver officers into tight, confined spaces within structures due to its large size. In contrast, the ROOK boasts a robust, sturdy build and an enhanced drivetrain, empowering officers to access these intricate spaces even during inclement weather conditions, crucial during high-level threat scenarios. Currently the Austin Police Department is the only SWAT Team that has a ROOK in our COG. If other agencies need this COG asset it would be dependent on the use of the ROOK at that time. Recently, there was a multi-jurisdictional / multi-agency Federal High-Risk Warrant roundup involving several SWAT Teams within the COG. The use of APD’s Rook was limited due to the SWAT Teams that were involved in the roundup. By acquiring another ROOK, the Hays County Sheriffs Office would be able to assist other agencies in the area.

Capability Gaps:
Describe the capability gaps which will be addressed by the project. For federal Homeland Security Grants, include specific references to the regional or statewide State Preparedness Report (SPR).
This proposed initiative stands as a critical solution empowering the Hays County SWAT team and officers with the much-needed ballistic protection, a vital defense against potential terrorist threats looming across Hays County. This addition will significantly bolster law enforcement's capacity to effectively manage and respond to critical incidents involving firearms, addressing a current gap in our tactical capabilities. The existing tactical vehicles fail to offer adequate ballistic protection in elevated locations, leaving officers vulnerable to threats. Acquiring the "ROOK" eliminates this vulnerability, providing crucial support. Drawing from the CAPCOG's history, numerous terrorism-related incidents and other potential threats could have been mitigated or prevented with a strengthened response infrastructure. The overarching goal aims to fortify and sustain our first responders, SWAT, and bomb squads across ten counties, enhancing their capabilities to swiftly respond to any threat or hazard. This comprehensive strategy aims to delay, divert, intercept, and neutralize 100% of threats in all environments, significantly elevating our regional security posture. Concurrently, with the number of apartment buildings that are being built in Hays County, the need for a piece of armor to provide ballistic protection in an elevated position is crucial for the safety and success of the Operation when dealing with elevated target locations.

Impact Statement :
Describe the project goals/objectives and how this project will maintain capabilities or reduce capability gaps.
The proposed project aims to bridge existing gaps in our capabilities by significantly enhancing officer safety, boosting critical tactical advantages, and refining responses to high-stakes incidents. Through this endeavor, the Hays County Sheriff's Office will assist in region-wide efforts aiming to delay, divert, intercept, apprehend, or completely neutralize all threats or hazards across all ten locations. The acquisition of this cutting-edge equipment will empower our law enforcement officers to respond swiftly and more effectively in diverse scenarios.

Homeland Security Priority Actions:
Identify the Texas Homeland Security Priority Action most closely aligned with this project. Each Priority Action is linked with an *Objective from the Texas Homeland Security Strategic Plan (HSSP)*. List the Priority Action by number and text (e.g. *1.2.3 Expand and enhance the network of human sources that can provide detailed and relevant information on known or suspected terrorist and criminal enterprises*.)
4.11 Strengthen the state's regionally focused, multidiscipline, all hazards response system that ensures each region statewide has access to the necessary response teams and resources, to include enhancement of resource request and mutual aid.

Target Group :
Identify the target group and population expected to benefit from this project.
The primary beneficiaries of this proposed project lie within the Hays County SWAT Team. However, the benefits extend beyond the Sheriffs Office, encompassing the safety and security of Hays County residents and

all first responder agencies across the region. Collaborating closely with adjacent departments in need of immediate support, the Hays County SWAT Team will champion the implementation of the ROOK project, fortifying collective safety measures.

Long-Term Approach:
Describe how the applicant agency will maintain the capabilities supported by this project without additional federal or state funds. If sustainment is dependent upon federal or state grants, describe the ongoing need for future grants, as applicable.
The ongoing maintenance and management of the project will fall under the jurisdiction of the Hays County Sheriff's SWAT office following the initial purchase. The department bears the responsibility for ensuring regular upkeep, maintenance, and necessary care for the vehicle, which will exclusively be attended to by qualified technicians. This project is a one-time funding endeavor that doesn't necessitate further grant allocations. As of now, there are no viable alternatives within the budget to replace this essential technology. Evaluating all potential funding sources remains imperative to sustain this critical capability. Over the years, the Hays County Sheriff's office has consistently upheld equipment maintenance, prolonging the value of the assets and, by extension, the team's effectiveness. The commitment to securing various funding opportunities persists to guarantee the continuous readiness of assets and teams for responding to terrorism-related incidents.

You are logged in as **User Name**: scorprew

Print This Page

Agency Name: Hays County
Grant/App: 5242201 **Start Date:** 10/1/2024 **End Date:** 9/30/2025

Project Title: ROOK Tactical Vehicle
Status: Application Pending Submission

Project Activities Information

HSGP Instructions for Project Activity Selection

Homeland Security Grant Program (HSGP) applicants should only select one project activity. The eGrants system will allow multiple selections, but each HSGP subrecipient project must fit into one and only one of the Investment Categories that are listed as project activities under the "Activity List".

Urban Area Impact

Identify the Urban Area Strategic Plan Goal and Objective that most closely aligns with this project. List the Goal/Objective specific to your Urban Area Strategic Plan by number and text *(e.g., Goal 5: Interoperable Communications. Sustain standards-based, shared systems with adequate coverage and capacity to facilitate seamless interoperable communications throughout the Urban Area. Objective 2: Complete the deployment of standards-based shared systems to serve the region.)*

Selected Project Activities:

ACTIVITY	PERCENTAGE:	DESCRIPTION
Support of First Responder Capabilities	100.00	The ROOK will support law enforcement by deploying in response to critical incidents in which regular equipment is not sufficient. The ROOK will assist first responders with prevention, protection and response to terrorism, active shooter, or other similar incidents.

You are logged in as **User Name**: scorprew

Print This Page

Agency Name: Hays County
Grant/App: 5242201 **Start Date:** 10/1/2024 **End Date:** 9/30/2025

Project Title: ROOK Tactical Vehicle
Status: Application Pending Submission

Measures Information

Objective Output Measures

OUTPUT MEASURE	TARGET LEVEL
Number of exercises conducted.	5
Number of individuals participating in exercises.	50
Number of people trained.	50
Number of Special Response Team personnel provided with new or updated equipment.	1
Number of Special Response Teams created, maintained or enhanced.	1
Number of trainings conducted.	5

Objective Outcome Measures

OUTCOME MEASURE	TARGET LEVEL

Custom Output Measures

CUSTOM OUTPUT MEASURE	TARGET LEVEL

Custom Outcome Measures

CUSTOM OUTCOME MEASURE	TARGET LEVEL

You are logged in as **User Name**: scorprew

Print This Page

Agency Name: Hays County
Grant/App: 5242201 **Start Date:** 10/1/2024 **End Date:** 9/30/2025

Project Title: ROOK Tactical Vehicle
Status: Application Pending Submission

Budget Details Information

Budget Information by Budget Line Item:

CATEGORY	SUB CATEGORY	DESCRIPTION	OOG	CASH MATCH	IN-KIND MATCH	GPI	TOTAL	UNIT/%
Equipment	12VE-00-MISS Vehicle, Specialized Mission	ROOK armored Tactical Vehicle	$582,900.00	$0.00	$0.00	$0.00	$582,900.00	1

You are logged in as **User Name**: scorprew

Print This Page

Agency Name: Hays County
Grant/App: 5242201 **Start Date:** 10/1/2024 **End Date:** 9/30/2025

Project Title: ROOK Tactical Vehicle
Status: Application Pending Submission

Homeland Security Information

FUND SOURCE INFORMATION AND REQUIREMENTS

DHS Project Type: Establish/enhance regional response teams

Capabilities

Core Capability: On-scene Security, Protection, and Law Enforcement

Identify if this investment focuses on building new capabilities or sustaining existing capabilities. : New Capabilities (Build)

Are the assets or activities Deployable or Shareable: Deployable

___ Check if this Investment requires new construction or renovation, retrofitting, or modification of existing structures

___ Check if these funds will support a project that was previously funded with HSGP funding

Project Management Step Involved:

Check the step that most closely resembles the phase of the project activities to be completed during the grant period.

Step: Close Out

Description: The completion of all work on a project. Can also refer to completion of a phase of the project.

Process: Involves formally terminating and concluding all tasks, activities, and component parts of a particular project, or phase of a project.

Milestones

Milestone: Purchase Equipment; **Completion Date:** 12-30-2024
Milestone: Receive Equipment; **Completion Date:** 02-28-2025
Milestone: Begin officer trainings; **Completion Date:** 03-31-2025
Milestone: Fully integrate equipment into SWAT operations; **Completion Date:** 07-31-2025

NIMS Resources

___ Check if this project supports a NIMS typed resource

Enter the name of the typed resources from the Resource Type Library Tool: SWAT

Enter the ID of the typed resources from the Resource Type Library Tool: 6-508-1245

You are logged in as **User Name**: scorprew

AGENDA ITEM REQUEST FORM: G. 17.

Hays County Commissioners Court

Date: 03/26/2024

Requested By: Ron Hood

Sponsor: Commissioner Smith

Agenda Item:

Authorize a waiver to the purchasing policy for the Constable, Pct. 4 Office, to purchase one (1) motor officer helmet valued at $604.80 from Super Seer Corporation and amend the budget accordingly. **SMITH/HOOD**

Summary:

The Constable's Office needs to purchase a Motorcycle Helmet for a motor officer and requests a waiver of the purchasing policy of obtaining three (3) quotes. Super Seer has the correct-sized helmet available for immediate delivery, and it is compatible with the current LCRA communication system.
Attached: Super Seer Quote

Fiscal Impact:

Amount Requested: 604.80
Line Item Number: 001-638-00.5717_400

Budget Office:

Source of Funds: General Fund
Budget Amendment Required Y/N?: Yes
Comments: N/A
$605 - Increase Misc. Law Enforcement Equipment_Operating 001-638-00.5717_400
($605) - Decrease Law Enforcement Supplies 01-638-00.5206

Purchasing Office:

Purchasing Guidelines Followed Y/N?: No
Comments: requesting a waiver to the purchasing policy for obtaining three quotes

Auditor's Office

G/L Account Validated Y/N?: Yes
New Revenue Y/N?: N/A
Comments:

Attachments

Super Seer Helmet (Miller)

Hays County Constable Pct. 4 - Quote Carbon Shell

Hays County Constable Pct. 4
195 Roger Hanks Pkwy 3
Dripping Springs, TX 78620

Reference: 20240304-213619567
Quote created: March 4, 2024
Quote expires: April 29, 2024
Quote created by: Andrew Coukos

Ron Hood
ron.hood@co.hays.tx.us
512-858-7605

sales@superseer.com
+13036746663

Comments from Andrew Coukos

Products & Services

Item & Description	Quantity	Unit Price	Total
S2108V-66-461 Lightweight Carbon Fiber Vehicular Helmet –White with Black High Trim – Adj. Air intake vents w/ air channeled interior – Please Specify Size When Placing Order	1	$520.00	$520.00
S-9090 Open Ear "Y" Harness with Double Pull-The-Dot Snaps and Velcro for pvp Snap-on Headset	1	$38.00	$38.00

Item & Description	Quantity	Unit Price	Total
.4 ST Cushion Padded Interior – ¼" & 3/8" Pads Treated with SoftTouch (Moisture-Wicking, Anti-Bacterial, Anti-Microbial)	1	$0.00	$0.00
S-1154-2S Visor, Black Patent Leather with Silver Rank Band and "S" Buttons	1	$0.00	$0.00
S-7007 Nape strap & sleeve sewn in - factory installed	1	$0.00	$0.00
S-7105-M Quick Release Buckle – Micro Metric, Stainless Steel	1	$15.00	$15.00
S-1092 Helmet Carrying Bag, 50th Anniversary, Brushed Poly w/ Drawstring Closure	1	$0.00	$0.00
	One-time subtotal		$573.00
	Freight		$31.80
	Total		**$604.80**

Purchase terms

Terms: NET 30 DAYS
Delivery: 4-6 WEEKS ARO
FOB: EVERGREEN
Freight: PRE-PAID & ADDED TO INVOICE
Valid: 60 DAYS

Questions? Contact me

Andrew Coukos
sales@superseer.com
+13036746663

SUPER SEER CORPORATION
PO BOX 700
EVERGREEN, CO 80437
United States

AGENDA ITEM REQUEST FORM: G. 18.

Hays County Commissioners Court

Date: 03/26/2024

Requested By:

Sponsor: Commissioner Ingalsbe

Agenda Item:

Authorize the District Attorney to purchase one replacement Latitude 5540 Laptop for the Civil Division Legal Support Services Specialist and amend the budget accordingly. **INGALSBE**

Summary:

The current laptop for the Legal Support Services Specialist is not functioning and is no longer under warranty.

Fiscal Impact:

Amount Requested: $1,419
Line Item Number: 001-607-19.5712_400

Budget Office:

Source of Funds: General Fund
Budget Amendment Required Y/N?: Yes
Comments: Salary savings due to attrition are available for the equipment purchase.
$1,419 - Increase Computer Equipment_Operating 001-607-19.5712_400
($1,419) - Decrease Staff Salaries 001-607-19.5021

Purchasing Office:

Purchasing Guidelines Followed Y/N?: Yes
Comments: Texas Department of Information Resources contract DIR-TSO-3763

Auditor's Office

G/L Account Validated Y/N?: Yes
New Revenue Y/N?: N/A
Comments:

Attachments

Laptop Quote

Your quote is ready for purchase.

Complete the purchase of your personalized quote through our secure online checkout before the quote expires on **Apr. 09, 2024**.

You can download a copy of this quote during checkout.

Place your order

Quote Name:	**Lat 5540 w/I-7, 16gb, 256ssd, Non Touch**
Quote No.	**3000173579785.1**
Total	**$1,419.00**
Customer #	9657350
Quoted On	Mar. 14, 2024
Expires by	Apr. 09, 2024
Contract Name	Texas Department of Information Resources (TX DIR)
Contract Code	C000000006841
Customer Agreement #	TX DIR-TSO-3763
Deal ID	23048855

Sales Rep	Jeanna Smith
Phone	(800) 456-3355, 6180303
Email	Jeanna_Smith@Dell.com
Billing To	ACCOUNTS PAYABLE HAYS COUNTY - AUDITORS 712 S STAGECOACH TRL STE 1071 SAN MARCOS, TX 78666-6247

Message from your Sales Rep

Please use the Order button to securely place the order with your preferred payment method online. You may contact your Dell sales team if you have any questions. Thank you for shopping with Dell.

Regards,
Jeanna Smith

Shipping Group

Shipping To

ERICA LEE
HAYS COUNTY - AUDITORS
120 STAGECOACH TRL
SAN MARCOS, TX 78666-5268
(512) 393-2844

Shipping Method

Standard Delivery

Product	Unit Price	Quantity	Subtotal
Dell Latitude 5540	**$1,419.00**	**1**	**$1,419.00**

Dell Marketing LP. U.S. only. Dell Marketing LP. is located at One Dell Way, Mail Stop 8129, Round Rock, TX 78682

Subtotal:	**$1,419.00**
Shipping:	**$0.00**
Environmental Fee:	**$0.00**
Non-Taxable Amount:	**$1,419.00**
Taxable Amount:	**$0.00**
Estimated Tax:	**$0.00**
Total:	**$1,419.00**

License Subtotal for Commitment Term: $0.00
*Excludes Taxes

Dell Marketing LP. U.S. only. Dell Marketing LP. is located at One Dell Way, Mail Stop 8129, Round Rock, TX 78682

Shipping Group Details

Shipping To	Shipping Method
ERICA LEE HAYS COUNTY - AUDITORS 120 STAGECOACH TRL SAN MARCOS, TX 78666-5268 (512) 393-2844	Standard Delivery

	Unit Price	Quantity	Subtotal
Dell Latitude 5540 Estimated delivery if purchased today: Mar. 20, 2024 Contract # C000000006841 Customer Agreement # TX DIR-TSO-3763	**$1,419.00**	**1**	**$1,419.00**

Description	SKU	Unit Price	Quantity	Subtotal
Dell Latitude 5540 BTX Base	210-BGBJ	-	1	-
13th Gen Intel Core i7-1365U vPro (12 MB cache, 10 cores, 12 threads, up to 5.2 GHz Turbo)	379-BFBW	-	1	-
Windows 11 Pro, English, Brazilian Portuguese PT-BR, French, Spanish	619-ARSB	-	1	-
No Microsoft Office License Included - 30 day Trial Offer Only	658-BCSB	-	1	-
Intel(R) Rapid Storage Technology Driver	409-BCWS	-	1	-
Intel vPro Enterprise Technology Enabled	631-ADPV	-	1	-
16 GB, 2 x 8 GB, DDR4, 3200 MT/s, dual-channel, Non-ECC	370-AFVQ	-	1	-
M.2 2230 PCIe NVMe Gen4x4 256GB SSD Class 35	400-BOWJ	-	1	-
15.6" FHD (1920x1080) Non-Touch, AG, IPS, 250 nits, FHD IR Cam, WLAN/WWAN(4G)	391-BHEM	-	1	-
English US backlit keyboard with numeric keypad, 99-key	583-BHBG	-	1	-
Wireless Intel AX211 WLAN Driver MOD-SRV	555-BJDC	-	1	-
Intel(R) Wi-Fi 6E (6 if 6E unavailable) AX211, 2x2, 802.11ax, Bluetooth Wireless Card	555-BHHU	-	1	-
3- cell, 54Wh Battery, Express Charge Capable	451-BDBL	-	1	-
65W AC adapter, USB Type-C, TCO Gen9 compliant	492-BDHS	-	1	-
Single Pointing, Smart Card Reader, Finger Print Reader (w/ControlVault 3)	346-BINO	-	1	-
E4 Power Cord 1M for US	537-BBDO	-	1	-
Latitude 5540 Quick Start Guide	340-DDHL	-	1	-
ENERGY STAR Qualified	387-BBPC	-	1	-
Fixed Hardware Configuration	998-GDKL	-	1	-
Dell Additional Software	658-BFQB	-	1	-
Packaging BTS 65W Adapter (WHN)	340-DJVJ	-	1	-
Intel Core i7 vPro Enterprise Label	340-CYNX	-	1	-
POD Label	389-EDJB	-	1	-
Assembly Base	338-CHGG	-	1	-
Intel 13th Generation Core i7-1365U vPro, Intel Integrated Graphics, Thunderbolt	338-CHGN	-	1	-
Latitude 5540 Bottom Door, Intel 13th Gen U-Series CPU, Intel Integrated Graphics	321-BJTL	-	1	-

Dell Marketing LP. U.S. only. Dell Marketing LP. is located at One Dell Way, Mail Stop 8129, Round Rock, TX 78682

FHD/IR Camera, Temporal Noise Reduction, Camera Shutter, Mic	319-BBIE	-	1	-
EPEAT 2018 Registered (Gold)	379-BDZB	-	1	-
Dell Limited Hardware Warranty Extended Year(s)	975-3461	-	1	-
Dell Limited Hardware Warranty	997-8317	-	1	-
ProSupport Plus: Next Business Day Onsite, 1 Year	997-8366	-	1	-
Thank you for choosing Dell ProSupport Plus. For tech support, visit www.dell.com/contactdell or call 1-866-516-3115	997-8367	-	1	-
ProSupport Plus: 7x24 Technical Support, 3 Years	997-8380	-	1	-
ProSupport Plus: Next Business Day Onsite, 2 Year Extended	997-8381	-	1	-
ProSupport Plus: Keep Your Hard Drive, 3 Years	997-8382	-	1	-
ProSupport Plus: Accidental Damage Service, 3 Years	997-8383	-	1	-

Subtotal:	**$1,419.00**
Shipping:	**$0.00**
Environmental Fee:	**$0.00**
Estimated Tax:	**$0.00**
Total:	**$1,419.00**

Dell Marketing LP. U.S. only. Dell Marketing LP. is located at One Dell Way, Mail Stop 8129, Round Rock, TX 78682

Important Notes

Terms of Sale

This Quote will, if Customer issues a purchase order for the quoted items that is accepted by Supplier, constitute a contract between the entity issuing this Quote ("Supplier") and the entity to whom this Quote was issued ("Customer"). Unless otherwise stated herein, pricing is valid for thirty days from the date of this Quote. All product, pricing and other information is based on the latest information available and is subject to change. Supplier reserves the right to cancel this Quote and Customer purchase orders arising from pricing errors. Taxes and/or freight charges listed on this Quote are only estimates. The final amounts shall be stated on the relevant invoice. Additional freight charges will be applied if Customer requests expedited shipping. Please indicate any tax exemption status on your purchase order and send your tax exemption certificate to Tax_Department@dell.com or ARSalesTax@emc.com, as applicable.

Governing Terms: This Quote is subject to: (a) a separate written agreement between Customer or Customer's affiliate and Supplier or a Supplier´s affiliate to the extent that it expressly applies to the products and/or services in this Quote or, to the extent there is no such agreement, to the applicable set of Dell's Terms of Sale (available at www.dell.com/terms or www.dell.com/oemterms), or for cloud/as-a-Service offerings, the applicable cloud terms of service (identified on the Offer Specific Terms referenced below); and (b) the terms referenced herein (collectively, the "Governing Terms"). Different Governing Terms may apply to different products and services on this Quote. The Governing Terms apply to the exclusion of all terms and conditions incorporated in or referred to in any documentation submitted by Customer to Supplier.

Supplier Software Licenses and Services Descriptions: Customer's use of any Supplier software is subject to the license terms accompanying the software, or in the absence of accompanying terms, the applicable terms posted on www.Dell.com/eula. Descriptions and terms for Supplier-branded standard services are stated at www.dell.com/servicecontracts/global or for certain infrastructure products at www.dellemc.com/en-us/customer-services/product-warranty-and-service-descriptions.htm.

Offer-Specific, Third Party and Program Specific Terms: Customer's use of third-party software is subject to the license terms that accompany the software. Certain Supplier-branded and third-party products and services listed on this Quote are subject to additional, specific terms stated on www.dell.com/offeringspecificterms ("Offer Specific Terms").

In case of Resale only: Should Customer procure any products or services for resale, whether on standalone basis or as part of a solution, Customer shall include the applicable software license terms, services terms, and/or offer-specific terms in a written agreement with the end-user and provide written evidence of doing so upon receipt of request from Supplier.

In case of Financing only: If Customer intends to enter into a financing arrangement ("Financing Agreement") for the products and/or services on this Quote with Dell Financial Services LLC or other funding source pre-approved by Supplier ("FS"), Customer may issue its purchase order to Supplier or to FS. If issued to FS, Supplier will fulfill and invoice FS upon confirmation that: (a) FS intends to enter into a Financing Agreement with Customer for this order; and (b) FS agrees to procure these items from Supplier. Notwithstanding the Financing Agreement, Customer's use (and Customer's resale of and the end-user's use) of these items in the order is subject to the applicable governing agreement between Customer and Supplier, except that title shall transfer from Supplier to FS instead of to Customer. If FS notifies Supplier after shipment that Customer is no longer pursuing a Financing Agreement for these items, or if Customer fails to enter into such Financing Agreement within 120 days after shipment by Supplier, Customer shall promptly pay the Supplier invoice amounts directly to Supplier.

Customer represents that this transaction does not involve: (a) use of U.S. Government funds; (b) use by or resale to the U.S. Government; or (c) maintenance and support of the product(s) listed in this document within classified spaces. Customer further represents that this transaction does not require Supplier's compliance with any statute, regulation or information technology standard applicable to a U.S. Government procurement.

For certain products shipped to end users in California, a State Environmental Fee will be applied to Customer's invoice. Supplier encourages customers to dispose of electronic equipment properly.

Electronically linked terms and descriptions are available in hard copy upon request.

AGENDA ITEM REQUEST FORM: G. 19.

Hays County Commissioners Court

Date: 03/26/2024

Requested By: Brett Littlejohn

Sponsor: Commissioner Ingalsbe

Agenda Item:

Authorize payment to SI Mechanical for repairs to the industrial freezer at the Juvenile Center in the amount of $564.25 where no purchase order was issued as required per the Hays County Purchasing Policy. **INGALSBE/LITTLEJOHN**

Summary:

Emergency repairs were needed on the Juvenile Center industrial freezer to prevent spoilage of inventory.

Fiscal Impact:

Amount Requested: $564.25
Line Item Number: 070-685-00.5411

Budget Office:

Source of Funds: Juvenile Detention Center Fund
Budget Amendment Required Y/N?: No
Comments: N/A

Purchasing Office:

Purchasing Guidelines Followed Y/N?: No
Comments: No, PO obtained prior to work authorization

Auditor's Office

G/L Account Validated Y/N?: Yes, Equipment Maintenance and Repair Expense
New Revenue Y/N?: N/A
Comments:

Attachments

SI Mechanical invoice

SI Mechanical
PO Box 1589
Buda, TX 78610
512-593-6001

SI MECHANICAL, LLC

Bill To
HAYS COUNTY
COUNTY AUDITOR, 712 S STAGECOACH TRL # 1071
San Marcos, TX 78666

SIMechanical.com

Invoice No.	**12462200**	**Service Location**	HAYS CO JUVENILE CTR 2250 Clovis Barker Rd San Marcos, TX 78666
Invoice For	**Repair Job #31714277 (10/26/2023)**		
Transaction Date	11/6/2023		
Due Date	12/6/2023 (Net 30)		

Notes

Per approved proposal Replace door gasket on freezer
POC Jesse M

Code	Item	Svc	Qty	Unit Price	Amt
LAB RT-J	Regular Time - JM	HVAC	5.5	$0.00	$0.00
	gasket door	HVAC	1	$0.00	$0.00
	Per approved proposal	HVAC	1	$564.25	$564.25
				GRAND TOTAL	**$564.25**

AGENDA ITEM REQUEST FORM: G. 20.

Hays County Commissioners Court

Date: 03/26/2024

Requested By: T. CRUMLEY

Sponsor: Commissioner Shell

Agenda Item:

Authorize payment to Firetrol Protection Systems, Inc. in the amount of $2,250.11 for repairs to broken sprinkler heads at the Government Center as requested by Building Maintenance in which no purchase order was issued as required per the Hays County Purchasing Policy. **SHELL/T.CRUMLEY**

Summary:

Building Maintenance authorized Firetrol to repair broken and leaking sprinkler heads in the detention area of the Government Center without obtaining a purchase order as required per policy.

Fiscal Impact:

Amount Requested: $2,250.11
Line Item Number: 001-695-00.5451

Budget Office:

Source of Funds: General Fund
Budget Amendment Required Y/N?: No
Comments: N/A

Purchasing Office:

Purchasing Guidelines Followed Y/N?: No
Comments: No PO obtained prior to work authorization

Auditor's Office

G/L Account Validated Y/N?: Yes, Building Maintenance and Repair Expense
New Revenue Y/N?: N/A
Comments:

Attachments

Firetrol Invoice

M+C

FIRETROL Protection Systems

Firetrol Protection Systems, Inc.
4616 W. HOWARD LANE #7-700
Austin, TX 78728
Phone: 512-687-0115
Fax: 512-687-0120

Invoice Nbr:	**100916294**
Invoice Date:	03/12/2024

Thank you for choosing Firetrol Protection Systems

OneSource fire Solutions

Fire Sprinkler	**Life Safety**	**Fire Alarm**	**Extinguishers**
E-Lighting	**Range Hoods**	**Inspections**	**24/7 Service**
Maintenance	**Repair**	**Special Hazards**	**Backflow Preventers**

Bill To: HAYS COUNTY AUDITOR
Attn: ACCOUNTS PAYABLE
712 SOUTH STAGECOACH TRAIL
STE 1071
SAN MARCOS, TX 78666

Ship To: GOVERNMENT CENTER
712 S STAGECOACH TRAIL
SAN MARCOS, TX 78666

Customer Nbr	Cust PO No.	Firetrol WO No.	Date Completed	Terms	Due Date
4704651	20224-00000705	2402-3066	03/06/2024	NET 10	03/22/2024

Invoice Notes:

TEXAS BUYBOARD VENDOR ID 4924 CONTRACT # 654-21

Sprinkler head leaking in the sally port at the GC/Replace dry head

Joseph Escalona02/14/2024 3:10 PM CST
Arrived on site to see about a leaking sprinkler head.
Put system on test and by pass to drain down.
After further investigation, I found that the leak was comin from a dry pendant head.
it will need to be custom order
Replace leaking head with 1" plug.
A return trip is needed to install new custom head.
System is back online and normal.

Jonathon Haywood03/06/2024 11:38 AM CST
Installed new dry head and filled system back up

RECEIVED IN THE OFFICE
HAYS COUNTY AUDITOR
MAR 12 2024

ENTERED
MAR 26 2024

Service \ Item Description	Unit Description	Qty	Price	Amount
MATERIAL				
OT RATE	Each	3.00	150.00	450.00
TEAM RATE	Each	8.00	200.00	1,600.00
MATERIAL	Each	1.00	200.11	200.11

Please Remit To: Firetrol Protection Systems, Inc.
4616 W. HOWARD LANE #7-700
Austin, TX 78728
Phone: 512-687-0115 Fax: 512-687-0120
We gladly accept VISA, MC, DISCOVER, and AMEX

Invoice Totals

Sub Total	2,250.11
Sales Tax	0.00
TOTAL	**2,250.11**

AGENDA ITEM REQUEST FORM: G. 21.

Hays County Commissioners Court

Date: 03/26/2024

Requested By:

Sponsor: Commissioner Shell

Agenda Item:

Authorize the Civil Division of the Hays County Criminal District Attorney's Office to purchase proclamation Folders for Commissioners Court use and amend the budget accordingly. **SHELL**

Summary:

The supply of backing that is used for the ceremonial proclamations presented at Commissioners Court is almost depleted, and we will be replacing them with legal-sized folders.

Fiscal Impact:

Amount Requested: $1,200
Line Item Number: 001-607-19.5211

Budget Office:

Source of Funds: General Fund
Budget Amendment Required Y/N?: Yes
Comments: N/A
$1,200 - Increase Office Supplies 001-607-19.5211
($1,200) - Decrease Staff Salaries 001-607-00.5021

Purchasing Office:

Purchasing Guidelines Followed Y/N?: Yes
Comments: Obtained three quotes

Auditor's Office

G/L Account Validated Y/N?: Yes
New Revenue Y/N?: N/A
Comments:

Attachments

Quote

COMPANY FOLDERS: QUOTE & ORDER FORM

QUOTE

QUOTE NUMBER: CFQ-2102-323 **DATE QUOTED:** 03/06/2024 **QUOTE VALID UNTIL:** 04/05/2024

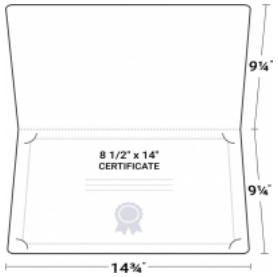

Product Name: Legal Size Certificate Cover 09-14

Description:

- Holds Sheet Size: 8 3/4" x 14"
- Foil Stamping: 1 color (metallic brass), 1 area
- Stock: 100lb Dark Blue Linen
- Slits: 14 x 8 1/2 (certificate) on inside panel
- Production Time: 7 working days, rush available
- Includes one area of foil up to 36 sq inches. Larger area is available upon request.
-

ORDER NOW

10% OFF NEW CUSTOMER DISCOUNT + FREE SHIPPING

PROMO CODE **NCD10**

(free shipping only applies to ground shipping in the contiguous United States)

The discounts above are in addition to the bulk discount below.

1. SELECT QUANTITY

◯ **Quantity:** 500
Price Per Item: $2.54
UPS Ground: FREE
Total: ***$1,270.00***

◯ **Quantity:** 1000
Price Per Item: $1.94 ***(23% bulk discount)***
UPS Ground: FREE
Total: ***$1,932.00***

◯ **Quantity:** 1500
Price Per Item: $1.75 ***(31% bulk discount)***
UPS Ground: FREE
Total: ***$2,623.00***

2. COMPLETE FORM

ARTWORK

Artwork File: ◯ Blank product (no art) ◯ Already sent ◯ Will send ◯ Company Folders will create

SHIPPING ADDRESS

Name: _____

Business: _____

Address: _____

City: _____

State: _____ Zip: _____

Blind Shipping: ◯ Yes ◯ No

Can Accept Shipments to Loading Dock: ◯ Yes ◯ No

If Rushed, Requested Delivery Date: _____

CHARGE MY SHIPPING ACCOUNT

When selected, we will remove the shipping costs from your order above.

Carrier: ◯ UPS ◯ Fedex

Account Number: _____

PAYMENT & BILLING ADDRESS

Name (on CC): _____

Business: _____

Address: _____

City: _____

State: _____ Zip: _____

Payment Method: ◯ Credit Card (CC) ◯ Check

If CC Selected, Info: ◯ On form below ◯ Will call later

Credit Card#: _____

Exp. Date: _____ Security Code: _____

WHEN DO YOU PLAN TO PLACE THIS ORDER AGAIN?

◯ Just this once (for event) ◯ In 6 months

◯ In 1 year ◯ Other _____

COMMENTS

3. SEND FORM

Submit form via email to orders@companyfolders.com, fax to (248) 883-8880, or mail address below. Please make checks payable to Company Folders, Inc. We will **NOT** run your credit card or deposit your check until the PDF proof and sales order are approved and signed. Once both documents are signed and full payment is processed, then production will begin.

COMPANY FOLDERS

Company Folders Inc., 22 West Huron Street, Suite 203, Pontiac, Michigan 48342

Tel.: 248 738-7600 | Fax: 248 883-8880 | info@companyfolders.com | www.companyfolders.com

AGENDA ITEM REQUEST FORM: G. 22.

Hays County Commissioners Court

Date: 03/26/2024

Requested By: T. CRUMLEY

Sponsor: Commissioner Cohen

Agenda Item:

Authorize payment to Security One, Inc. in the amount $759.32 for the installation and programming of a new keypad to the security alarm panel of the Precinct 5 Building as requested by Building Maintenance in which no purchase order was issued as required per the Hays County Purchasing Policy. **COHEN/T.CRUMLEY**

Summary:

Building Maintenance authorized Security One to install and program a new security panel keypad in the PCT. 5 Building without obtaining a purchase order as required per policy.

Fiscal Impact:

Amount Requested: $759.32
Line Item Number: 001-695-00.5451

Budget Office:

Source of Funds: General Fund
Budget Amendment Required Y/N?: No
Comments: N/A

Purchasing Office:

Purchasing Guidelines Followed Y/N?: No
Comments: No PO obtained prior to work authorization

Auditor's Office

G/L Account Validated Y/N?: Yes, Building Maintenance and Repair Expense
New Revenue Y/N?: N/A
Comments:

Attachments

Security One Invoice

Security One, Inc.

716 W Byrd Blvd
Universal City, TX 78148
Phone: (210) 341-8900 Fax: (210) 344-8900

mtz

Account Information

Customer Name	Hays County Auditor
Customer Number	805323
Invoice Number	1146099
Due Date	**03/07/2024**
P.O. Number	**92297**

Important Messages

Per customer's request: Installed new keypad in to panel. Addressed and programmed keypad. Tested by arming/disarming system.

Summary of Charges

Description	Quantity	Rate	Amount
Hays County Precinct 5, 500 Jack C Hays Trl, BUDA, TX			
Fire Service or Repairs	4.00	125.00	500.00
Commercial Fire/Security			
Trip Charge	1.00	75.00	75.00
Commercial Fire/Security			
Parts	0.00	0.00	238.00
Pre-Wire			
Sales Tax			0.00
Payments/Credits Applied			(53.68)
		Invoice Balance Due:	**$759.32**

Date	Invoice #	Description	Amount	Balance Due
03/07/2024	1146099	Service Call	$759.32	$759.32

Received In The Office

MAR 18 REC'D

Hays County Auditor

To pay with your credit card or bank account, or to update your emergency response list, please complete the back of this form.

Please detach and return this portion with your payment to ensure proper credit.

Security One, Inc.
716 W Byrd Blvd
Universal City, TX 78148

Return Service Requested

INVOICE

Customer Number	805323
Invoice Number	1146099
Date	03/07/2024
Due Date	**03/07/2024**
Amount Due	**$759.32**

Amount Enclosed: $_____

Please write your Customer Number 805323 on your check.
Make your check payable to: Security One, Inc.

☐ *Please check if your billing address has changed, provide your new address below.*

HAYS COUNTY AUDITOR
712 S STAGECOACH TRL STE 1071
SAN MARCOS, TX 78666-6247

2011

REMIT TO:

Security One, Inc.
716 West Byrd Blvd
Universal City, TX 78148-4363

AGENDA ITEM REQUEST FORM: G. 23.

Hays County Commissioners Court

Date: 03/26/2024

Requested By: Stephanie Hunt
Sponsor: Commissioner Ingalsbe
Co-Sponsor: Commissioner Cohen

Agenda Item:

Authorize payment to Amazon in the amount of $215.25 for the purchase of four wall art pieces for the Judicial Services Department and amend the budget accordingly. **COHEN/INGALSBE/HUNT**

Summary:

In November, the Purchasing Office made adjustments to the Amazon account so that there would be two approvers on all orders, first the Purchasing Specialist, then the Purchasing Agent. It was discovered in December that not all departments were set up with the dual approval process, and it was corrected. During this time, the Judicial Service Department submitted an order for four wall art pieces for their office. The Purchasing Specialist, new at the time, approved the order not knowing that this was not a typical County authorized purchase. The error was brought to the Purchasing Agents' attention when accounts payable received the invoice in February, and after reviewing the order, it was noted that the return window closed on January 31.

Fiscal Impact:

Amount Requested: $215.25
Line Item Number: 001-645-00.5211

Budget Office:

Source of Funds: General Fund
Budget Amendment Required Y/N?: Yes
Comments: Judicial Services operating budget is funded through ARPA funds. Therefore, recommending use of County Wide General Fund for the purchase of artwork.
$216 - Increase Office Supplies 001-645-00.5211
($216) - Decrease County Wide Contingencies 001-645-00.5399

Purchasing Office:

Purchasing Guidelines Followed Y/N?: Yes
Comments: Omnia Partners Contract R-TC-17006; however, not a typical County authorized purchase

Auditor's Office

G/L Account Validated Y/N?: Office Supplies Expense
New Revenue Y/N?: N/A
Comments:

Attachments

Amazon Invoice

amazon business

Invoice

Invoice # **11H4-V99N-CFFN** | **November 30, 2023**

For customer support, visit www.amazon.com/contact-us.

Invoice summary

Payment due by December 30, 2023

Item subtotal before tax	$ 438.40
Shipping & handling	$ 0.00
Promos & discounts	$ 0.00
Total before tax	$ 438.40
Tax	$ 0.00
Amount due	**$ 438.40 USD**

Account #	A3F5812D47DRYG
Payment terms	Net 30
Purchase date	27-Nov-2023
Purchased by	Randy Focken
Department	Judicial Services (Pretrial)
GL code	011-763-99-165.5211
Comments/What Order is For	Office Supplies

Registered business name

Hays County

Bill to

Hays County
Kimberli Andrews
712 S. Stagecoach Trl
Suite 1071
San Marcos, TX 78666

Ship to

Emily Madely / Shannon Nelson
712 S STAGECOACH TRL STE 1071
SAN MARCOS, TX 78666-6247

Pay by

Electronic funds transfer (EFT/ACH/Wire)

Account name	Amazon Capital Services, Inc.
Bank name	Wells Fargo Bank
ACH routing # (ABA)	121000248
Bank account # (DDA)	41630410610898283
SWIFT code (wire transfer)	WFBIUS6S

Check

Amazon Capital Services
PO Box 035184
Seattle, WA 98124-5184

Include Amazon invoice number(s) in the descriptive field of your electronic funds transfer payment, or
Email ar-businessinvoicing@amazon.com to submit your remittance detail.

Invoice details

	Description	Qty	Unit price	Item subtotal before tax	Tax
1	Canvas Wall Art Bedroom Wall Decor Blue Pictures for Living Room Office Artwork for Walls 60" W x 28" H Framed Positive Art Farmhouse Decor ASIN: B0BV27422V Sold by: zhangzhoujunxinghuigongyipinyouxiangongsi Order # 114-5302240-9969007	1	$87.99	$87.99	0.000%

amazon business

Invoice

Invoice # **11H4-V99N-CFFN**

	Description	Qty	Unit price	Item subtotal before tax	Tax
2	Canvas Abstract Wall Painting Artwork: Aqua Modern Picture Art Hand Painted on Texture Canvas for Living Room (24" x 18" x 1 Panel) ASIN: B07Z8L9CC8 Sold by: Shengfan Company Limited Order # 114-5302240-9969007	1	$35.88	$35.88	0.000%
3	ExcelMark Rectangular Custom Self-Inking Stamp - Up to 3 Lines - 11 Color Choices and 17 Font Choices (Medium) ASIN: B0BSYP11ZD Sold by: Schwaab Inc Order # 114-2565157-1449030	1	$22.47	$22.47	0.000%
4	Rubbermaid Commercial Products Plastic Wastebasket/Trash Can, 7-Gallon/28-Quart, Black, for Bedroom/Bathroom/Office, Fits under Desk/Cabinet/Sink, Pack of 4 ASIN: B0861JWZT1 Sold by: Sandas Traders LLC Order # 114-1146435-3101833	2	$31.05	$62.10	0.000%
5	ZZTX 6 PCS Professional Magnetic Staple Remover Puller Rubberized Staples Remover Staple Removal Tool for School Office Home 5 Colors ASIN: B082NVTDF8 Sold by: LAI CHANGQUAN Order # 114-5302240-9969007	2	$8.79	$17.58	0.000%
6	LEE 10053 Sortkwik Fingertip Moisteners, 3/8 oz, Pink, Sold as 6 Pack ASIN: B077J8ZVJ8 Sold by: Product Movement Technologies, LLC Order # 114-5302240-9969007	2	$8.88	$17.76	0.000%
7	Post-it Mini Notes, 1 3/8 x 1 7/8 in, 24 Pads, Canary Yellow, Clean Removal, Recyclable ASIN: B000GLSJB0 Sold by: Delaware Order # 114-0798030-6016220	1	$10.43	$10.43	0.000%
8	DEWENWILS Wireless Remote Control Outlet, Programmable and Expandable Electrical Outlet Switch, 100FT Range, 125V/15A/1875W Wireless Remote Light Switch, FCC Listed, 2 Remote and 5 Outlets... ASIN: B09WZSY1DN Sold by: Dewenwils Network Technology Co., Ltd Order # 114-5302240-9969007	1	$30.99	$30.99	0.000%

amazon business

Invoice

Invoice # **11H4-V99N-CFFN**

	Description	Qty	Unit price	Item subtotal before tax	Tax
9	Swingline 2 Hole Punch, Comfort Handle Two Hole Puncher, 28 Sheet Punch Capacity, 50% Reduced Effort, Includes Alignment Guide, Black (74050) ASIN: B000J0B9N8 Sold by: Amazon.com Services LLC Order # 114-5302240-9969007	1	$16.99	$16.99	0.000%
10	Germ-X Original Hand Sanitizer, Non-Drying Moisturizing Gel with Vitamin E, Instant and No Rinse Formula, 8 Fl Oz Pump Bottle (Pack of 12) ASIN: B0889WWM49 Sold by: Amazon.com Services LLC Order # 114-5302240-9969007	1	$28.84	$28.84	0.000%
11	Abstract Flower Picture Wall Art: Dogwood Painting Hand Painted Artwork on Canvas for Living Room (40"W x 20"H,Multi-Sized) ASIN: B0836R621S Sold by: Dongguan Magento Electronic Technology Co.,Ltd Order # 114-5302240-9969007	1	$50.39	$50.39	0.000%
12	maylit Under Cabinet Lights Plug in, 3 Pcs 12 Inch Ultra Thin Under Cabinet Lighting, Super Bright Warm White Under Counter Lights for Kitchen, Dimmable Light for Cabinet, Counter, Workbench, Desk ASIN: B0C5JDP2RT Sold by: E-KINGDOM INTERNATIONAL COMPANY LIMITED Order # 114-5302240-9969007	1	$15.99	$15.99	0.000%
13	SIGNWIN Framed Blue & White Overexposed Wood Tree Ring Wall Art, Set of 4 Nature Wildernes Wall Decor Prints, Minimalism Wall Décor for Living Room, Bedroom - 11"x14" Black ASIN: B0C23K77QQ Sold by: SIGNWIN INC Order # 114-2780177-9105036	1	$40.99	$40.99	0.000%

Total before tax	$438.40
Tax	$0.00
Amount due	**$438.40**

FAQs

How is tax calculated?

Visit https://www.amazon.com/gp/help/customer/display.html/ref=hp_leftv4_sib?ie=UTF8&nodeId=202036190

How are digital products and services taxed?

Visit https://www.amazon.com/gp/help/customer/display.html/ref=hp_leftv4_sib?ie=UTF8&nodeId=202074670

AGENDA ITEM REQUEST FORM: G. 24.

Hays County Commissioners Court

Date: 03/26/2024

Requested By: Jennifer Doinoff

Sponsor: Commissioner Shell

Agenda Item:

Approve the Hart Intercivic repair estimate in the amount of $7,000.00 for ten Duo Touch and four Controllers that are no longer under warranty; authorize a discretionary exemption pursuant to Texas Local Government Code Chapter 262.024 (a)(7)(D) and amend the budget accordingly. **SHELL/DOINOFF**

Summary:

The Election Office is requesting a discretionary exemption pursuant to Texas Local Government Code Chapter 262.024 (a)(7)(D) for the repairs of 10 Duo Touch, and 4 Controllers. The labor to repair the machines is covered under Hart Intercivic's Buyboard contract 710-23; however, the repair parts are not covered and are considered an open market item.

Fiscal Impact:

Amount Requested: $7,000
Line Item Number: 002-655-00.5411

Budget Office:

Source of Funds: Election Contract Fee Fund
Budget Amendment Required Y/N?: Yes
Comments: N/A
$7,000 - Increase Equipment Maintenance & Repair 002-655-00.5411
($7,000) - Decrease Election Expense 002-655-00.5446

Purchasing Office:

Purchasing Guidelines Followed Y/N?: Yes
Comments: Buyboard Contract 710-23 and also requires a discretionary exemption pursuant to Texas Local Government Code Chapter 262.04 (a)(7)(D)

Auditor's Office

G/L Account Validated Y/N?: Yes
New Revenue Y/N?: N/A
Comments:

Attachments

Discretionary Exemption Certification
Hart - Repairs

Hays County Commissioners Court
March 26, 2024
Purchase of Open Market Item: Parts needed for Repairs are not covered under Buyboard service contract (710-23)

Attn: County Clerk

As per requirements to authorize a discretionary exemption per Texas Local Government Code 262.024(a)(7)(D), the Election's Department recognizes Hart InterCivic, Inc. as a sole source provider to provide replacement parts and accessories for the Hays County Verity Voting System equipment.

JDoinoff

Jennifer Doinoff, Hays County Elections Administrator

RMA Pricing Estimate

Date March 12, 2024

Customer Hays County Elections

Customer PO (if applicable)

System Version

Additional Notes V039853

Requested Delivery date

Item	Description	Qty.	Unit Price	Ext. Price	Remarks
1	out of warranty Duo Touch	10	$225.00	$2,250.00	**Details of Work Completed**
	Serial Numbers:B1902497207 B1902643008,B1902642008 B1902675108,B1902497907 B1902651908,B1902495207 B1902639208,B1902432907 B1902641208				**Labor: 10** hours
1	out of warranty Duo Touch- Parts	10	$275.00	$2,750.00	**Details of Work Completed**
	Serial Numbers:B1902497207 B1902643008,B1902642008 B1902675108,B1902497907 B1902651908,B1902495207 B1902639208,B1902432907 B1902641208				**Parts**: estimate
2	out of warranty Controller	4	$225.00	$900.00	**Details of Work Completed**
	Serial Numbers:C1902389507 C1902378807,C1902373707 C1902393807				**Labor: 4** hours
2	out of warranty Controller- Parts	4	$275.00	$1,100.00	**Details of Work Completed**
	Serial Numbers:C1902389507 C1902378807,C1902373707 C1902393807				**Parts:** Estimate
			Subtotal	$7,000.00	
			Total	$7,000.00	

Terms and Conditions:

1) Prices are effective for 30 days from date of quote. Quote does not includes applicable sales tax. Sales tax will be added to your total as required.
2) There is a minimum diagnostic fee of $225 per unit plus any applicable shipping fees if the customer decides not to have repairs performed.
3) Customer is responsible for shipping fees for all equipment shipped to Hart for repair. Hart will pay return shipping fees based on a normal 5 business day transit time from Hart to Customer.

Billing Address and Phone

Hays County Elections
Jennifer Anderson
712 S. Stagecoach Trail, Suite 1071
San Marcos, TX 78666
512-393-7310

Shipping Address and Phone

Hays County Elections
Melissa Jordan
712 S. Stagecoach Trail, Suite1045
San Marcos, TX 78666

Billing Instructions

Shipping Instructions

Hart Management Approval: Daryl Awbrey

Name: Daryl Awbrey **Title:** RMA Coordinator

Customer Approval:

Name: **Title:**

AGENDA ITEM REQUEST FORM: G. 25.

Hays County Commissioners Court

Date: 03/26/2024

Requested By: Jerry Borcherding

Sponsor: Judge Becerra

Agenda Item

Approve specifications for IFB 2024-B10 Road Building Materials - General Road Construction and authorize Purchasing to solicit bids and advertise. **BECERRA/BORCHERDING**

Summary

Hays County issues this Invitation for Bid (IFB) to solicit bids for annual contracts for furnishing the road building materials set forth in this bid invitation. These materials are generally used by the Hays County Transportation Department for road maintenance and construction projects.

Attachments

IFB 2024-B10 Solicitation
Attachment A - IFB 2024-B10

SOLICITATION, OFFER AND AWARD

Hays County Auditor
Purchasing Office
712 S. Stagecoach Trail, Suite 1012
San Marcos, Texas 78666

Solicitation No.: **IFB 2024-B10 Road Building Materials – General Road Construction**	**Date Issued: March 28, 2024**

SOLICITATION

Vendors must submit proposals as listed: One (1) original and one (1) digital copy on a thumb drive at the Hays County Purchasing Office at the address shown above or Electronically through BidNet Direct and one (1) hard copy at the Hays County Purchasing Office at the address shown above until:

10:00 a.m. local time April 18, 2024.

Proposals received after the time and date set for submission will be returned unopened.

For information please email: purchasing@co.hays.tx.us	Questions concerning this IFB must be received in writing no later than 5:00 on April 4, 2024.	Phone No.: (512) 393-2267

OFFER (Must be fully completed by Respondent)

In compliance with the above, the undersigned offers and agrees to furnish all items or services awarded at the prices stipulated for each item delivered at the designated point(s) and within the time specified herein. Award shall include all solicitation documents and attachments.

MANUALLY SIGN ALL COPIES SUBMITTED. SIGNATURE IS MANDATORY.

Respondent		Respondent's Authorized Representative	
Entity Name: Mailing Address:		Name: Title: Email Address: Phone No.:	
Signature:		Date:	
Name, Email Address and Phone No. of person authorized to conduct negotiations on behalf of Respondent:			

NOTICE OF AWARD (To be completed by County)

Funding Source:	Awarded as to item(s):	Contract Amount:
Vendor:		Term of Contract:
This contract issued pursuant to award made by Commissioners Court on:	Date:	Agenda Item:

Important: Award notice may be made on this form or by other Authorized official written notice.	_____ Hays County Judge	_____ Date
	_____ Hays County Clerk	_____ Date

Table of Contents

Solicitation, Offer and Award 1

I. IFB Submittal Checklist 3

II. Summary 4

III. Specifications 6

- A. Introduction 6
- B. Material Requirements 6
- C. Qualifications 6
- D. Mandatory Bid Form 7
- E. Submittal Requirements 7
- F. Award of Contract 8
- G. Contract Term & Price Determination 9
- H. Warranty of Performance 9

IV. General Terms and Conditions for Solicitations 10

V. Vendor Reference Form 19

VI. Certificate of Interested Parties 20

VII. Conflict of Interest Questionnaire 21

VIII. Code of Ethics 23

IX. HUB Practices 24

X. House Bill 89 Verification 26

XI. Senate Bill 252 Certification 27

XII. Debarment & Licensing Certification 28

XIII. Vendor/Bidder's Affirmation 29

XIV. Related Party Disclosure Form 30

XV. Federal Affirmations and Solicitation Acceptance 32

Attachment A: 2024-B10 Bid Form

I. IFB Submittal Checklist

This checklist is provided for the Vendor's convenience and identifies the documents that MUST be submitted for the bid/proposal to be considered responsive, as well as the required forms requested by Hays County.

A COMPLETE SOLICITATION RESPONSE PACKAGE INCLUDES:

The following forms MUST be returned for the bid/proposal to be considered responsive:

____ 1. Solicitation, Offer and Award Form completed and signed

____ 2. Mandatory Bid Form: Attachment A

____ 3. Vendor Reference Form

Required Forms by Hays County:

____ 1. Conflict of Interest Questionnaire completed and signed

____ 2. Code of Ethics signed

____ 3. HUB Practices signed

____ 4. House Bill 89 Verification signed and notarized

____ 5. Senate Bill 252 Certification

____ 6. Debarment & Licensing Certification signed and notarized

____ 7. Vendor/Bidder's Affirmation completed and signed

____ 8. Related Party Disclosure Form

____ 9. Federal Affirmations and Solicitation Acceptance

____ 10. System for Award Management (www.SAM.gov) Printout

____ 11. Any addenda applicable to this solicitation

Hays County will accept bids, by the stated due date by one of the following methods:

____ 1. Electronic Submission of Bid Packet through BidNet Direct and one (1) hard copy delivered, within 24 hours of proposal due date, in a sealed envelope with the Solicitation Number and Vendor's name on the outermost envelope addressed to: Hays County Purchasing, 712 S Stagecoach Trail, Suite 1012, San Marcos, TX 78666

OR

____ 2. One original of the proposal and a digital copy on a thumb drive in a sealed envelope with the Solicitation Number and Vendor's Name on the outermost envelope, addressed to:
Hays County Purchasing, 712 S Stagecoach Trail, Suite 1012, San Marcos, TX 78666

II. Summary

1. Type of Solicitation:	Invitation for Bid
2. Solicitation Number:	IFB 2024-B10 Road Building Materials – General Road Construction
3. Issuing Office:	Hays County Purchasing Office 712 S. Stagecoach Trial, Suite 1012 San Marcos, TX 78666
4. Responses to Solicitation:	Sealed proposals marked with Solicitation Number and Vendor Name on the outermost envelope Manual: One (1) Original and one (1) digital copy on a thumb drive, or Electronic: Proposals can be submitted through BidNet Direct and one (1) hard copy is required to be received within 24 hours of due date.
5. Deadline for Responses:	In issuing office no later than: **April 18, 2024; 10:00 a.m. Central Time (CT)**
6. Initial Contract Term:	May 2024 – May 2025
7. Optional Contract Terms:	Four (4), one-year renewal options
8. Designated Contact:	Hays County Purchasing Email: purchasing@co.hays.tx.us
9. Questions & Answers:	**Questions regarding this solicitation must be made in writing and submitted to the designated contact above no later than April 4, 2024; 5:00 p.m. CT. Telephone inquiries will not be accepted.** Questions may be submitted by email to the address above. Answers to questions will be provided in the form of an addendum posted after the question deadline on the CivicPlus, BidNet Direct, and ESBD websites for the benefit of all potential respondents. The County reserves the right to contact the person submitting a question to clarify the question received, if necessary. Each clarification, supplement, or addenda to this IFB, if any, will be posted on the CivicPlus, BidNet Direct and ESBD websites. All potential or actual respondents are responsible for monitoring the websites for such materials. Respondents are deemed to have notice of, and are required to comply with, any such material posted in accordance with this paragraph. Respondents should not rely upon any other sources of written or oral responses to inquiries.
10. Addenda	Any interpretations, corrections or changes to this IFB and specifications will be made by addenda. Sole issuing authority of addenda shall be vested in the Hays County Purchasing Office. It is the Respondent's responsibility to acknowledge receipt of all addenda with proposal submission.

11. Contact with County Staff: Upon issuance of this solicitation, employees and representatives of Hays County, other than the Purchasing Office staff identified as the Designated Contact above, will not discuss the contents of this solicitation with any Respondent or its representatives. Failure of a Respondent or any of its representatives to observe this restriction may result in disqualification of any related offer. This restriction does not preclude discussions between affected parties for the purpose of conducting business unrelated to this procurement.

Anticipated Schedule of Events

March 28, 2024	Issuance of IFB
April 4, 2024	Deadline for Submission of Questions (5:00 PM CT)
April 18, 2024	Deadline for Submission of Proposals (10:00 AM CT) **Late bids will not be accepted.**
May 2024	Anticipated contract award date

III. Specifications

A. Introduction

Hays County issues this Invitation for Bid (IFB) to solicit bids for annual contracts for furnishing the materials set forth in this bid invitation. These materials are generally used by the Hays County Transportation Department for road maintenance and construction projects.

B. Materials Requirements

All materials listed shall meet the applicable specifications for the item, class, and type as identified on the bid form (see Attachment A: IFB 2024-B10 Road Building Materials – General Road Construction Bid Form). For items identified with a "TXDOT Item" number, refer to the Texas Department of Transportation Standard Specifications for Construction and Maintenance of Highways, Streets, and Bridges (adopted November 1, 2014). For items identified with a "City of Austin Item" number, refer to the City of Austin Standard Specifications Manual (updated January 11, 2018).

Hays County reserves the right to refuse or reject any materials that do not meet the requirements of the specifications. Any materials refused or rejected based on non-conformance with the specifications shall be removed at no cost to the County.

C. Qualifications

RESPONSIBILTY: A prospective respondent must affirmatively demonstrate respondent's responsibility. A prospective respondent must meet the following requirements:

- Have adequate financial resources, or the above ability to obtain such resources as required
- Be able to comply with required or proposed delivery schedule
- Have a satisfactory record of performance
- Be otherwise qualified and eligible to receive an award
- Contractor shall be regularly engaged in the performance of the specified work and make available, for this purpose, a regular force of skilled workers and equipment.
- Contractors' vehicles must be permitted in compliance with all Federal, State, County and City requirements.
- Materials and equipment furnished by the Contractor shall conform in strength, quality of material, appearance, and workmanship to that which is usually provided by contractors in this trade.
- Contractor shall be required to maintain an office staffed by company representatives during normal business hours, Monday through Friday 7:00 a.m. to 5:00 p.m. Contractor shall always have available an email address and telephone number for communication between the Contractor and the Contract Administrator.
- The County shall have the right to take such steps as it deems necessary to determine the ability of the Bidder to perform the work and reserves the right to request additional information. The right is reserved to reject any bid where an investigation of the evidence or information submitted by such Bidder does not satisfy the County that the Bidder is qualified to properly carry out the terms of the Bid Document

TIME OF PERFORMANCE: It is imperative that the prospective respondent respond to County requests in a timely manner and comply with required or proposed delivery schedules. Please describe how you intend to respond to and track County requests.

SYSTEM FOR AWARD MANAGEMENT: Respondent and its Principals may not be debarred or suspended nor otherwise on the Excluded Parties List System (EPLS) in the System for Award Management (SAM). Include verification that the company as well as the company's principals are not listed (are not debarred) through the System for Award Management (www.SAM.gov). Enclose a printout of your Entity Registration page that shows your company is in active status and is not expired or suspended.

COMPLIANCE WITH LAWS: The successful bidder shall comply with all applicable federal, state and local laws and regulations pertaining to the practice of the profession and the execution of the duties under the bid.

INSURANCE: The successful bidder will be required to furnish proof of insurance for Workers' Compensation, Auto Liability and General Liability before any work may begin.

It is the practice of Hays County to encourage local participation and to promote and encourage contracting and subcontracting opportunities for locally owned businesses and labor in all contracts. The County of Hays does not discriminate on the basis of race, color, national origin, sex, religion, age and disability in employment or the provision of services.

D. Mandatory Bid Form

Respondent must provide its total bid amount by completing the mandatory bid form included as Attachment A: IFB 2024-B10 Road Building Materials – General Road Construction Bid Form. Pricing for materials shall be bid for pickup by Hays County at the bidder's plant and for delivery to Hays County jobsites. Because jobsite locations are variable, bids are also requested for Material Transportation Services on a per mile basis. Respondent may bid on all or any portion of the items listed for bid, however, if a bid for Material Transportation Service is not made in conjunction with a bid for materials to be delivered, the bid for materials to be delivered will be considered non-responsive.

Hays County is exempt from federal excise and state sales tax; therefore, tax must not be included in this bid.

ESTIMATED QUANTITIES: Quantities listed on the bid form are approximations of annual needs and will be used for the comparison of bids. Individual orders and payments will be made in accordance with the contract. Hays County is not obligated to purchase any minimum amount, and the County may purchase any reasonable amount greater than the estimate for the same unit price. Any limit on quantities available must be stated expressly in the bid.

E. Submittal Requirements

Respondent must deliver the following to the Issuing Office by the specified deadline or upload the bid packet electronically to BidNet Direct:

- Mailed or Dropped off Bid Packets: All items must be in a sealed envelope marked with the Solicitation Number and Respondent Name on the outermost envelope.
  - One (1) original bid with required forms manually signed by Respondent with original signatures
  - One (1) digital copy of the full bid packet with all required forms on a thumb drive
- Electronic Bids:
  - Upload proposal with required forms manually signed by the respondent. (through BidNet Direct)
  - One (1) original proposal with required forms manually signed by the respondent, delivered to the Hays County Purchasing Office. Either the original or Electronic Proposal (through BidNet Direct) MUST be received by the due date and time to be considered responsive. Physical copy must be received in the Hays County Purchasing Office within 24 hours of proposal due date.

<u>LATE SUBMITTALS WILL NOT BE ACCEPTED.</u>

Submittals will be publicly opened at the Office of the Hays County Auditor upon the deadline for submittal. Respondents, their representatives and interested persons may be present. All unofficial bid results will be posted on the following two sites, until an award has been made in Commissioners Court:

Hays County: https://hayscountytx.com/departments/auditor/purchasing/bidding-opportunities/
BidNet Direct: https://www.bidnetdirect.com/texas/hayscounty

It is understood that Hays County reserves the right to accept or reject any and all submittals as it shall deem to be in the best interest of Hays County.

ALTERING BIDS: Any interlineations, alteration, or erasure made before receiving time must be initialed by the signer of the bid, guaranteeing authenticity.

WITHDRAWING OF BID: A bid may be withdrawn at any time prior to the official opening. After the official opening, bids may not be amended, altered or withdrawn without the recommendation of the County Purchasing Manager and the approval of Commissioners Court.

FORMS: All Bids must be submitted on the forms provided in this solicitation document. Changes to solicitation forms made by bidders shall disqualify the bid.

F. Award of Contract

BASIS OF AWARD: The County reserves the right to award a contract to a bidder on the basis of unit price low bid and/or the best value for the County. The County reserves the right to accept in part or in whole any bids submitted and waive any technicalities for the best interest of the County.

The bid award shall be based on but not necessarily limited to, the following factors:

- Total price
- Special needs and requirements of Hays County
- Vendors past performance record with Hays County, if applicable
- Hays County's evaluation of vendor's ability to perform
- Vendor's references

REFERENCES: Hays County requires respondent to supply with the statement of qualifications, a list of at least three (3) references where like services have been supplied by their company. Include name of company, address, telephone number and name of representative.

CONTRACT: This bid, when properly accepted by Hays County shall constitute a contract equally binding between the successful bidder and Hays County. No negotiations, decisions, or actions shall be initiated or executed by any vendor as a result of any discussions with any County employee. Only those communications that are in writing from the Purchasing Manager shall be considered as a duly authorized expression on behalf of the County. No oral agreements either expressed or implied will be considered in fulfilling this contract. No additional terms will become part of this contract with the exception of Commissioners Court approved change orders.

BIDDER AGREES, if this bid is accepted, to furnish any and all services upon which prices are offered, at the price(s) and upon the terms and conditions contained in the specifications. The period for acceptance of the bid will be ninety (90) calendar days.

The successful bidder expressly warrants that all services specified in the IFB will be performed with care and diligence and in accordance with all specifications of the IFB. The successful bidder agrees to correct any deficiencies in its performance of services upon notification by the County and without additional expense to the County.

The County reserves the right to accept in part or in whole any bids submitted and waive any technicalities for the best interest of the County.

If the bid is accepted and approved by Commissioners Court, this document shall be made part of the contract. No negotiations, decisions, or actions shall be initiated or executed by any vendor as a result of any discussions with any County employee. No oral agreements either expressed or implied will be considered in fulfilling this contract.

G. Contract Term & Price Redetermination

The term of this contract will begin on the date of award by the Hays County Commissioners Court and be effective through a full year (365 days). Hays County reserves the right to extend this contract annually for a maximum of four (4) additional one (1) year periods.

Bid pricing shall be firm for the entire term of the awarded contract. Prices established in continuing agreements and annual term contracts may be raised due to inflation and increased operating costs. Any price increase proposed must be submitted forty-five (45) calendar days prior to the anniversary date of the annual term contract and shall be supported with proper documentation, as provided by the U.S. Department of Labor – Bureau of Labor and Statistics, Producer Price Index (PPI), for the most current data representing a 12-month period at the time of consideration. Hays County will have fifteen (15) days, from the receipt of proposed price increases, to review any proposed price increases and reserves the right to approve or disapprove any request for increased prices. If Hays County disapproves the proposed price increases, the County will issue an intent to terminate, and the contract will not be renewed.

H. Warranty of Performance

The successful respondent expressly warrants that all services specified in the IFB will be performed with care and diligence and in accordance with all specifications of the IFB. The successful bidder agrees to correct any deficiencies in performance of services upon notification by the County and without additional expense to the County.

CONTINUING NON-PERFORMANCE of the bidder, in terms of specifications, shall be basis for the termination of the contract by the County. The County shall not pay for merchandise/services that are unsatisfactory. Failure to perform any provision will constitute a default of contract, in which case, corrective action shall take place within ten (10) days from the date of written notice citing the nature of breach. Failure to take corrective action or to provide a satisfactory written reply excusing such failure within the prescribed ten (10) days will authorize the County to terminate this agreement by written notice.

COMPLIANCE WITH LAWS: The successful Respondents shall comply with all applicable federal, state and local laws and regulations pertaining to the practice of the profession and the execution of the duties under the solicitation. Any contract executed as a result of this IFB shall be governed by the laws of the State of Texas.

IV. General Terms and Conditions for Solicitations Applicable To: Invitations for Bid (IFB)

1. GENERAL DEFINITIONS:
    a. "Auditor" means the Hays County Auditor or his/her designee.
    b. "Commissioners Court" means Hays County Commissioners Court.
    c. “Contract” means the contract awarded pursuant to the IFB.
    d. “Contractor” means a person or firm receiving an award of contract from Commissioners Court.
    e. "County" means Hays County, Texas, a political subdivision of the State of Texas.
    f. "County Building" means any County owned buildings and does not include buildings leased by County.
    g. "Is doing business" and "has done business" mean:
        i. Paying or receiving in any calendar year any money or other valuable thing which is worth more than $250 in the aggregate in exchange for personal services or for purchase of any property or property interest, either real or personal, either legal or equitable; or
        ii. Loaning or receiving a loan of money; or goods or otherwise creating or having in existence any legal obligation or debt with a value of more than $250 in the aggregate in a calendar year;
        iii. But does not include any retail transaction for goods or services sold to a Key Contracting Person at a posted, published, or marked price available to the general public.
    h. "Purchasing Manager" means the Hays County Purchasing Manager.
    i. “Sub-contractor” means a person or firm doing business with a Contractor.

2. FUNDING: Funds for payment on this Contract have been provided through the County budget approved by Commissioners Court for this fiscal year only. State of Texas statutes prohibit the obligations and expenditure of public funds beyond the fiscal year for which a budget has been approved. However, the cost of items or services covered by this Contract is considered a recurring requirement and is included as a standard and routine expense of Hays County to be included in each proposed budget within the foreseeable future. County Commissioners expect this to be an integral part of future budgets to be approved during the period of this Contract except for unanticipated needs or events which may prevent such payments against this Contract. However, County cannot guarantee the availability of funds, and enters into this Contract only to the extent such funds are made available. The Fiscal Year for County extends from October 1st of each calendar year to September 30th of the next calendar year.

3. FUNDING OUT: Despite anything to the contrary in this Contract, if, during budget planning and adoption, Commissioners Court fails to provide funding for this Contract for the following fiscal year of County, County may terminate this Contract after giving Contractor thirty (30) calendar days written notice that this Contract is terminated due to the failure to fund it.

4. INVOICING/PAYMENTS:
    a. Contractor shall provide County with an Internal Revenue Form W-9, Request for Taxpayer Identification Number and Certification, that is completed in compliance with the Internal Revenue Code and its rules and regulations before any Contract funds are payable.
    b. As a minimum, invoices shall include: (i) name, address, and telephone number of Contractor and similar information in the event payment is to be made to a different address; (ii) County Contract or Purchase Order number; (iii) identification of products or services as outlined in this Contract; (iv) quantity or quantities, applicable unit prices, total prices, and total amount; and (v) any additional payment information called for by this Contract. County will not pay invoices that are in excess of the amount authorized by the purchase order.
    c. Payment shall be made by check or warrant by County upon satisfactory delivery and acceptance of products and services and submission of an invoice to the address below:
    County Auditor
    712 S Stagecoach Trail, Suite 1071
    San Marcos, Texas 78666

d. Payment shall be deemed to have been made on the date of mailing of the check or warrant. For purposes of payment discounts, time will begin upon satisfactory delivery of products and services and/or submission of acceptable invoice, whichever is last. Partial payments will not be made unless specifically requested and approved by County prior to Contract award.
e. Accrual and payment of interest on overdue payments shall be governed by Tex. Gov't Code Ann., ch. 2251.

5. COUNTY TAXES: If the Contractor subsequently becomes delinquent in the payment of County taxes, it will be grounds for cancellation of the contract. Despite anything to the contrary, if the contractor is delinquent in payment of County property taxes at the time of invoicing, Contractor assigns any payments to be made for performance under this contract to the County Tax Assessor-Collector for the payment of delinquent taxes.

6. PROMPT PAYMENT ACT: TEX. GOV'T CODE ANN., ch 2251 (Vernon Supp. 1995) requires that payments be made within 30 calendar days. If County fails to pay within 30 days, interest on overdue amounts is subject to Chapter 2251, Texas Government Code. The law does not apply if the terms of a federal grant, contract, regulation, or statute prevent local governments from making timely payments with federal funds. Contractors and subcontractors must pay their suppliers interest if the supplier is not paid within 10 calendar days after the contractor or subcontractor receives payment. Contractors must apply for interest payments within 6 months of submitting a proper invoice if they believe such interest was due but not paid. Interest begins accruing 30 days after either of the following, whichever is later; (i) satisfactory delivery or performance has been completed, or, (ii) a correct invoice is received at the designated place.

7. FOB POINT: Delivery of all products under this contract, if any, shall be made Free on Board to final destination, at the address shown in this contract or as indicated on each Purchase Order placed against this contract. The title and risk of loss of the goods shall not pass to County until acceptance takes place at the F.O.B. point.

8. INSPECTION AND ACCEPTANCE: The County office or department receiving items pursuant to this contract shall inspect and accept only those items that are satisfactory to them, and reject those items which are damaged or which do not conform to specifications. Contractor shall be responsible for the proper labeling, packing, and delivery to final destination, including replacement of rejected deliveries.

9. VARIATION IN QUANTITY: No variation in the quantity of any item called for by this contract will be accepted unless such variation has been caused by conditions of loading, shipping, or packing, or allowances in manufacturing processes, and then only to the extent, if any, specified elsewhere in this contract.

10. OFFICIALS NOT TO BENEFIT: If a member of Commissioners Court belongs to a cooperative association, the County may purchase equipment or supplies from the association only if no member of the Commissioners Court will receive a pecuniary benefit from the purchase, other than as reflected in an increase in dividends distributed generally to members of the association.

11. NONDISCRIMINATION; CIVIL RIGHTS/ADA COMPLIANCE:
    a. Contractor shall not engage in employment practices that have the effect of discriminating against employees or prospective employees because of age, race, color, sex, creed, national origin or handicapped condition.
    b. Contractor shall provide all services and activities required in a manner that would comply with the Civil Rights Act of 1964, as amended, the Rehabilitation Act of 1973, Public Law 93-1122, Section 504, and with the provisions of the Americans with Disabilities Act of 1990, Public Law 101-336 [S.933] if Contractor were an entity bound to comply with these laws.

12. CHANGES:
    a. This Contract may be amended only by written instrument signed by both County and Contractor. It is acknowledged by Contractor that NO OFFICIAL, EMPLOYEE, AGENT OR REPRESENTATIVE OF COUNTY

HAS ANY AUTHORITY, EITHER EXPRESS OR IMPLIED, TO CHANGE THE SCOPE OF THIS CONTRACT OR OTHERWISE AMEND THIS CONTRACT, OR ANY ATTACHMENTS HERETO, UNLESS EXPRESSLY GRANTED THAT AUTHORITY BY THE COMMISSIONERS COURT.

b. Contractor shall submit all requests for changes to this Contract or any attachment(s) to it to the Purchasing Manager. The Purchasing Manager shall present Contractor's requests to Commissioners Court for consideration.

13. REPRESENTATIONS:
    a. Contractor represents that he has thoroughly examined the drawings, specifications, schedule, instructions and all other contract documents. Contractor has made all investigations necessary to be thoroughly informed regarding plant and facilities for delivery of material, equipment and/or services as required by the proposal conditions.
    b. The Contractor's delivery time includes weekends and holidays.
    c. Contractor certifies that he is a qualified, bondable business entity that he is not in receivership or contemplates it, and has not filed for bankruptcy. He further certifies that the Company, Corporation, Partnership, or Sole Proprietorship is not delinquent with respect to payment of County property taxes.
    d. Contractor warrants that all applicable patents and copyrights which may exist on items that will be supplied under the contract have been adhered to and further warrants that County shall not be liable for any infringement of those rights. Warranties granted County shall apply for the duration of this contract or for the life of equipment or supplies purchased, whichever is longer. County must not extend use of the granted exclusive rights to any other than County employees or those with whom County has established a relationship aimed at furthering the public interest, and then only for official public uses. County will not knowingly or intentionally violate any applicable patent, license, or copyright. Contractor must indemnify County, its officers, agents, and employees against all claims, suits, and liability of every kind, including all expenses of litigation, court costs, and attorney's fees arising in connection with any alleged or actual infringement of existing patents, licenses or copyrights applicable to items sold.
    e. The Contractor warrants that upon execution of a contract with the County, he will not engage in employment practices which have the effect of discriminating against employees or prospective employees because of age, religion, race, color, sex, creed, handicap, or national origin and will submit reports as the County may require to assure compliance.
    f. Contractor warrants to County that all items delivered and all services rendered will conform to the specifications, drawings, or other descriptions furnished or incorporated by reference, and will be of merchantable quality, good workmanship, and free from defects. Contractor further agrees to provide copies of applicable warranties or guarantees to the Purchasing Manager. Copies will be provided within 10 days after the Notice of Award is issued. Return of merchandise under warranty shall be at Contractor's expense.

14. SUBCONTRACTS:
    a. Contractor shall not enter into any subcontracts for any service or activity relating to the performance of this Contract without the prior written approval or the prior written waiver of this right of approval from County. IT IS ACKNOWLEDGED BY CONTRACTOR THAT NO OFFICER, AGENT, EMPLOYEE OR REPRESENTATIVE OF COUNTY HAS THE AUTHORITY TO GRANT SUCH APPROVAL OR WAIVER UNLESS EXPRESSLY GRANTED THAT SPECIFIC AUTHORITY BY THE COMMISSIONERS COURT.
    b. If a subcontract is approved, Contractor must make a "good faith" effort to take all necessary and reasonable steps to insure HUBs maximum opportunity to be subcontractors under this Contract. Contractor must obtain County approval of all proposed HUB subcontractors through the Purchasing Manager. Failure by Contractor to make a good faith effort to employ HUBs as subcontractors constitutes a breach of this Contract and may result in termination of this Contract.

15. ASSIGNMENT:
    a. The parties to this Contract shall not assign any of the rights or obligation hereunder without the prior written consent of the other party. No official, employee, representative or agent of County has the

authority to approve any assignment under this Contract unless that specific authority is expressly granted by Commissioners Court.

b. The terms, provisions, covenants, obligations and conditions of this Contract are binding upon and inure to the benefit of the successors in interest and the assigns of the parties to this Contract if the assignment or transfer is made in compliance with the provisions of this Contract.

c. Contractor remains responsible for the performance of this Contract when there is a change of name or change of ownership. If a change of name is required, the Purchasing Manager shall be notified immediately. No change in the obligation of or to Contractor will be recognized until it is approved by Commissioners Court.

16. DISPUTES AND APPEALS: The Purchasing Manager acts as the County representative in the issuance and administration of this contract in relation to disputes. Any document, notice, or correspondence not issued by or to the Purchasing Manager or other authorized County person, in relation to disputes is void unless otherwise stated in this contract. If the Contractor does not agree with any document, notice, or correspondence issued by the Purchasing Manager, or other authorized County person, the Contractor must submit a written notice to the Purchasing Manager within ten (10) calendar days after receipt of the document, notice, or correspondence, outlining the exact point of disagreement in detail. If the matter is not resolved to the Contractor's satisfaction, Contractor may submit a written Notice of Appeal to the Commissioners Court, through the Purchasing Manager, if the Notice is submitted within ten (10) calendar days after receipt of the unsatisfactory reply. Contractor then has the right to be heard by Commissioners Court.

17. MEDIATION: When mediation is acceptable to both parties in resolving a dispute arising under this Agreement, the parties agree to use a mutually agreed upon mediator, or a person appointed by a court of competent jurisdiction, for mediation as described in Section 154.023 of the Texas Civil Practice and Remedies Code. Unless both parties are satisfied with the result of the mediation, the mediation will not constitute a final and binding resolution of the dispute. All communications within the scope of the mediation shall remain confidential as described in §154.073 of the Texas Civil Practice and Remedies Code, unless both parties agree, in writing, to waive the confidentiality.

18. FORCE MAJEURE: If the performance by either party of any of its obligations under this Contract is interrupted or delayed due to an act of God or the common enemy or as the result of war, riot, civil commotion, sovereign conduct, or the act or conduct of any person or persons not a party to this Contract, then it shall be excused from performance for such period of time as is reasonably necessary to remedy the effects thereof.

19. NON-WAIVER OF DEFAULT:
    a. No payment, act or omission by County may constitute or be construed as a waiver of any breach or default of Contractor which then exists or may subsequently exist. No official, agent, employee or representative of County may waive any breach of any term or condition of this Contract unless expressly granted that specific authority by the Commissioners Court.
    b. All rights of County under this Contract are specifically reserved and any payment, act or omission shall not impair or prejudice any remedy or fight to County under it. Any right or remedy in this Contract shall not preclude the exercise of any other right or remedy under this Contract or under any law, nor shall any action taken in the exercise of any right or remedy be deemed a waiver of any other rights or remedies.

20. TERMINATION FOR DEFAULT: Failure by either County or Contractor to perform any provisions of this Contract shall constitute a breach of contract. Either party may require corrective action within ten (10) calendar days after date of receipt of written notice citing the exact nature of the other's breach. Failure to take corrective action or failure to provide a satisfactory written reply excusing such failure within the ten (10) calendar days shall constitute a default. The defaulting party shall be given a twenty (20) calendar day period within which to show cause why this Contract shall not be terminated for default. All notices for corrective action, breach, default or show cause on behalf of County shall be issued by the Purchasing Manager or County legal

representative only, and all replies to the same shall be made in writing to the County Purchasing Manager or County legal representative at the address provided herein. Notices issued by or to anyone other than the Purchasing Manager or County legal representative shall be null and void, and shall be considered as not having been issued or received. County reserves the right to enforce the performance of this Contract in any manner prescribed by law in case of default and may contract with another party with or without competition or further notification to the contractor. At a minimum, Contractor shall be required to pay any difference in the cost of securing the services covered by this Contract, or compensate for any loss or damage to the County derived hereunder if it becomes necessary to contract with another source because of a default, plus reasonable administrative costs and attorney's fees. In the event of termination for default, County, its agents or representatives, shall not be liable for loss of any profits anticipated under this Contract.

21. TERMINATION FOR CONVENIENCE: County reserves the right to terminate this Contract upon thirty (30) days written notice for any reason deemed by the Commissioners Court to serve the public interest, or resulting from any governmental law, ordinance, regulation, or court order. Termination for convenience shall not be exercised with the sole intention of awarding the same or similar contract requirements to another source. In the event of such termination, County shall pay Contractor those costs directly attributable to work done in preparation for compliance with this Contract prior to termination; provided, however, that no costs shall be paid which are recoverable in the normal course of the business in which Contractor is engaged, nor shall County pay any costs which can be mitigated through the sale of supplies or inventories. If County pays for the cost of supplies or materials obtained for use under this Contract those supplies or materials shall become the property of County and shall be delivered to the FOB point shown in this Contract, or as designated by the Purchasing Manager. County shall not be liable for loss of any profits anticipated under this Contract.

22. GRATUITIES: Contractor shall not provide any gratuity in any form, including entertainment, gifts, or otherwise, to any employee, buyer, agent, or representative of County with a view to securing a contract, or securing favorable treatment with respect to the award or amendment, or the making of any determination with respect to the performance of this Contract. County may terminate this Contract if it is found that gratuities of any kind including entertainment, or gifts were offered or given by the Contractor or any agent or representative of the Contractor, to any County Official or employee with a view toward securing favorable treatment with respect of this contract. If this Contract is terminated by the County pursuant to this provision, County shall be entitled, in addition to any other rights and remedies, to recover from the Contractor at least three times the cost incurred by Contractor in providing the gratuities.

23. COVENANT AGAINST CONTINGENT FEES: Contractor represents and warrants that no persons or selling agency has been retained to solicit this Contract upon an understanding for a commission, percentage, brokerage, or contingent fee, excepting bona fide employees or bona fide established commercial selling agencies maintained by the Contractor to secure business. For breach or violation of this warranty, County shall have the right to terminate this Contract without liability, or in its discretion to, as applicable, add to or deduct from the Contract price for consideration, or otherwise recover, the full amount of such commission, percentage, brokerage, or contingent fee.

24. COUNTY ACCESS: Contractor shall maintain and make available for inspection, audit or reproduction by any authorized representative of County all books, documents, and other evidence pertinent to the costs and expenses of this Contract, including but not limited to both direct and indirect costs, cost of labor, material, equipment, supplies, and services, and all other costs and expenses of whatever nature for which reimbursement is claimed under this Contract. All required records shall be maintained until an audit is completed and all required questions arising therefrom are resolved, or three (3) years after completion of the contract term, whichever occurs first; provided, however, the records will be retained beyond the third year if an audit is in progress or the finding of a completed audit have not been resolved satisfactorily.

25. FORFEITURE OF CONTRACT:

a. The selected Offeror must forfeit all benefits of the contract and County must retain all performance by the selected Offeror Contractor and recover all consideration or the value of all consideration paid to the selected Offeror pursuant to the contract if:
b. The selected Offeror was doing business at the time of submitting its proposal offer or had done business during the 365- day period immediately prior to the date on which its proposal offer was due with one or more Key Contracting Persons if the selected Offeror failed to disclose the name of any such Key Contracting Person in its offer; or
c. The selected Offeror does business with a Key Contracting Person after the date on which the offer that resulted in the contract is submitted and prior to full performance of the contract.

26. CONTRACTOR CLAIMS NOTIFICATION:
    a. If any claim, or other action, that relates to Contractor's performance under this Contract, including proceedings before an administrative agency, is made or brought by any person, firm, corporation, or other entity against Contractor, Contractor shall give written notice to County of the following information within ten (10) working days after being notified of it:
        i. The existence of the claim, or other action;
        ii. The name and address of the person, firm, corporation or their entity that made a claim or that instituted any type of action or proceeding;
        iii. The alleged basis of the claim, action or proceeding;
        iv. The court or administrative tribunal, if any, where the claim, action or proceeding was instituted; and
        v. The name or names of any person against whom this claim is being made.
    b. Except as otherwise directed, Contractor shall furnish to County copies of all pertinent papers received by Contractor with respect to making these claims or actions and all court pleadings related to the defense of these claims or actions.

27. CERTIFICATION OF ELIGIBILITY: This provision applies if the anticipated Contract exceeds $100,000. By submitting a bid or proposal in response to this solicitation, the bidder/respondent certifies that at the time of submission, he/she is not on the Federal Government's Excluded Parties List System (www.epls.gov), which details a listing of suspended, ineligible, or debarred contractors. In the event of placement on the list between the time of bid/proposal submission and time of award, the bidder/respondent will notify the Hays County Purchasing Manager. Failure to do so may result in terminating this Contract for default.

28. CONTRACTOR LIABILITY, INDEMNIFICATION AND CLAIMS NOTIFICATION: Contractor shall indemnify County, its officers, agents, and employees, from and against any and all third party claims, losses, damages, causes of action, suits, and liability of every kind whether meritorious or not and, including all expenses of litigation, court costs, and reasonable attorney's fees, arising in connection with the services provided by Contractor under this Contract. It is the expressed intention of the Parties to this Contract, both Contractor and County, that the indemnity provided for in this paragraph is indemnity by Contractor to indemnify and protect County from the consequences of Contractor's actions.

29. CONSTRUCTION OF CONTRACT:
    a. This Contract is governed by the laws of the United States of America and the State of Texas and all obligations under this Contract are performable in Hays County, Texas. Venue for any dispute arising out of this Contract will lie in the appropriate court of Hays County, Texas.
    b. If any portion of this Contract is ruled invalid, illegal, or unenforceable in any respect by a court of competent jurisdiction, the remainder of it shall remain valid and binding.
    c. Headings and titles at the beginning of the various provisions of this Contract have been included only to make it easier to locate the subject matter covered by that part, section or subsection and are not to be used in construing this Contract.
    d. When any period of time is stated in this Contract, the time shall be computed to exclude the first day and include the last day of period. If the last day of any period falls on a Saturday, Sunday, or a day that

Hays County has declared a holiday for its employees, these days shall be omitted from the computation. All hours in this Contract are stated in Central Standard Time from 2:00 o'clock a.m. on the first Sunday of November until 2:00 o'clock a.m. on the second Sunday of March and in Central Daylight Saving Time from 2:00 o' clock a.m. on the second Sunday of March until 2:00 o'clock a.m. on the first Sunday of November or such other dates as may be adopted for the activation of Daylight Savings Time in the United States in future years.

e. Words of any gender in this Contract shall be construed to include any other gender and words in either number shall be construed to include the other unless the context clearly requires otherwise.
f. Provisions, Words, Phrases, and Statutes, whether incorporated by actual use or by reference, shall be applied to this Contract in accordance with Texas Government Code, §§ 312.002 and 312.003.

30. ADDITIONAL GENERAL PROVISIONS:
    a. Contractor must comply with all Federal and State laws and regulations, City and County ordinances, orders, and regulations, relating in any way to this Contract.
    b. Contractor must secure all permits and licenses, pay all charges and fees, and give all notices necessary for lawful operations.
    c. Contractor must pay all taxes and license fees imposed by the Federal and the State Governments and their agencies and political subdivisions upon the property and business of Contractor.
    d. Despite anything to the contrary in this Contract, if the Contractor is delinquent in payment of property taxes at the time of providing services, Contractor assigns the amount of any payment to be made for services provided under this Contract equal to the amount Contractor is delinquent in property tax payments to the Hays County Tax Assessor-Collector for the payment of the delinquent taxes.
    e. In this subsection, "County Building" means any County-owned buildings and does not include buildings leased by County. Contractor must not execute any mortgage, or issue any bonds, shares of stock, or other evidence of interest in County Buildings.

31. INTERPRETATION OF CONTRACT:
    a. This document contains the entire agreement between the parties relating to the rights granted and the obligations assumed. Any prior agreements or representations not expressly set forth in this agreement are of no force. Any oral representations or modifications concerning this agreement shall be of no force except a subsequent modification in writing signed by the Purchasing Manager. No official, representative, employee, or agent of the County has any authority to modify or amend this contract except pursuant to specific authority to do so granted by the Commissioners Court.
    b. If inconsistency exists between provisions of this solicitation, the inconsistency shall be resolved by giving precedence in the following ascending order of precedence:
        i. The Schedule of Items/Services
        ii. Terms and Conditions of Request for Proposals;
        iii. General Provisions;
        iv. Other provisions, whether incorporated by reference or otherwise; and
        v. The specifications.
    c. If any contract provision shall for any reason be held invalid, illegal, or unenforceable in any respect, invalidity, illegality, or unenforceability shall not affect any other provision, and this contract shall be construed as if invalid, illegal or unenforceable provision had never been contained.
    d. This contract shall be governed by the laws of Texas and all obligations are performable in Hays County, Texas.
    e. If a word is used with reference to a particular trade or subject matter or is used as a word of art, the word shall have the meaning given by experts in that particular field.
    f. Words in the present or past tense include the future tense. The singular includes the plural and the plural includes the singular. The masculine gender includes the feminine and neuter genders.
    g. The headings in this contract have been included only to make it easier to locate the subject covered by each provision and are not to be used in construing this contract.

h. Provisions, words, phrases, and statutes, whether incorporated by actual use or by reference, shall be applied to this contract in accordance with TEX. GOV'T CODE ANN., SEC 312.002, 312.003 (Vernon 1991).

32. MODIFICATIONS:
    a. The County Purchasing Manager may at any time, by written order, and without notice to the sureties, if any, make changes within the general scope of this contract in any one of the following:
        i. Drawings, designs or specifications when the supplies to be furnished are to be specifically manufactured for the County in accordance with the drawings, designs, or specifications.
        ii. Method of shipment or packing.
        iii. Place of deliveries.
        iv. Correction of errors of a general administrative nature or other mistakes, the correction of which does not affect the scope of the contract, or does not result in expense to the Contractor.
        v. Description of items to be provided.
        vi. Time of performance (i.e. hours of day, days of week, etc)
    b. If any such change causes an increase or decrease in the cost of, or time required for, performance of any part of the work under this contract whether, or not changed by the order, the Commissioners Court shall make an equitable adjustment in the contract price, the delivery schedule, or both, and shall modify the contract. The Contractor must submit any "proposal for adjustment" under this clause within thirty (30) calendar days from the date of receipt of the written order. However, if the County Purchasing Manager decides that the facts justify it, the County Purchasing Manager may receive and act upon a proposal submitted before final payment of the contract. If the Contractor's proposal includes the cost of property made obsolete or excess by the change, the County shall have the right to prescribe the manner of disposition of the property. Failure to agree to any adjustment shall be a dispute under the Disputes and Appeals clause. However, nothing in this clause shall excuse the Contractor from proceeding with the contract as changed.

33. PRICE CHANGES: The prices offered shall remain firm for the period of the contract. The prices offered shall also remain firm for the option years should the County choose to exercise the option to renew, except for changes that are industry wide and beyond the control of the contractor. Any price increase proposed must be submitted forty-five (45) calendar days prior to the anniversary date of the annual term contract and shall be supported with proper documentation. Hays County will have fifteen (15) days, from the receipt of proposed price increases, to review any proposed price increases and reserves the right to approve or disapprove any request for increased prices. If Hays County disapproves the proposed price increases, the County will issue an intent to terminate, and the contract will not be renewed.

34. INSURANCE AND LIABILITY: During the period of this contract, contractor shall maintain at his expense, insurance with limits not less than those prescribed below. With respect to required insurance, Contractor shall;
    a. Name County as additional insured as its interests may appear.
    b. Provide County a waiver of subrogation.
    c. Provide County with a thirty (30) calendar day advance written notice of cancellation or material change to said insurance.
    d. Provide the County Purchasing Manager at the address shown on Page 1 of this contract, a Certificate of Insurance evidencing required coverage within ten (10) calendar days after receipt of Notice of Award. Also, please assure your certificate contains the contract number as indicated on the Contract Award form when issued by Hays County.
    e. Submit an original certificate of insurance reflecting coverage as follows:

Automobile Liability:	
Bodily Injury (Each person)	$1,000,000.00
Bodily Injury (Each accident)	$1,000,000.00
Property Damage	$1,000,000.00

Commercial General Liability (Including Contractual Liability):	
General Aggregate	$2,000,000.00
Product completed operations aggregate	$2,000,000.00
Bodily Injury (Each accident)	$2,000,000.00
Property Damage	$2,000,000.00

Employers Liability:	
Each accident	$1,000,000.00
Each employee for disease	$1,000,000.00
Policy limit for disease	$1,000,000.00

Excess Liability:	
Umbrella Form	$1,000,000.00

Labor Liability:	
Worker's Compensation	Meeting Statutory Requirements

V. Vendor Reference Form

Please list three (3) references of current customers who can verify the quality of service your company provides. The County prefers customers of similar size and scope of work to this proposal/bid. **This form must be returned with your bid/proposal.**

REFERENCE ONE

Company Name: _____

Address: _____

Contact Person and Title: _____

Phone Number: _____

Scope & Duration of Contract: _____

Email: _____

REFERENCE TWO

Company Name: _____

Address: _____

Contact Person and Title: _____

Phone Number: _____

Scope & Duration of Contract: _____

Email: _____

REFERENCE THREE

Company Name: _____

Address: _____

Contact Person and Title: _____

Phone Number: _____

Scope & Duration of Contract: _____

Email: _____

VI. Certificate of Interested Parties

In 2015, the Texas Legislature adopted House Bill 1295, which added 2252.908 to the Texas Government Code and applies to all contracts entered into on or after January 1, 2016. Section 2252.908 (b)(1)(2) applies only to a contract of a governmental entity or state agency that requires an action or vote by the governing body of the entity or agency before the contract may be signed or that has a value of at least $1 million. In addition, pursuant to Section 2252.908 (d), a governmental entity or state agency may not enter into a contract described by Subsection (b) with a business entity unless the business entity, in accordance with this section and rules adopted under this section, submits a disclosure of interested parties to the governmental entity or state agency at the time the business entity submits the signed contract to the governmental entity or state agency.

With regard to Hays County purchases, a vendor or other person who is awarded a contract or purchase approved by Hays County Commissioners Court is required to electronically complete a Form 1295 through the Texas Ethics Commission website at https://ethics.state.tx.us/whatsnew/elf_info_form1295.htm and submit a signed copy of the form to the Hays County Purchasing office. A contract, including County issued purchase order (if applicable), will not be enforceable or legally binding until the County received and acknowledges receipt of the properly completed Form 1295 from the awarded vendor.

If you do not have access to the link provided above please or have any questions please contact Purchasing at 512-393-2267.

VII. Conflict of Interest Questionnaire

CONFLICT OF INTEREST QUESTIONNAIRE

FORM CIQ

For vendor doing business with local governmental entity

This questionnaire reflects changes made to the law by H.B. 23, 84th Leg., Regular Session.

This questionnaire is being filed in accordance with Chapter 176, Local Government Code, by a vendor who has a business relationship as defined by Section 176.001(1-a) with a local governmental entity and the vendor meets requirements under Section 176.006(a).

By law this questionnaire must be filed with the records administrator of the local governmental entity not later than the 7th business day after the date the vendor becomes aware of facts that require the statement to be filed. *See* Section 176.006(a-1), Local Government Code.

A vendor commits an offense if the vendor knowingly violates Section 176.006, Local Government Code. An offense under this section is a misdemeanor.

OFFICE USE ONLY

Date Received

1 **Name of vendor who has a business relationship with local governmental entity.**

2 ☐ **Check this box if you are filing an update to a previously filed questionnaire.** (The law requires that you file an updated completed questionnaire with the appropriate filing authority not later than the 7th business day after the date on which you became aware that the originally filed questionnaire was incomplete or inaccurate.)

3 **Name of local government officer about whom the information is being disclosed.**

Name of Officer

4 **Describe each employment or other business relationship with the local government officer, or a family member of the officer, as described by Section 176.003(a)(2)(A). Also describe any family relationship with the local government officer. Complete subparts A and B for each employment or business relationship described. Attach additional pages to this Form CIQ as necessary.**

A. Is the local government officer or a family member of the officer receiving or likely to receive taxable income, other than investment income, from the vendor?

☐ Yes ☐ No

B. Is the vendor receiving or likely to receive taxable income, other than investment income, from or at the direction of the local government officer or a family member of the officer AND the taxable income is not received from the local governmental entity?

☐ Yes ☐ No

5 **Describe each employment or business relationship that the vendor named in Section 1 maintains with a corporation or other business entity with respect to which the local government officer serves as an officer or director, or holds an ownership interest of one percent or more.**

6 ☐ Check this box if the vendor has given the local government officer or a family member of the officer one or more gifts as described in Section 176.003(a)(2)(B), excluding gifts described in Section 176.003(a-1).

7

Signature of vendor doing business with the governmental entity

Date

Form provided by Texas Ethics Commission www.ethics.state.tx.us Revised 1/1/2021

CONFLICT OF INTEREST QUESTIONNAIRE
For vendor doing business with local governmental entity

A complete copy of Chapter 176 of the Local Government Code may be found at http://www.statutes.legis.state.tx.us/Docs/LG/htm/LG.176.htm. For easy reference, below are some of the sections cited on this form.

Local Government Code § 176.001(1-a): "Business relationship" means a connection between two or more parties based on commercial activity of one of the parties. The term does not include a connection based on:

(A) a transaction that is subject to rate or fee regulation by a federal, state, or local governmental entity or an agency of a federal, state, or local governmental entity;

(B) a transaction conducted at a price and subject to terms available to the public; or

(C) a purchase or lease of goods or services from a person that is chartered by a state or federal agency and that is subject to regular examination by, and reporting to, that agency.

Local Government Code § 176.003(a)(2)(A) and (B):

(a) A local government officer shall file a conflicts disclosure statement with respect to a vendor if:

***

(2) the vendor:

(A) has an employment or other business relationship with the local government officer or a family member of the officer that results in the officer or family member receiving taxable income, other than investment income, that exceeds $2,500 during the 12-month period preceding the date that the officer becomes aware that

(i) a contract between the local governmental entity and vendor has been executed; or

(ii) the local governmental entity is considering entering into a contract with the vendor;

(B) has given to the local government officer or a family member of the officer one or more gifts that have an aggregate value of more than $100 in the 12-month period preceding the date the officer becomes aware that:

(i) a contract between the local governmental entity and vendor has been executed; or

(ii) the local governmental entity is considering entering into a contract with the vendor.

Local Government Code § 176.006(a) and (a-1)

(a) A vendor shall file a completed conflict of interest questionnaire if the vendor has a business relationship with a local governmental entity and:

(1) has an employment or other business relationship with a local government officer of that local governmental entity, or a family member of the officer, described by Section 176.003(a)(2)(A);

(2) has given a local government officer of that local governmental entity, or a family member of the officer, one or more gifts with the aggregate value specified by Section 176.003(a)(2)(B), excluding any gift described by Section 176.003(a-1); or

(3) has a family relationship with a local government officer of that local governmental entity.

(a-1) The completed conflict of interest questionnaire must be filed with the appropriate records administrator not later than the seventh business day after the later of:

(1) the date that the vendor:

(A) begins discussions or negotiations to enter into a contract with the local governmental entity; or

(B) submits to the local governmental entity an application, response to a request for proposals or bids, correspondence, or another writing related to a potential contract with the local governmental entity; or

(2) the date the vendor becomes aware:

(A) of an employment or other business relationship with a local government officer, or a family member of the officer, described by Subsection (a);

(B) that the vendor has given one or more gifts described by Subsection (a); or

(C) of a family relationship with a local government officer.

Form provided by Texas Ethics Commission www.ethics.state.tx.us Revised 1/1/2021

VIII. CODE OF ETHICS FOR HAYS COUNTY

Public employment is a public trust. It is the policy of Hays County to promote and balance the objective of protecting government integrity and the objective of facilitating the recruitment and retention of personnel needed by Hays County. Such a policy implemented by prescribing essential standards of ethical conduct without creating unnecessary obstacles to entering public services.

Public servants must discharge their duties impartially so as to assure fair competitive access to governmental procurement by responsible contractors. Moreover, they should conduct themselves in such a manner as to foster public confidence in the integrity of the Hays County procurement organization.

To achieve the purpose of this article, it is essential that those doing business with Hays County also observe the ethical standards prescribed here.

It shall be a breach of ethics to attempt to influence any public employee, elected official or department head to breach the standards of ethical conduct set forth in this code.

It shall be a breach of ethics for any employee of Hays County or a vendor doing business with the county to participate directly or indirectly in a procurement when the employee or vendor knows that:

The employee or any member of the employee's immediate family, or household has a substantial financial interest pertaining to the procurement. This means ownership of 10% or more of the company involved and/or ownership of stock or other interest or such valued at $2500.00 or more.

A business or organization in which the employee, or any member of the employee's immediate family, has a financial interest pertaining to the procurement.

Gratuities: It shall be a breach of ethics to offer, give or agree to give any employee of Hays County or for any employee to solicit, demand, accept or agree to accept from a vendor, a gratuity of consequence or any offer of employment in connection with any decision approval, disapproval, recommendation, preparation or any part of a program requirement or purchase request influencing the content of any specification or procurement standard, rendering of advice, investigation, auditing, or in any other advisory capacity in any proceeding or controversy, any particular matter pertaining to any program requirement or a contract or subcontract, or to any solicitation or proposal therefore pending before this government.

Kickbacks: It shall be a breach of ethics for any payment, gratuity or offer of employment to be made by or on behalf of a subcontractor under a contract to the prime contractor or higher tier subcontractor for any contract for Hays County as an inducement for the award of a contract or order.

Contract Clause: The prohibition against gratuities and kickbacks prescribed above shall be conspicuously set forth in every contract and solicitation therefore.

Any effort to influence any employee, elected official, or department head to violate the standards of the code is grounds to void the contract. Please certify, by your signature below, that you understand the ethics policy of Hays County and in no way will attempt to violate the code.

SIGNATURE: _____

PRINT NAME & TITLE: _____

COMPANY NAME: _____

IX. Hays County Practices Related to Historically Underutilized Businesses

1. STATEMENT OF PRACTICES

Hays County will strive to ensure that all businesses, regardless of size, economic, social or ethnic status have an equal opportunity to participate in the County's procurement processes. The County is committed to promote full and equal business opportunity for all businesses to supply the goods and services needed to support the mission and operations of county government, and seeks to encourage the use of certified historically underutilized businesses (HUB's) through the use of race, ethnic and gender neutral means. It is the practice of Hays County to involve certified HUBs to the greatest extent feasible in the County's procurement of goods, equipment, services and construction projects while maintaining competition and quality of work standards. The County affirms the good faith efforts who recognize and practice similar business standards.

2. DEFINITIONS

Historically underutilized businesses (HUBs), also known as a disadvantaged business enterprise (DBE), are generally business enterprises at least 51% of which is owned and the management and daily business operations are controlled by one or more persons who is/are socially and economically disadvantaged because of his/her identification as a member of certain groups, including women, Black Americans, Mexican Americans, and other Americans if Hispanic origin, Asian Americans and American Indians.

Businesses include firms, corporations, sole proprietorships, vendors, suppliers, contractors, subcontractors, professionals and other similar references when referring to a business that provides goods and/or services regardless of the commodity category.

Certified HUB's include business enterprises that meet the definition of a HUB and who meet the certification requirements of certification agencies recognized by Hays County, as expressed below.

Statutory bid limit refers to the Texas Local Government Code provision that requires competitive bidding for many items valued at greater than $50,000.

3. GUIDELINES

a. Hays County, its contractors, their subcontractors and suppliers, as well as all vendors of goods, equipment and services, shall not discriminate on the basis of race, color, creed, gender, age, religion, national origin, citizenship, mental or physical disability, veteran's status or political affiliation in the award and/or performance of contracts. All entities doing business or anticipating doing business with the County shall support, encourage and implement affirmative steps toward a common goal of establishing equal opportunity for all citizens and businesses of the County.

b. Vendors and/or contractors desiring to participate in the HUB program must successfully complete the certification process with the State of Texas or Texas Unified Certification Program. The vendor or contractor is also required to hold a current valid certification (title) from either of these entities.

c. Vendors and/or contractors must be registered with the State Comptroller's web-based HUB directory and with the Comptroller's Centralized Master Bidder's List (CMBL). Hays County will solicit bids from certified HUB's for state purchasing and public works contracts.

4. Hays County will actively seek and encourage HUBs to participate in all facets of the procurement process by:
    a. Continuing to increase and monitor a database of certified HUB vendors, professionals and contractors. The database will be expanded to include products, areas of expertise and capabilities of each HUB firm.
    b. Continuing to seek new communication links with HUB vendors, professionals and contractors to involve them in the procurement process.
    c. Continuing to advertise bids on the County's website and in the newspapers including newspapers that target socially and economically disadvantaged communities.
5. As prescribed by law, the purchase of one or more items costing in excess of the statutory bid limit must comply with the competitive bid process. Where possible, those bids will be structured to include and encourage the participation of HUB firms in the procurement process by:
    a. Division of proposed requisitions into reasonable lots in keeping with industry standards and competitive bid requirements.
    b. Where feasible, assessment of bond and insurance requirements and the designing of such requirements to reasonably permit more than one business to perform the work.
    c. Specifications of reasonable, realistic delivery schedules consistent with the County's actual requirements.
    d. Specifications, terms and conditions reflecting the County's actual requirements are clearly stated, and do not impose unreasonable or unnecessary contract requirements.
6. A HUB practice statement shall be included in all specifications. The County will consider the bidder's responsiveness to the HUB Practices in the evaluation of bids and proposals. Failure to demonstrate a good faith effort to comply with the County's HUB practices may result in a bid or proposal being considered non-responsive to specifications.
7. Nothing in this practice statement shall be construed to require the County to award a contract other than to the lowest responsive bidder as required by law. This practice is narrowly tailored in accordance with applicable law.

Please sign for acknowledgement of the Hays County HUB Practices:

_____ _____

Signature Date

X. Hays County House Bill 89 Verification

I, _____ (Person name), the undersigned representative of _____(Company or Business name, hereafter referred to as Company) being an adult over the age of eighteen (18) years of age, after being duly sworn by the undersigned notary, do hereby depose and verify under oath that the company named above, under the provisions of Subtitle F, Title 10, Government Code Chapter 2270:

1. Does not boycott Israel currently; and
2. Will not boycott Israel during the term of the contract.

Pursuant to Section 2270.001, Texas Government Code:

1. *"Boycott Israel" means refusing to deal with, terminating business activities with, or otherwise taking any action that is intended to penalize, inflict economic harm on, or limit commercial relations specifically with Israel, or with a person or entity doing business in Israel or in an Israeli-controlled territory, but does not include an action made for ordinary business purposes; and*

2. *"Company" means a for-profit sole proprietorship, organization, association, corporation, partnership, joint venture, limited partnership, limited liability partnership, or any limited liability company, including a wholly owned subsidiary, majority-owned subsidiary, parent company or affiliate of those entities or business associations that exist to make a profit.*

_____ _____

Signature of Company Representative Date

On this _____ day of _____, 20____, personally appeared _____, the above-named person, who after by me being duly sworn, did swear and confirm that the above is true and correct.

NOTARY SEAL

_____

Notary Public in and for the State of Texas

_____

Date

XI. Hays County Purchasing Department Senate Bill 252 Certification

Pursuant to Texas Government Code, Chapter 2252, Section 2252.152 and Section 2252.153, certify that the company named below is not listed on the website of the Comptroller of the State of Texas concerning the listing of companies that are identified under Section 806.051, Section 807.051 or Section 2253.153. I further certify that should the above-named company enter into a contract that is on said listing of companies on the website of the Comptroller of the State of Texas which do business with Iran, Sudan or any Foreign Terrorist Organization, I will immediately notify the Hays County Purchasing Department.

_____

Company Name

_____

Print Name of Company Representative

_____

Signature of Company Representative

_____

Date

CERTIFICATION CHECK PERFORMED BY HAYS COUNTY PURCHASING:

On this day, the Purchasing Representative for Hays County in San Marcos, Texas, pursuant to Texas Government Code, Chapter 2252, Section 2252.152, Section 2252.153 and Chapter 2270, certify that I did review the website of the Comptroller of the State of Texas concerning the listing of companies that is identified under Section 806.051, Section 807.051, Chapter 808, Section 809.051 or Section 2253.253 and I have ascertained that the above-named company is not contained on said listing of companies which do business with Iran, Sudan or any Foreign Terrorist Organization.

_____

Print Name of Hays County Purchasing Representative

_____

Signature of Hays County Purchasing Representative

_____

Date

_____

IFB/RFP/RFQ Number

XII. Debarment and Licensing Certification

STATE OF TEXAS §
§
COUNTY OF HAYS §

I, the undersigned, being duly sworn or under penalty of perjury under the laws of the United States and the State of Texas, certifies that Firm named herein below and its principals:

a. Are not presently debarred, suspended, proposed for debarment, declared ineligible or voluntarily excluded from covered transactions by any federal department or agency;
b. Have not within a three-year period preceding this proposal been convicted of or had a civil judgment rendered against them for commission of fraud or a criminal offense in connection with obtaining, attempting to obtain, or performing a public (federal, state or local) transaction or contract under a public transaction; violation of federal or state antitrust statutes or commission of embezzlement, theft, forgery, bribery, falsification or destruction of records, making false statements, or receiving stolen property;
c. Are not presently indicted for or otherwise criminally or civilly charged by a federal, state or local governmental entity with commission of any of the offenses enumerated in paragraph (1)(b) of this certification;
d. Have not within a three-year period preceding this application/proposal had one or more public (federal, state or local) transactions terminated for cause or default;
e. Are registered and licensed in the State of Texas to perform the professional services which are necessary for the project; and
f. Have not been disciplined or issued a formal reprimand by any State agency for professional accreditation within the past three years.

_____
Name of Firm

_____ _____
Signature of Certifying Official Title of Certifying Official

_____ _____
Printed Name of Certifying Official Date

Where the Firm is unable to certify to any of the statements in this certification, such Firm shall attach an explanation to this certification.

SUBSCRIBED and sworn to before me the undersigned authority by _____on this the day of _____, 20___, on behalf of said Firm.

_____
Notary Public in and for the State of Texas

My commission expires: _____

XIII. Vendor/Bidder's Affirmation

1. Vendor/Bidder affirms that they are duly authorized to execute this Contract, that this company, corporation, firm, partnership or individual has not prepared this bid in collusion with any other bidder, and that the contents of this bid as to price, terms or conditions of said bid have not been communicated by the undersigned nor by any employee or agent to any other person engages in this type of business prior to the official opening of this bid.

2. Vendor/Bidder hereby assigns to Purchaser any and all claims for overcharges associated with this Contract which arise under the antitrust laws of the United States, 15 USCA Section 1 et seq., and which arise under the antitrust laws of the State of Texas, Tex. Bus. & Com. Code, Section 15.01, et seq.

3. Pursuant to 262.0276 (a) of the Texas Local Government Code, Vendor/Bidder, hereby affirms that Vendor/Bidder:

   _____ Does not own taxable property in Hays County, or;

   _____ Does not owe any ad valorem taxes to Hays County or is not otherwise indebted to Hays County

_____
Name of Contracting Company

If taxable property is owned in Hays County, list property ID numbers:

_____

_____
Signature of Company Official Authorizing Bid/Offer

_____ _____
Printed Name Title

_____ _____
Email Address Phone

XIV. Related Party Disclosure Form

Hays County strives to provide financial transparency to its taxpayers. Completion of this form will allow for added transparency into the procurement process by disclosing Vendor relationships with current or former Hays County employees. The existence of a relationship may not present a legal or ethical conflict for a Vendor. However, disclosure will allow for consideration of potential conflicts and/or ways to eliminate conflicts.

A Vendor who Employs any of the following is required to disclose the relationship on this form:

- Current Hays County employee (including elected or appointed official) (Complete Section A)
- Former Hays County employee who has been separated from Hays County for no less than four (4) years (including elected or appointed official) (Complete Section B)
- Person related within the 2nd degree of consanguinity or affinity to either of the above[1] (Complete Section C)

If no known relationships exist, complete Section D.

This form is required to be completed in full and submitted with the proposal package. A submitted proposal package that does not include this completed form will be considered non-responsive and will not be eligible for an award.

Section A: Current Hays County Employee

_____

Employee Name Title

Section B: Former Hays County Employee

_____

Employee Name Title Date of Separation from County

Section C: Person Related to Current or Former Hays County Employee

_____

Employee or Former Employee Name Title

_____

Name of Related Person Title Relationship

Section D: No Known Relationships

If no relationships in accordance with the above exist or are known to exist, provide a written explanation below:

_____

_____

_____

Attach additional pages if necessary.

I, the undersigned, hereby certify that the information provided is true and complete to the best of my knowledge.

_____
Name of Vendor

_____ _____
Signature of Certifying Official Title of Certifying Official

_____ _____
Printed Name of Certifying Official Date

[1]A degree of relationship is determined under Texas Government Code Chapter 573. (as outlined below)

Relationship of Consanguinity				
	1st Degree	**2nd Degree**	**3rd Degree***	**4th Degree***
Person	child or parent	grandchild, sister, brother or grand-parent	great-grandchild, niece, nephew, aunt,* uncle* or great-grandparent	great-great-grandchild, grandniece, grandnephew, first cousin, great aunt,* great uncle* or great-great-grandparent
* An aunt, uncle, great aunt or great uncle is related to a person by consanguinity only if he or she is the sibling of the person's parent or grandparent.				

Relationship of Affinity		
	1st Degree	**2nd Degree**
Person	spouse, mother-in-law, father-in-law, son-in-law, daughter-in-law, stepson, stepdaughter, stepmother or stepfather	brother-in-law, sister-in-law, spouse's grandparent, spouse's grandchild, grandchild's spouse or spouse of grandparent

“Vendor” shall mean any individuals or entity that seeks to enter into a contract with Hays County.

“Employs” shall mean any relationship wherein Vendor has made arrangements to compensate an individual, directly or by way of a business organization in which the individual has a sharehold or ownership interest, even if that arrangement is contractual and/or on an hourly-charge basis.

XV. FEDERAL AFFIRMATIONS AND SOLICITATION ACCEPTANCE

In the event federal funds are used for payment of part or all of the consideration due under any contract resulting from this Solicitation Response, Respondent must execute this **Federal Affirmation and Solicitation Acceptance**, which shall constitute an agreement, without exception, to the following affirmations:

1. Debarment and Suspension (2 CFR 180.220)

Respondent certifies, by signing this Attachment, that neither it nor any of its principals or subcontractors are presently debarred, suspended, proposed for debarment, declared ineligible, or voluntarily excluded from participation in this transaction by any federal department or agency. This certification is made pursuant to the OMB guidelines at 2 CFR 180 that implement Executive Order 12549 (3 C.F.R. Part 1986 Comp., p. 189) and 12689 (3 C.F.R. Part 1989 Comp., p. 235), Debarment and Suspension, 28 C.F.R. pt. 67, § 67.510, as published as pt. VII of the May 26, 1988, Federal Register (pp. 19160-19211), and any relevant program-specific regulations. This provision shall be required of every subcontractor receiving any payment in whole or in part from federal funds.

2. Americans with Disabilities Act

Respondent and any potential subcontractors shall comply with all terms, conditions, and requirements of the Americans with Disabilities Act of 1990 (P.L. 101-136), 42 U.S.C. 12101, as amended, and regulations adopted thereunder contained in 28 C.F.R. 26.101-36.999, inclusive, and any relevant program- specific regulations.

3. Discrimination

Respondent and any potential subcontractors shall comply with all Federal statutes relating to nondiscrimination. These include, but are not limited to:

a. Title VI of the Civil Rights Act of 1964 (P.L. 88-352), which prohibits discrimination on the basis of race, color, or national origin;

b. Title IX of the Education Amendments of 1972, as amended (20 U.S.C. §§1681-1683, and 1685-1686), which prohibits discrimination on the basis of sex;

c. Section 504 of the Rehabilitation Act of 1973, as amended (29 U.S.C. §794), which prohibits discrimination on the basis of handicaps;

d. The Age Discrimination Act of 1975, as amended (42 U.S.C. §§6101- 6107), which prohibits discrimination on the basis of age;

e. The Drug Abuse Office and Treatment Act of 1972 (P.L. 92-255), as amended, relating to nondiscrimination on the basis of drug abuse;

f. The Comprehensive Alcohol Abuse and Alcoholism Prevention, Treatment and Rehabilitation Act of 1970 (P.L. 91-616), as amended, relating to nondiscrimination on the basis of alcohol abuse or alcoholism;

g. Sections 523 and 527 of the Public Health Service Act of 1912 (42 U.S.C. §§290 dd-3 and 290 ee-3), as amended, relating to confidentiality of alcohol and drug abuse patient records;

h. Title VIII of the Civil Rights Act of 1968 (42 U.S.C. §§3601 et seq.), as amended, relating to nondiscrimination in the sale, rental, or financing of housing;

i. Any other nondiscrimination provisions in the specific statute(s) under which application for Federal assistance is being made; and

j. The requirements of any other nondiscrimination statute(s) that may apply to the application.

4. Equal Employment Opportunity

Except as otherwise provided under 41 CFR Part 60, all contracts that meet the definition of "federally assisted construction contract" in 41 CFR Part 60-1.3 must include the equal opportunity clause provided under 41 CFR 60-1.4(b), in accordance with Executive Order 11246, "Equal Employment Opportunity" (30 FR 12319, 12935, 3 CFR Part, 1964-1965 Comp., p. 339), as amended by Executive Order 11375, "Amending Executive Order 11246 Relating to Equal Employment Opportunity," and implementing regulations at 41 CFR part 60, "Office of Federal Contract Compliance Programs, Equal Employment Opportunity, Department of Labor."

5. Wages

Under the Davis Bacon Act, 40 U.S.C. 276a – 276a-5 (40 U.S.C. 3141-3148), as amended, and the regulations adopted thereunder contained in 29 C.F.R. pt. 1 and 5. When required by Federal program legislation, all prime construction contracts in excess of $2,000 awarded by non-Federal entities must include a provision for compliance with the Davis-Bacon as supplemented by Department of Labor regulations (29 CFR Part 5, "Labor Standards Provisions Applicable to Contracts Covering Federally Financed and Assisted Construction"). Respondent and any potential subcontractors have a duty to and shall pay the prevailing wage rate specified in a wage determination made by the Secretary of Labor. In addition, contractors must be required to pay wages not less than once a week. The non-Federal entity must place a copy of the current prevailing wage determination issued by the Department of Labor in each solicitation. The decision to award a contract or subcontract must be conditioned upon the acceptance of the wage determination. The non-Federal entity must report all suspected or reported violations to the Federal awarding agency.

6. Contract Work Hours and Safety Standards Act (40 U.S.C. 3701-3708)

Where applicable, all contracts awarded by the non-Federal entity in excess of $100,000 that involve the employment of mechanics or laborers must include a provision for compliance with 40 U.S.C. 3702 and 3704, as supplemented by Department of Labor regulations (29 CFR Part 5). Under 40 U.S.C. 3702 of the Act, each contractor must be required to compute the wages of every mechanic and laborer on the basis of a standard work week of 40 hours. Work in excess of the standard work week is permissible provided that the worker is compensated at a rate of not less than one and a half times the basic rate of pay for all hours worked in excess of 40 hours in the work week. The requirements of 40 U.S.C. 3704 are applicable to construction work and provide that no laborer or mechanic must be required to work in surroundings or under working conditions which are unsanitary, hazardous or dangerous. These requirements do not apply to the purchases of supplies or materials or articles ordinarily available on the open market, or contracts for transportation or transmission of intelligence.

7. Contracts for more than the simplified acquisition threshold currently set at $150,000, which is the inflation adjusted amount determined by the Civilian Agency Acquisition Council and the Defense Acquisition Regulations Council (Councils) as authorized by 41 U.S.C. 1908, must address administrative, contractual, or legal remedies in instances where contractors violate or breach contract terms, and provide for such sanctions and penalties as appropriate.

8. All contracts in excess of $10,000 must address termination for cause and for convenience by the non-Federal entity including the manner by which it will be affected and the basis for settlement.

9. Lobbying

If Respondent, in connection with any resulting contract from this Solicitation, is a recipient of a Federal contract, grant, or cooperative agreement exceeding $100,000 or a Federal loan or loan guarantee exceeding $150,000, the Contractor shall comply with the requirements of the new restrictions on lobbying contained in Section 1352, Title 31 of the U.S. Code, which are implemented in 15 CFR Part 28. Respondent shall require that the certification language of Section 1352, Title 31 of the U.S. Code be included in the award documents for all subcontracts and require that all subcontractors submit certification and disclosure forms accordingly. Each tier certifies to the tier above that it will not and has not used Federal appropriated funds to pay any person or organization for influencing or attempting to influence an officer or employee of any agency, a member of Congress, officer or employee of Congress, or an employee of a member of Congress in connection with obtaining any Federal contract, grant or any other award. Each tier must also disclose any lobbying with non-Federal funds that takes place in connection with obtaining any Federal award. Such disclosures are forwarded from tier to tier up to the non-Federal award.

10. Rights to Inventions Made Under a Contract or Agreement

If the Federal award meets the definition of "funding agreement" under 37 CFR § 401.2 (a) and the recipient or subrecipient wishes to enter into a contract with a small business firm or nonprofit organization regarding the substitution of parties, assignment or performance of experimental, developmental, or research work under

that “funding agreement,” the recipient or subrecipient must comply with the requirements of 37 CFR Part 401, “Rights to Inventions Made by Nonprofit Organizations and Small Business Firms Under Government Grants, Contracts and Cooperative Agreements,” and any implementing regulations issued by the awarding agency.

11. Minority and Women’s Businesses

Respondent and any potential subcontractors shall take affirmative steps to assure that minority and women's businesses are utilized when possible as sources of supplies, equipment, construction, and services, as detailed in the federal requirements relating to minority and women’s business enterprises: Executive Order 11625 of October 13, 1971, 36 Fed. Reg. 19967, as amended by Executive Order No. 12007 of August 22, 1977, 42 Fed. Reg. 42839; Executive Order No. 12432 of July 14, 1983, 48 Fed. Reg., 32551; and Executive Order No. 12138 of May 18, 1979, 44 Fed. Reg. 29637.

12. Environmental Standards

Respondent and any potential subcontractors shall comply with environmental standards that may be prescribed pursuant to the following:

a. Institution of environmental quality control measures under the National Environmental Policy Act of 1969 (P.L. 91-190) and Executive Order (EO) 11514;
b. Notification of violating facilities pursuant to EO 11738;
c. Protection of wetlands pursuant to EO 11990;
d. Evaluation of flood hazards in floodplains in accordance with EO 11988;
e. Assurance of project consistency with the approved State management program developed under the Coastal Zone Management Act of 1972 (16 U.S.C. §§1451 et seq.);
f. Conformity of Federal actions to State (Clean Air) Implementation Plans under Section 176(c) of the Clean Air Act of 1955, as amended (42 U.S.C.§§7401 et seq.);
g. Contracts and subgrants of amounts in excess of $150,000 must contain a provision that requires the non- Federal award to agree to comply with all applicable standards, orders or regulations issued pursuant to the Federal Water Pollution Control Act as amended (33 U.S.C. 1251-1387). Violations must be reported to the Federal awarding agency and the Regional Office of the Environmental Protection Agency (EPA).
h. Protection of underground sources of drinking water under the Safe Drinking Water Act of 1974, as amended (P.L. 93-523); and
i. Protection of endangered species under the Endangered Species Act of 1973, as amended (P.L. 93-205).
j. Mandatory standards and policies relating to energy efficiency which are contained in the state energy conservation plan issued in compliance with the Energy Policy and Conservation Act (42 U.S.C. 6201).
k. A non-Federal entity that is a state agency or agency of a political subdivision of a state and its contractors must comply with section 6002 of the Solid Waste Disposal Act, as amended by the Resource Conservation and Recovery Act. The requirements of Section 6002 include procuring only items designated in guidelines of the Environmental Protection Agency (EPA) at 40 CFR part 247 that contain the highest percentage of recovered materials practicable, consistent with maintaining a satisfactory level of competition, where the purchase price of the item exceeds $10,000 or the value of the quantity acquired during the preceding fiscal year exceeded
    - $10,000; procuring solid waste management services in a manner that maximizes energy and resource recovery; and establishing an affirmative procurement program for procurement of recovered materials identified in the EPA guidelines.

13. Historic Properties

Respondent and any potential subcontractors shall assist the awarding agency in assuring compliance with Section 106 of the National Historic Preservation Act of 1966, as amended (16 U.S.C. §470), EO 11593 (identification and protection of historic properties), and the Archaeological and Historic Preservation Act of 1974 (16 U.S.C. §§469a-1 et seq.).

14. All Other Federal Laws

Respondent and any potential subcontractors shall comply with all applicable requirements of all other Federal laws, executive orders, regulations, and policies governing the Solicitation.

I have read, understand, and agree to comply with the Federal Affirmations specified above. Checking "YES" indicates acceptance, while checking "NO" denotes non-acceptance.

YES_____ NO_____

Authorized Signature: _____

Printed Name & Title: _____

Respondent's Tax ID: _____Telephone: _____

If Respondent is a Corporation or other legal entity, please attach a corporate resolution or other appropriate official documentation that states that the person signing this Solicitation Response is an authorized person to sign for and legally bind the corporation or entity.

IFB 2024-B10 Road Building Materials - General Road Construction Attachment A - Bid Form						
Contract Item Number	Item Number	Description	Estimated Quantity (+/-)	Unit of Measure	Bid Price Per Unit (PICKUP)	Bid Price Per Unit (DELIVERED)
ITEMS FOR PICKUP						
B02.1	TXDOT Item 247 Flexible Base	Type A Grade 2	50,000	tons	$ -	$ -
B02.2	TXDOT Item 302 Aggregate for Surface Treatment	Type A Grade 3	10,000	tons	$ -	$ -
B02.3	TXDOT Item 302 Aggregate for Surface Treatment	Type A Grade 4	15,000	tons	$ -	$ -
B02.4	TXDOT Item 302 Aggregate for Surface Treatment	Type A Grade 5	3,000	tons	$ -	$ -
B02.5	TXDOT Item 302 Aggregate for Surface Treatment	Type PA Grade 4	1,000	tons	$ -	$ -
B02.6	TXDOT Item 302 Aggregate for Surface Treatment	Type PA Grade 5	1,000	tons	$ -	$ -
B02.7	TxDOT Item 506 Aggregate for Rock Filter Dams	3x5 Rock (Bull Rock)	3,000	tons	$ -	$ -
B02.8	City of Austin Item 510 Fine Aggregate - Sand	Manufactured Sand	1,000	tons	$ -	$ -
B02.9	City of Austin Item 510 Coarse Aggregate - Pipe Bedding Stone	No. 57 Washed Rock	2,000	tons	$ -	$ -
ITEMS FOR DELIVERY						
B02.1	TXDOT Item 247 Flexible Base	Type A Grade 2	50,000	tons	$ -	$ -
B02.10	Material Transportation Service (per mile)			miles	$ -	$ -

AGENDA ITEM REQUEST FORM: G. 26.

Hays County Commissioners Court

Date: 03/26/2024

Requested By: Jerry Borcherding

Sponsor: Judge Becerra

Agenda Item:

Approve extension of IFB 2019-B02 Road Building Materials - General Road Construction with Brauntex Materials, Inc. and Colorado Materials, Ltd. for a period not to exceed sixty-one (61) days (May 31, 2024). **BECERRA/BORCHERDING**

Summary:

The four (4) year contract for IFB 2019-B02 Road Building Materials - General Road Construction is scheduled to expire on March 31, 2024. The Transportation Department has requested that this contract be extended for a period of two months, not to exceed 61 days, while a new contract is secured.

Fiscal Impact:

Amount Requested: Per bid tab
Line Item Number:020-710-00.5351

Budget Office:

Source of Funds: Road & Bridge General Fund
Budget Amendment Required Y/N?: No
Comments: N/A

Purchasing Office:

Purchasing Guidelines Followed Y/N?: Yes
Comments: Invitation for Bid (IFB) 2019-B02 Road Building Materials - General Road Construction

Auditor's Office

G/L Account Validated Y/N?: Yes, Road Material and Supplies Expense
New Revenue Y/N?: N/A
Comments:

Attachments

(PE) Extension - Brauntex Materials
(PE) Extension - Colorado Materials

HAYS COUNTY PURCHASING OFFICE
Stephanie Hunt, Purchasing Agent
712 S. Stagecoach Trail, Ste. 1012 • San Marcos, Texas 78666
512-393-2267 • purchasing@co.hays.tx.us

March 21, 2024

Brauntex Materials, Inc.
1504 Wald Rd.
New Braunfels, TX 78132

RE: Contract Extension

The four (4) year contract for IFB 2019-B02 Road Building Materials – General Road Construction expires on March 31, 2024, and has no renewal options. Hays County would like to temporarily extend the current contract for a period not to exceed 61 days while a new contract is secured. This contract extension will not provide for any price increase or alterations to the current terms and conditions. This extension will expire upon the execution of a new contract pursuant to solicitation number IFB 2024-B10 or on May 31, 2024, whichever comes first.

If you are in agreement with the terms of this contract extension, please acknowledge below and email a signed copy to purchasing@co.hays.tx.us. Upon approval by the Hays County Commissioners Court, a fully executed copy will be returned to you for your files.

Sincerely,

Stephanie Hunt

Stephanie Hunt
Hays County Purchasing Agent

Signature	Brauntex Materials, Inc.
	Company
William O. Fischer	3/22/24
Printed Name	Date

Approved by the Hays County Commissioners Court on: _____

Ruben Becerra
Hays County Judge

HAYS COUNTY PURCHASING OFFICE
Stephanie Hunt, Purchasing Agent
712 S. Stagecoach Trail, Ste. 1012 • San Marcos, Texas 78666
512-393-2267 • purchasing@co.hays.tx.us

March 21, 2024

Colorado Materials, Ltd.
PO Box 2019
San Marcos, TX 78667

RE: Contract Extension

The four (4) year contract for IFB 2019-B02 Road Building Materials – General Road Construction expires on March 31, 2024, and has no renewal options. Hays County would like to temporarily extend the current contract for a period not to exceed 61 days while a new contract is secured. This contract extension will not provide for any price increase or alterations to the current terms and conditions. This extension will expire upon the execution of a new contract pursuant to solicitation number IFB 2024-B10 or on May 31, 2024, whichever comes first.

If you are in agreement with the terms of this contract extension, please acknowledge below and email a signed copy to purchasing@co.hays.tx.us. Upon approval by the Hays County Commissioners Court, a fully executed copy will be returned to you for your files.

Sincerely,
Stephanie Hunt
Stephanie Hunt
Hays County Purchasing Agent

Signature

Colorado Materials, LP.
Company

Brandon Casebolt
Printed Name

3/21/24
Date

Approved by the Hays County
Commissioners Court on: _____

Ruben Becerra
Hays County Judge

AGENDA ITEM REQUEST FORM: G. 27.

Hays County Commissioners Court

Date: 03/26/2024

Requested By: Stephanie Hunt
Sponsor: Judge Becerra
Co-Sponsor: Commissioner Ingalsbe

Agenda Item:

Approve Amendment 1 for RFP 2022-P12 Pet Resource Center - Project Coordinator with Austin Pets Alive! for a period not to exceed three months, June 30, 2024 and amend the budget accordingly. **BECERRA/INGALSBE/HUNT**

Summary:

The contract for RFP 2022-P12 Pet Resource Center - Project Coordinator between Hays County and Austin Pets Alive! is expiring on April 2, 2024, and the committee is requesting to extend the contract through June 30, 2024.

Fiscal Impact:

Amount Requested: $75,000
Line Item Number: 001-645-00.5448/121-752-00.5448

Budget Office:

Source of Funds: General Fund/Tobacco Settlement Fund
Budget Amendment Required Y/N?: No
Comments: N/A

Purchasing Office:

Purchasing Guidelines Followed Y/N?: Yes
Comments: Request for Proposal (RFP) 2022-P12 Pet Resource Center - Project Coordinator

Auditor's Office

G/L Account Validated Y/N?: Yes
New Revenue Y/N?: N/A
Comments:

Attachments

Amendment 1 for Contract Extension

First Amendment to the Professional Services Agreement (RFP 2022-P12 Pet Resource Center – Project Coordinator)

1. This First Amendment to the Pet Resource Center – Project Coordinator Contract (the "First Amendment"), attached as *Exhibit "A"* and executed March 28, 2023, is made this 26th day of March 2024, by and between **Hays County, Texas ("Client")** and **Austin Pets Alive! ("Contractor")**. The above-cited parties are collectively referred to as "the parties to this Agreement" or "the parties."

2. Section 4. Term and Duration of Contract
   a. Addition of contract extension: This contract shall be extended for an additional three (3) months, effective April 3, 2024, through June 30, 2024.

3. Section 5. Compensation:
   a. Addition of Amendment 1 Compensation Terms: The County agrees to pay Contractor compensation in the amount of $25,000.00 monthly, for the deliverable and terms which are cited in ***Exhibit "D"***. Despite any reference to Contractor's pay schedule, or any changes int eh Scope of Services (i.e., Amendment), the parties agree that the County shall pay Contractor a total fee not to exceed seventy-five thousand dollars ($75,000 USD) for the work under this contract amendment.

4. Except for the above modifications set forth in this First Amendment, all other terms and conditions of the Agreement shall remain unaffected and shall continue in full force and effect in accordance with its terms.

HAYS COUNTY, TEXAS

By: _____

Printed Name: _____

Title: _____

Dated: _____

AUSTIN PETS ALIVE!

By: _____

Printed Name: Ellen Jefferson

Title: President & CEO

Dated: 3/21/24

ATTEST: _____
Elaine Cardenas
Hays County Clerk

Exhibit D
Amendment 1 Scope of Work and Compensation

Monthly Payment Allotments

Month	Total Payment Amounts
13th Month (April 2024)	$25,000
14th Month (May 2024)	$25,000
15th Month (June 2024)	$25,000
Total Payments	$75,000

Deliverables Timeline & Fees

APA! goal is to maintain momentum and public engagement with the Pet Resource Center project and provide continuity in messages and dedicated support to the Hays County PASS Virtual Resources Center programming.

Task/Deliverable	***Completion Timeline**
Consultation	
Continue consultative support to plan human services/Pet Resource Center campus, related programming, and ordinance updates	Monthly
Meetings	
Attend weekly HASS pilot director meetings to represent Hays County Pet Resource Center project.	Monthly
Conduct joint meetings with animal control programs to discuss integration of Hays County PASS/Virtual Resource Center as a resource.	April
Marketing	
Continue creation of marketing and communications content, maintenance of social media channels (Facebook and Instagram), and community engagement.	Monthly
• attendance at least 2 community events	June
• minimum of 5 social media posts per channel per week, and blog post	Monthly
• infographic month end summary detailing Hays County PASS/Virtual Resource Center impact	Monthly
Continue marketing, promoting and providing dedicated support for the Hays County PASS/virtual resource center with the goal of providing assistance to at least 250 residents in three months.	June
Propagate info required for pets.findhelp.com with at least 20 community resources to complement and expand Hays County PASS/Virtual Resource Center resources.	June

*If Austin Pets Alive anticipates any adjustments to the timeline, they must communicate the need for the adjustment and a new proposed timeline, and it must be agreeable to both parties.

*If Austin Pets Alive does not meet a milestone by the designated timeline and fails to communicate to Hays County, Austin Pets Alive must provide documentation for the delay and has 30 days to provide deliverables before payment is withheld.

AGENDA ITEM REQUEST FORM: G. 28.

Hays County Commissioners Court

Date: 03/26/2024

Requested By: Jerry Borcherding
Sponsor: Commissioner Cohen
Co-Sponsor: Commissioner Shell

Agenda Item

Approve Utility Permits. **COHEN/SHELL/BORCHERDING**

Summary

TRN-2024-7416-UTL	Goforth SUD proposed to bore across Regina Drive with a 3/4" water line to service 401 Regina Drive.
TRN-2024-7390-UTL	Frontier proposes to Overhead Aerial from pole to pole on the south side of Skyline Dr. Then lash across the street to the pole and place a new pole 10' north of the existing pole #2 and transfer cables. On Mountain Crest Rd, transfer cables to pole 2. This has been cleared with County GEC's.
TRN-2024-7607-UTL	MCI Metro proposes to install 830' of 864 CT fiber optic cable along Foster Pl.
TRN-2023-7677-UTL	Frontier to remove existing copper within the ROW of Hillside Terrace and placing new copper in 2" duct boring beneath Hillside Terrace at the intersection with Old Goforth Road/Tori Drive. Frontier is aware of future improvements to Hillside Terrace.

Attachments

Permit
Plan Set
Permit
Plan Set
Permit
Site Plan
Permit
Site Plan

Hays County Transportation Department

2171 Yarrington Rd, Suite 200, Kyle Texas 78640
(P) 512-393-7385 (Web) www.hayscountytx.com

UTILITY PERMIT APPROVAL LETTER

** Notification must be given **IN WRITING** at least 24 hours before work begins and proper traffic control must be implemented throughout the work zone. **

The utility company or any of its representatives, engineers, contractors, or authorized agents agree to use Best Management Practices to minimize erosion and sedimentation resulting from the proposed installation AND will insure that traffic control measures complying with applicable portions of the Texas Manual of Uniform Traffic Control Devices will be installed and maintained during installation.

General Special Provisions:

1. Construction of this line will begin on or after 12/15/2023 .

Utility Company Information:

Name: Frontier Communications
Address: 301 Industrial Blvd Bryan TX
Phone:
Contact Name: Bill Harper

Engineer / Contractor Information:

Name: Housley Communications
Address: 8084 Wickson Ridge Dr Brayn TX 77808
Phone:
Contact Name: Harvey Kelley

Hays County Information:

Utility Permit Number: TRN-2024-7390-UTL
Type of Utility Service: Aerial Fiber
Project Description:
Road Name(s): Skyline Dr, Mountain Crest Dr, , , , FM-12 / Ranch Road-12, ,
Subdivision:
Commissioner Precinct:

What type of cut(s) will you be using ? ☐ Boring ☐ Trenching ☒ Overhead ☐ N/A

Authorization by Hays County Transportation Department
The above-mentioned permit was approved in Hays County Commissioners Court on .

Signature	Title	Date
Roland Chankin	Engineering Technician	03/20/2024

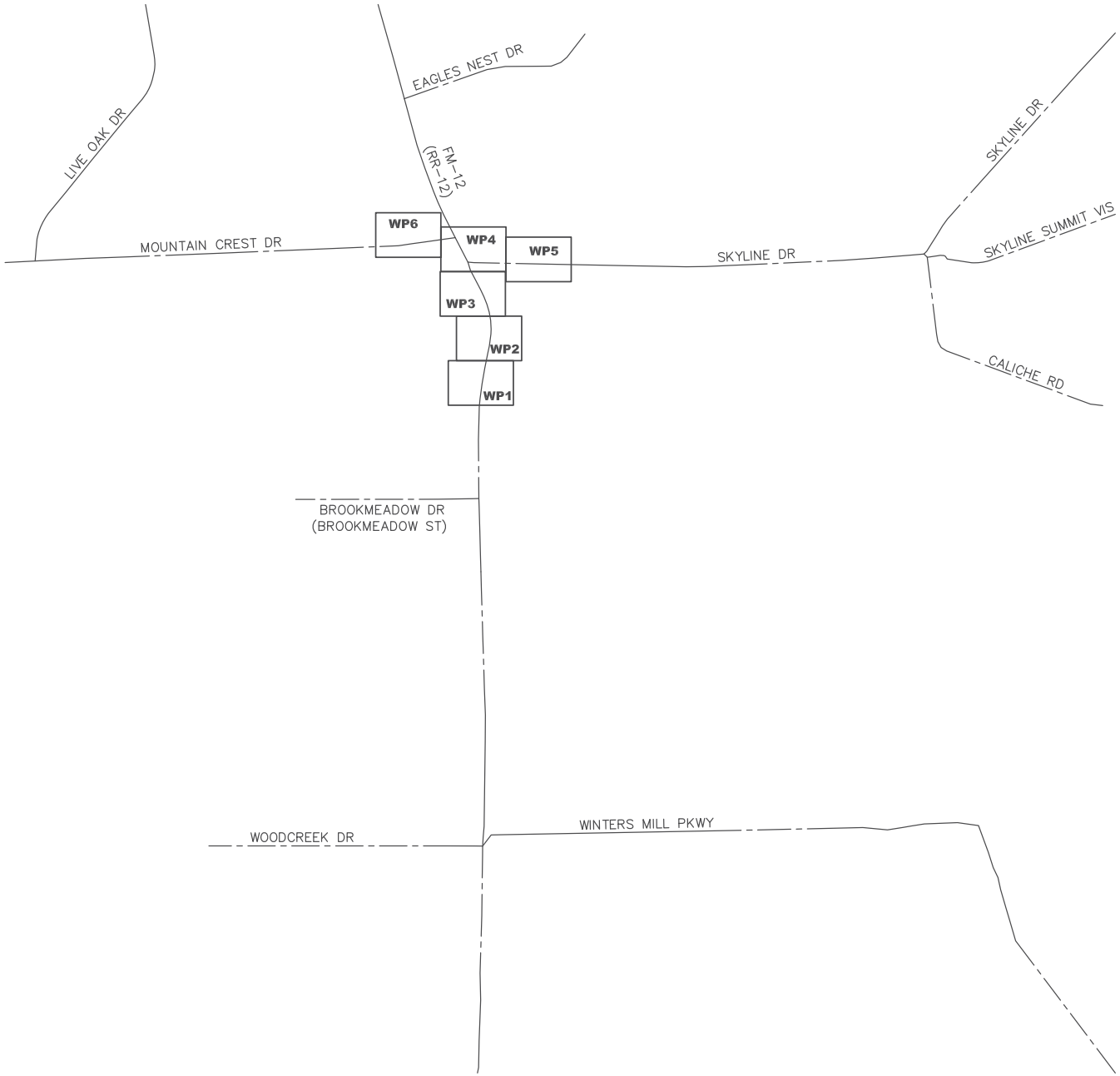

frontier Communications

WMBR RDMV HAYS COUNTY
RM 12 SKYLINE TO MT CREST

PROJECT NUMBER: 5335559	C.O. AREA: WMBR EXCH. CODE: 70519	
DRAWN DATE: 10/11/2023	ENGR: GARY MASTERSON PHONE: 260403-0588	CADD/MAPS FILE:
SCALE: 1=100	TAX DISTRICT:	DWG KEYOF
TWNSHP:	RNG:	SEC:

NEW MATERIAL
2411.001 110354: 5
2421.101 280425A: 300'
2421.101 280480A: 557'

MATERIAL REMOVAL
3411.004 110351(2021): 2
3411.004 110304(2014): 2
3421.104 282480(1995): 525'
3421.104 282450(2001): 525'
3421.104 282450(1994): 485'
3421.104 282483(1997): 485'(266' + 219')

WIMBERLY TEXAS WORKING COPPER
CSAAF 3801,1126-1150
1131: 110 LIVE OAK DR - CSAAF 3901,174 - CSAAF C8C001,174
1143: 206 LIVE OAK DR - CSAAF 3901,171 - CSAAF C8C001,171
1146: 188 MOUNTAIN CREST DR - CSAAF 3901,330 - CSAAF C8C001,330

CSAAF 3801,1201-1300
1204: 16611 RAND RD 12 - CSAAF 3901,979 - CSAAF C8C001,979
1252: 101 CRESTVIEW DR - CSAAF 3901,764 - CSAAF C8C001,764

CSAAF 3801,1151-1200
1152: 900 SKYLINE RIDGE LKO - CSAAF 3901,672 - CSAAF C8C001,672
1180: 600 SKYLINE RIDGE LKO - CSAAF 3901,590 - CSAAF C8C001,590
1181: 650 SKYLINE RIDGE LKO - CSAAF 3901,259 - CSAAF C8C001,259
1186: 625 SKYLINE RIDGE LKO - CSAAF 3901,633 - CSAAF C8C001,633
1192: 801 SKYLINE RIDGE LKO - CSAFF 3901,625 - CSAAF C8C001,625
1197: 700 SKYLINE RIDGE LKO - CSAAF 3901,117 - CSAAF C8C001,117

CSAAF 3801,1301-1500
1307: 310 SKYLINE RIDGE LKO - CSAAF 3901,617 - CSAAF C8C001,617
1310: 308 SKYLINE RIDGE LKO - CSAAF 3901,604 - CSAAF C8C001,604
1318: 271 SKYLINE RIDGE LKO - CSAAF 3901,134 - CSAAF C8C001,134
1322: 364 SKYLINE RIDGE LKO - CSAAF 3901,639 - CSAAF C8C001,639
1325: 309 SKYLINE RIDGE LKO - CKT 01 / IBDC / 512 / 847 / 0676 / B
1328: 100 SUNRISE CANYON RD - CSAAF 3901,605 - CSAAF C8C001,605
1335: 120 SUNRISE CANYON RD - CSAAF 3901,620 - CSAAF C8C001,620
1336: 230 SUNRISE CANYON RD - CSAAF 3901,621 - CSAAF C8C001,621
1363: 505 STONEY CREEK VIS - CSAAF 3901,870 - CSAAF C8C001,870
1365: 106 VALLEY VISTA - CSAAF 3901,1062 - CSAAF C8C001,1062
1367: 501 STONEY CREEK VIS - CSAAF 3901,1126 - CSAAF C8C001,1126
1373: 116 SKY RANCH CIR - CSAAF 3901,361 - CSAAF C8C001,361
1386: 1101 SKYLINE RIDGE LKO - CSAAF 3901,611 - CSAAF C8C001,611
1388: 1458 SKYLINE RIDGE LKO - CSAAF 3901,613 - CSAAF C8C001,613
1393: 760 SKYLINE RIDGE LKO - CSAAF 3901,143 - CSAAF C8C001,143
1396: 1451 SKYLINE RIDGE LKO - CSAAF 3901,629 - CSAAF C8C001,629
1398: 730 SKYLINE RIDGE LKO LOT 46 - CSAAF 3901,1013 - CSAAF C8C001,1013
1401: 1010 SKYLINE DR - CSAAF 3901,120 - CSAAF C8C001,120
1404: 1330 SKYLINE DR - CSAAF 3901,549 - CSAAF C8C001,549
1411: 150 E SKYLINE ACRES - CSAAF 3901,556 - CSAAF C8C001,556
1418: 1015 SKYLINE VISTA - CSAAF 3901,113 - CSDCO UMB710-1 2
1419: 525 SKYLINE SUMMIT VIS - CSAAF 3901,581 - CSAAF C8C001,581
1426: 525 SKYLINE RIDGE LKO - CSAAF 3901,922 - CSAAF C8C001,922
1431: 1300 SKYLINE DR - CSAAF 3901,554 - CSAAF C8C001,554
1439: 1000 SKYLINE DR - CSAAF 3901,559 - CSAAF C8C001,559
1441: 521 SKYLINE SUMMIT VIS - CSAAF 3901,601 - CSAAF C8C001,601
1444: 850 SKYLINE DR - CSAAF 3901,866 - CSAAF C8C001,866
1452: 15530 WINTERS MILL PKWY - CSAAF 3901,136 - CSAAF C8C001,136
1453: 250 CALICHE RD - CSAAF 3901,636 - CSAAF C8C001,636
1462: 303 CALICHE RD - CSAAF 3901,647 - CSAAF C8C001,647
1465: 75330 WINTERS MILL PKWY - CSAAF 3901,164 - CSAAF C8C001,164
1466: 300 CALICHE RD - CSAAF 3901,651 - CSAAF C8C001,651
1467: 150 CALICHE RD - CSAAF 3901,749 - CSAAF C8C001,749
1468: 400 CALICHE RD - CSAAF 3901,1096 - CSAAF C8C001,1096
1472: 500 CALICHE RD - CSAAF 3901,683 - CSAAF C8C001,683
1476: 700 SKYLINE DR - CSAAF 3901,312 - CSAAF C8C001,312
1478: 121 VALLEY VERDE CT - CSAAF 3901,142 - CSAAF C8C001,142
1483: 520 SKYLINE SUMMIT VIS - CSAAF 3901,772 - CSAAF C8C001,135
1491: VACANT
1492: 600 SKYLINE SUMMIT VIS - CSAAF 3901,977 - CSAAF C8C001,977

NEW 100 PAIR CABLE SKYLINE DRIVE:

AKF 100-24
CSAAF 3801,1151-1152+
CSAAF 3801,1180-1181+
CSAAF 3801,1186-1189+
CSAAF 3801,1192-1193+
CSAAF 3801,1197-1198+
CSAAF 3801,1307-1310+
CSAAF 3801,1318-1319+
CSAAF 3801,1322-1325+
CSAAF 3801,1328-1329+
CSAAF 3801,1335-1336+
CSAAF 3801,1363-1367+
CSAAF 3801,1373-1374+
CSAAF 3801,1386-1388+
CSAAF 3801,1393-1394+
CSAAF 3801,1396-1398+
CSAAF 3801,1401-1404+
CSAAF 3801,1411-1412+
CSAAF 3801,1418-1419+
CSAAF 3801,1426-1427+
CSAAF 3801,1431-1432+
CSAAF 3801,1439-1441+
CSAAF 3801,1444-1445+
CSAAF 3801,1452-1453+
CSAAF 3801,1462-1468+
CSAAF 3801,1472-1473+
CSAAF 3801,1476-1478+
CSAAF 3801,1483-1484+
CSAAF 3801,1491-1492+
XDD,75-100

frontier Communications

WMBR RDMV HAYS COUNTY
RM 12 SKYLINE TO MT CREEK

PROJECT NUMBER: 5335559		C.O. AREA: WMBR EXCH. CODE: 70519	
DRAWN DATE: 10/11/2023	ENGR: GARY MASTERSON PHONE: 260-403-0588	CNTY: HAYS FILE:	
SCALE: 1=100	TAX DISTRICT:	DWG ADD INFO	QE
TWNSHP:	RNG:	SEC:	

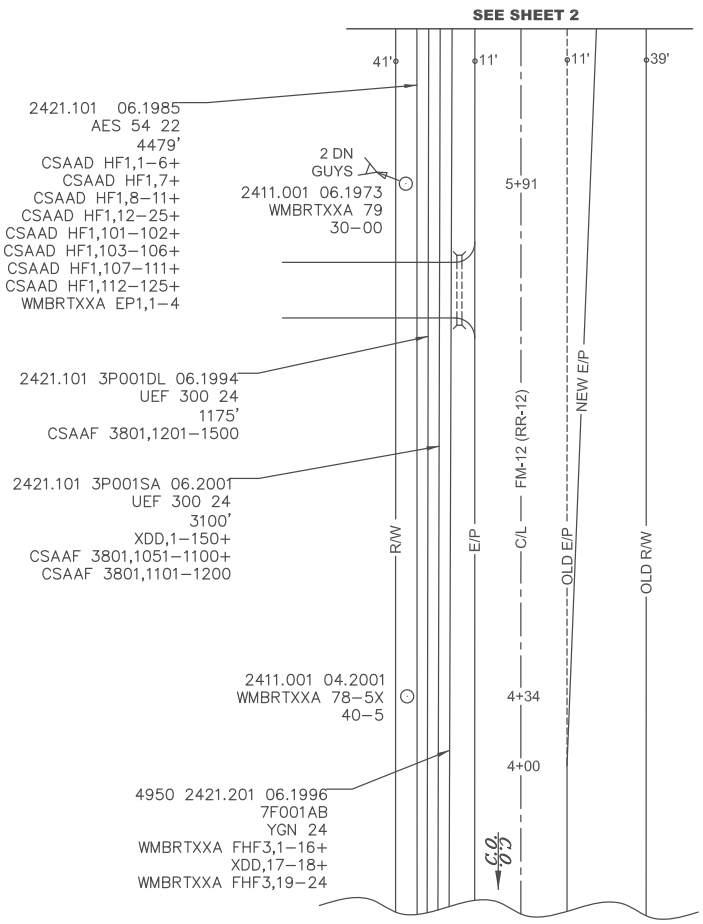

** CAUTION **
Multiple Voltage Power
Circuits Overhead

'STOP and LOOK UP'

frontier Communications

WMBR RDMV HAYS COUNTY
RM 12 SKYLINE TO MT CREST

PROJECT NUMBER: 5335559		C.O. AREA: WMBR EXCH. CODE: 70519
DRAWN DATE: 10/11/2023	ENGR: GARY MASTERSON PHONE: 260-403-0588	SUPV/ACC FILE:
SCALE: 1=100	TAX DISTRICT:	DWG 1 OF 6
TWNSHP:	RNG:	SEC:

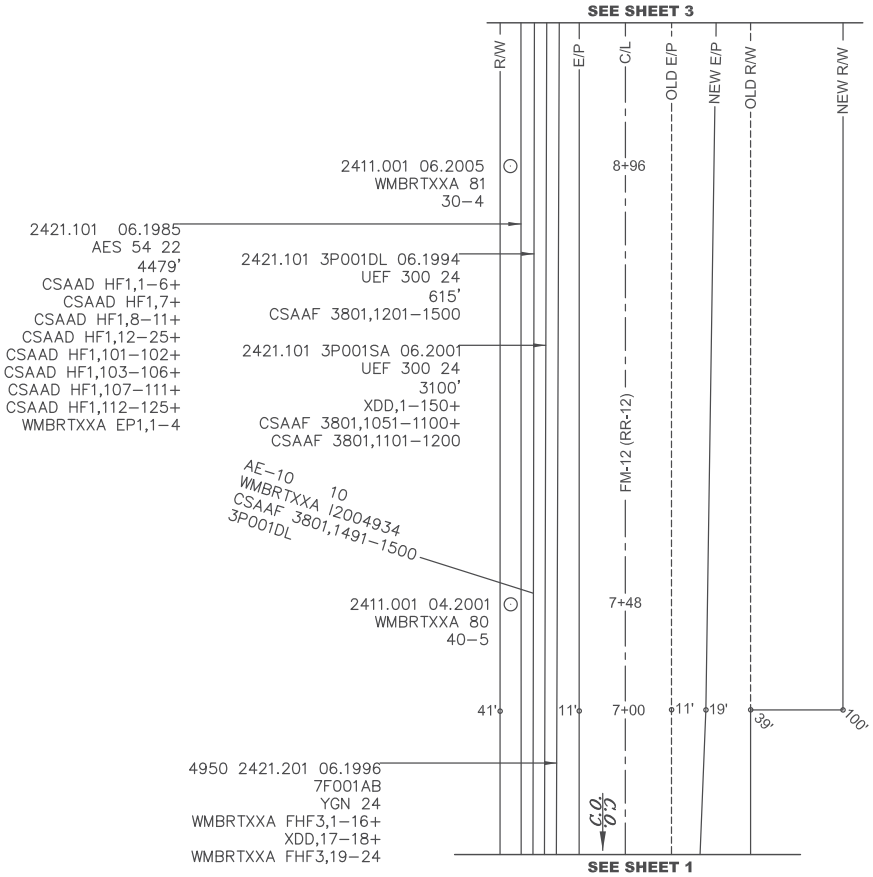

** CAUTION **
Multiple Voltage Power
Circuits Overhead

'STOP and LOOK UP'

frontier Communications

WMBR RDMV HAYS COUNTY
RM 12 SKYLINE TO MT CREST

PROJECT NUMBER: 5335559		C.O. AREA: WMBR EXCH. CODE: 70519
DRAWN DATE: 10/11/2023	ENGR: GARY MASTERSON PHONE: 260-403-0588	SHEET NAME: FILE:
SCALE: 1=100	TAX DISTRICT:	DWG 2 OF 6
TWNSHP:	RNG:	SEC:

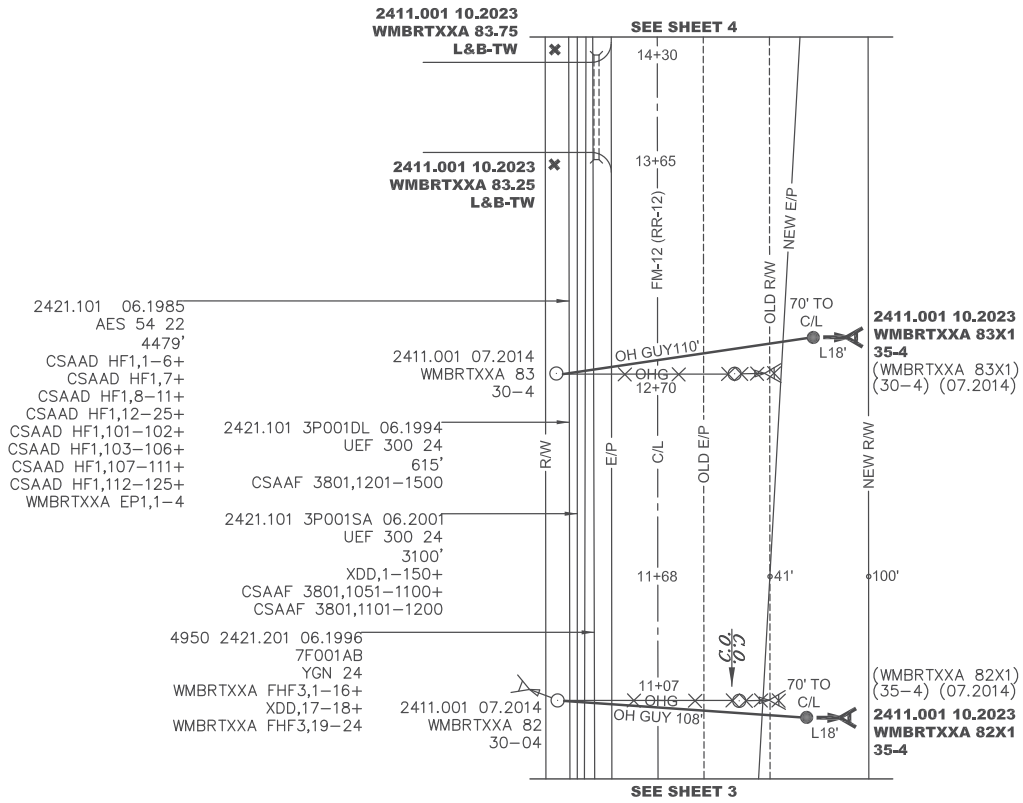

** CAUTION **
Multiple Voltage Power
Circuits Overhead

'STOP and LOOK UP'

frontier Communications

WMBR RDMV HAYS COUNTY
RM 12 SKYLINE TO MT CREST

PROJECT NUMBER: 5335559		C.O. AREA: WMBR EXCH. CODE: 70519
DRAWN DATE: 10/11/2023	ENGR: GARY MASTERSON PHONE: 260-403-0588	RSDW/ATCO FILE:
SCALE: 1=100	TAX DISTRICT:	DWG 3 OF 6
TWNSHP:	RNG:	SEC:

2421.101 06.1985
AES 54 22
4479'
CSAAD HF1,1–6+
CSAAD HF1,7+
CSAAD HF1,8–11+
CSAAD HF1,12–25+
CSAAD HF1,101–102+
CSAAD HF1,103–106+
CSAAD HF1,107–111+
CSAAD HF1,112–125+
WMBRTXXA EP1,1–4

2421.101 06.1984
CBL EXCH BKMA 100 24
523'
CSAAD 3020,301–340+
XDD,341+
CSAAD 3020,342–350+
XDD,51–60+
CSAAD 3020,361–367+
XDD,368+
CSAAD 3020,369–375+
XDD,76–100

2421.101 06.1973
AE 50 24
613'
CSAAF 3801,1051–1100

Ⓐ **2421.101 5335559 10.2023**
AKF 100 24
554'
CSAAF 3801,1151-1152+
CSAAF 3801,1180-1181+
CSAAF 3801,1186-1187+
CSAAF 3801,1192-1193+
CSAAF 3801,1197-1198+
CSAAF 3801,1307-1310+
CSAAF 3801,1318-1319+
CSAAF 3801,1322-1325+
CSAAF 3801,1328-1329+
CSAAF 3801,1335-1336+
CSAAF 3801,1363-1367+
CSAAF 3801,1373-1374+
CSAAF 3801,1386-1388+
CSAAF 3801,1393-1394+
CSAAF 3801,1396-1398+
CSAAF 3801,1401-1404+
CSAAF 3801,1411-1412+
CSAAF 3801,1418-1419+
CSAAF 3801,1426-1427+
CSAAF 3801,1431-1432+
CSAAF 3801,1439-1441+
CSAAF 3801,1444-1445+
CSAAF 3801,1452-1453+
CSAAF 3801,1462-1468+
CSAAF 3801,1472-1473+
CSAAF 3801,1476-1478+
CSAAF 3801,1483-1484+
CSAAF 3801,1491-1492+
XDD,75-100

Ⓓ (2421.101 3P001GY 06.1997)
(UEF 300 24)
(100')
(XDD,1-50+)
(CSAAF 3801,1151-1200+)
(CSAAF 3801,1301-1404+)
(XDD,1405+)
(CSAAF 3801,1406-1417+)
(XDD,1418+)
(CSAAF 3801,1419-1500)

Ⓕ (2421.101 3P001DL 06.1994)
(UEF 50 24)
(485')
(CSAAF 3801,1401-1450)

Ⓖ **2421.101 5335559 10.2023**
AKF 25 24
300'
CSAAF 3801,1131-1132+
CSAAF 3801,1143-1150+
CSAAF 3801,1201-1205+
CSAAF 3801,1251-1255+
XDD,21-25

Ⓙ (2421.101 9P505GR 06.1995)
(UEF 100 24)
(480')
(CSAAF 3801,1201-1300)

Ⓚ (2421.101 3P001VF 06.2001)
(UEF 50 24)
(525')
(XDD,1-25+)
(CSAAF 3801,1126-1150)

SEE SHEET 6

R/W
E/P
C/L — MOUNTAIN CREST DR
OLD E/P
NEW E/P
NEW R/W
OLD R/W
E/P
FM-12 (RR-12)
NEW E/P
NEW R/W
CONCRETE DR
OLD E/P
OLD R/W
NEW R/W
NEW E/P
OLD R/W
OLD E/P
SKYLINE DR — C/L
E/P
R/W

46' 40' 12' 12' 40' 63'

17+03
105+25
104+35
104+55
15+44
200+00
15+15
201+50
201+57
14+50

(WMBRTXXA 84–4X)
(L&B–TW) (06.1995)

(WMBRTXXA 1)
(L&B–TW) (06.1995)
(UNK_DGGUY)

CONTACT NEW POWER POLES

L18'

2411.001 10.2023
WMBRTXXA 1
L&B-TW

2411.001 10.2023
WMBRTXXA 84-4X
L&B-TW

2421.101 3P001YG 06.2002
UEF 50 24
25'
CSAAF 3801,1051–1100

28'

1
2421.101

2411.001 11.2021
WMBRTXXA 84
35–04
(POWER POLE TO)
(BE REMOVED)
(REMOVE CONTACTS)
(AND SIDE ARM)

(POWER POLE TO)
(BE REMOVED)

100'

2411.001 10.2023
WMBRTXXA 1
35-4

SEE SHEET 5

2421.101 3P001DL 06.1994
UEF 300 24
615'
CSAAF 3801,1201–1500

2421.101 3P001SA 06.2001
UEF 300 24
3100'
XDD,1–150+
CSAAF 3801,1051–1100+
CSAAF 3801,1101–1200

4950 2421.201 06.1996
7F001AB
YGN 24
WMBRTXXA FHF3,1–16+
XDD,17–18+
WMBRTXXA FHF3,19–24

** CAUTION **
Multiple Voltage Power
Circuits Overhead
'STOP and LOOK UP'

frontier Communications

WMBR RDMV HAYS COUNTY
RM 12 SKYLINE TO MT CREST

PROJECT NUMBER: 5335559	C.O. AREA: WMBR EXCH. CODE: 70519	
DRAWN DATE: 10/11/2023	ENGR: GARY MASTERSON PHONE: 260403-0588	DWG NAME: FILE:
SCALE: 1=100	TAX DISTRICT:	DWG 4 OF 6
TWNSHP:	RNG:	SEC:

Ⓓ (2421.101 3P001GY 06.1997)
(UEF 300 24)
(100')
(XDD,1-50+)
(CSAAF 3801,1151-1200+)
(CSAAF 3801,1301-1404+)
(XDD,1405+)
(CSAAF 3801,1406-1417+)
(XDD,1418+)
(CSAAF 3801,1419-1500)

Ⓔ (2421.101 3P001GY 06.1997)
(UEF 300 24)
(119')
(XDD,1-50+)
(CSAAF 3801,1151-1200+)
(CSAAF 3801,1301-1404+)
(XDD,1405+)
(CSAAF 3801,1406-1417+)
(XDD,1418+)
(CSAAF 3801,1419-1500)

Ⓕ (2421.101 3P001DL 06.1994)
(UEF 50 24)
(485')
(CSAAF 3801,1401-1450)

Ⓒ 2421.101 3P001DL 06.1994
UEF 50 24
1841'
*5335559:5
CSAAF 3801,1401-1404+ NC+
(CSAAF 3801,1405-1410+) XDD,5-10+
CSAAF 3801,1411-1412+ NC+
(CSAAF 3801,1413-1417+) XDD,13-17+
CSAAF 3801,1418-1419+ NC+
(CSAAF 3801,1420-1425+) XDD,20-25+
CSAAF 3801,1426-1427+ NC+
(CSAAF 3801,1428-1430+) XDD,28-30+
CSAAF 3801,1431-1432+ NC+
(CSAAF 3801,1433-1438+) XDD,33-38+
CSAAF 3801,1439-1441+ NC+
(CSAAF 3801,1442-1443+) XDD,42-43+
CSAAF 3801,1444-1445+ NC+
(CSAAF 3801,1446-1450) XDD,46-50

Ⓑ 2421.101 3P001GY 06.1997
UEF 300 24
496'
*5335559:4
XDD,1-50+ NC+
CSAAF 3801,1151-1152+ NC+
(CSAAF 3801,1153-1179+) XDD,53-79+
CSAAF 3801,1180-1181+ NC+
(CSAAF 3801,1182-1185+) XDD,82-85+
CSAAF 3801,1186-1187+ NC+
(CSAAF 3801,1188-1191+) XDD,88-91+
CSAAF 3801,1192-1193+ NC+
(CSAAF 3801,1194-1196+) XDD,94-96+
CSAAF 3801,1197-1198+ NC+
(CSAAF 3801,1199-1200+) XDD,99-100+
(CSAAF 3801,1301-1306+) XDD,101-106+
CSAAF 3801,1307-1310+ NC+
(CSAAF 3801,1311-1317+) XDD,111-117+
CSAAF 3801,1318-1319+ NC+
(CSAAF 3801,1320-1321+) XDD,120-121+
CSAAF 3801,1322-1325+ NC+
(CSAAF 3801,1326-1327+) XDD,126-127+
CSAAF 3801,1328-1329+ NC+
(CSAAF 3801,1330-1334+) XDD,130-134+
CSAAF 3801,1335-1336+ NC+
(CSAAF 3801,1337-1362+) XDD,137-162+
CSAAF 3801,1363-1367+ NC+
(CSAAF 3801,1368-1372+) XDD,168-172+
CSAAF 3801,1373-1374+ NC+
(CSAAF 3801,1375-1385+) XDD,175-185+
CSAAF 3801,1386-1388+ NC+
(CSAAF 3801,1389-1392+) XDD,189-192+
CSAAF 3801,1393-1394+ NC+
(CSAAF 3801,1395-1395+) XDD,195-195+
CSAAF 3801,1396-1398+ NC+
(CSAAF 3801,1399-1404+) XDD,199-204+
(XDD,1405-1405+) XDD,205-205+
(CSAAF 3801,1406-1417+) XDD,206-217+
(XDD,1418-1418+) XDD,218-218+
(CSAAF 3801,1419-1451+) XDD,219-251+
CSAAF 3801,1452-1453+ NC+
(CSAAF 3801,1454-1461+) XDD,254-261+
CSAAF 3801,1462-1468+ NC+
(CSAAF 3801,1469-1471+) XDD,269-271+
CSAAF 3801,1472-1473+ NC+
(CSAAF 3801,1474-1475+) XDD,274-275+
CSAAF 3801,1476-1478+ NC+
(CSAAF 3801,1479-1482+) XDD,279-282+
CSAAF 3801,1483-1484+ NC+
(CSAAF 3801,1485-1490+) XDD,285-290+
CSAAF 3801,1491-1492+ NC+
(CSAAF 3801,1493-1500) XDD,293-300

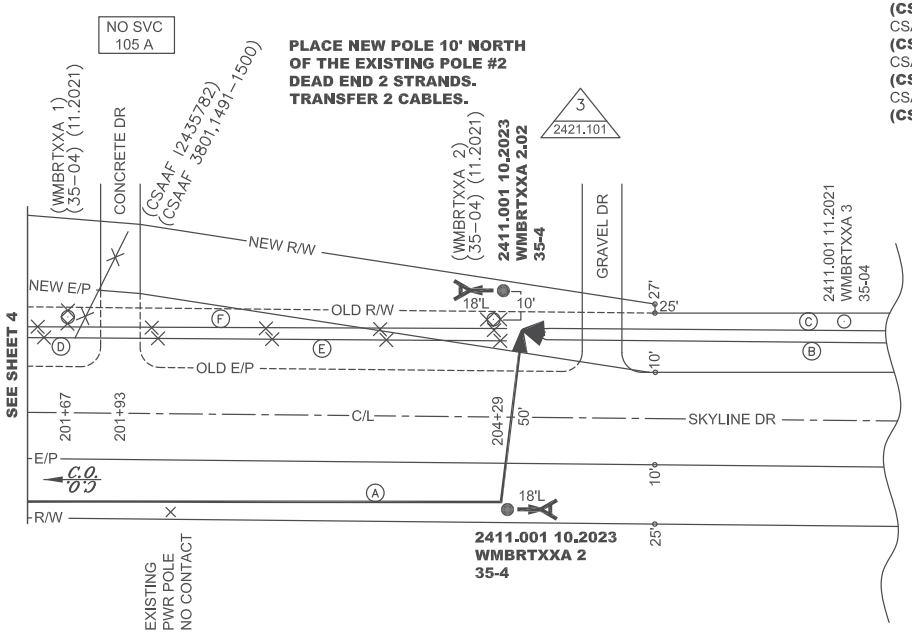

Ⓐ **2421.101 5335559 10.2023**
AKF 100 24
554'
CSAAF 3801,1151-1152+
CSAAF 3801,1180-1181+
CSAAF 3801,1186-1187+
CSAAF 3801,1192-1193+
CSAAF 3801,1197-1198+
CSAAF 3801,1307-1310+
CSAAF 3801,1318-1319+
CSAAF 3801,1322-1325+
CSAAF 3801,1328-1329+
CSAAF 3801,1335-1336+
CSAAF 3801,1363-1367+
CSAAF 3801,1373-1374+
CSAAF 3801,1386-1388+
CSAAF 3801,1393-1394+
CSAAF 3801,1396-1398+
CSAAF 3801,1401-1404+
CSAAF 3801,1411-1412+
CSAAF 3801,1418-1419+
CSAAF 3801,1426-1427+
CSAAF 3801,1431-1432+
CSAAF 3801,1439-1441+
CSAAF 3801,1444-1445+
CSAAF 3801,1452-1453+
CSAAF 3801,1462-1468+
CSAAF 3801,1472-1473+
CSAAF 3801,1476-1478+
CSAAF 3801,1483-1484+
CSAAF 3801,1491-1492+
XDD,75-100

** CAUTION **
Multiple Voltage Power Circuits Overhead
'STOP and LOOK UP'

frontier Communications

WMBR RDMV HAYS COUNTY
RM 12 SKYLINE TO MT CREST

PROJECT NUMBER: 5335559	C.O. AREA: WMBR EXCH. CODE: 70519	
DRAWN DATE: 10/11/2023	ENGR: GARY MASTERSON PHONE: 260403-0588	DWG NO: FILE:
SCALE: 1=100	TAX DISTRICT:	DWG 5 OF 6
TWNSHP:	RNG:	SEC:

Ⓙ (2421.101 9P505GR 06.1995)
(UEF 100 24)
(480')
(CSAAF 3801,1201-1300)

Ⓚ (2421.101 3P001VF 06.2001)
(UEF 50 24)
(525')
(XDD,1-25+)
(CSAAF 3801,1126-1150)

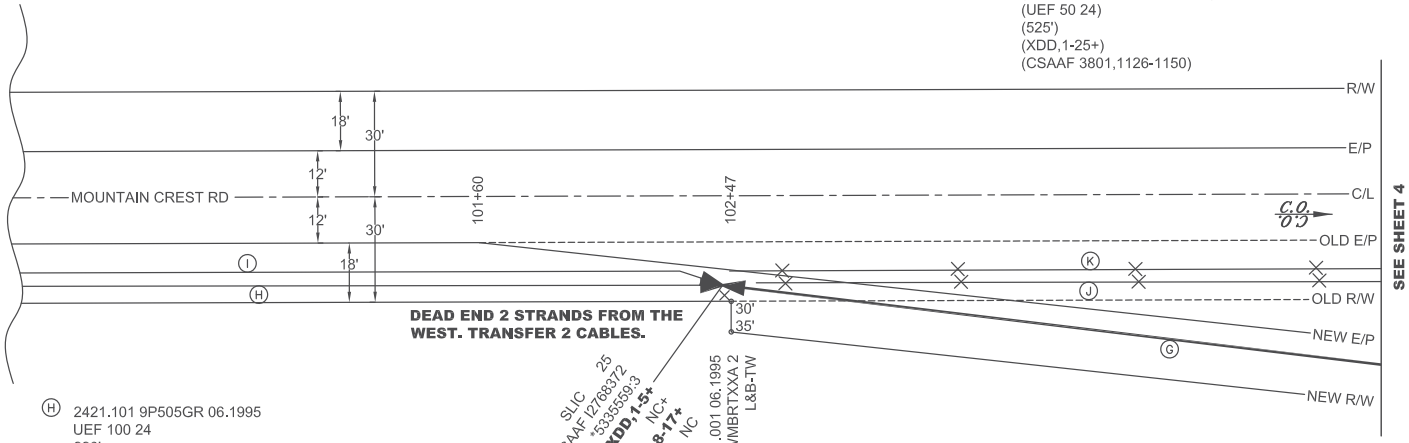

DEAD END 2 STRANDS FROM THE WEST. TRANSFER 2 CABLES.

SLIC 25
CSAAF I2768372
*5335559:3
(CSAAF 3801,1126-1130+) XDD,1-5+
CSAAF 3801,1131-1132+ NC+
(CSAAF 3801,1133-1142+) XDD,8-17+
CSAAF 3801,1143-1150 NC

2411.001 06.1995
WMBRTXXA 2
L&B-TW

2
2421.101

Ⓗ 2421.101 9P505GR 06.1995
UEF 100 24
220'
*5335559:2
CSAAF 3801,1201-1205+ NC+
(CSAAF 3801,1206-1250+) XDD,6-50+
CSAAF 3801,1251-1255+ NC+
(CSAAF 3801,1256-1300) XDD,56-100

Ⓘ 2421.101 3P001VF 06.2001
UEF 50 24
1741'
*5335559:1
XDD,1-25+ NC+
(CSAAF 3801,1126-1130+) XDD,26-30+
CSAAF 3801,1131-1132+ NC+
(CSAAF 3801,1133-1142+) XDD,33-42+
CSAAF 3801,1143-1150 NC

Ⓖ **2421.101 5335559 10.2023**
AKF 25 24
300'
CSAAF 3801,1131-1132+
CSAAF 3801,1143-1150+
CSAAF 3801,1201-1205+
CSAAF 3801,1251-1255+
XDD,21-25

** CAUTION **
Multiple Voltage Power Circuits Overhead
'STOP and LOOK UP'

frontier Communications

WMBR RDMV HAYS COUNTY
RM 12 SKYLINE TO MT CREST

PROJECT NUMBER: 5335559	C.O. AREA: WMBR EXCH. CODE: 70519	
DRAWN DATE: 10/11/2023	ENGR: GARY MASTERSON PHONE: 260403-0588	SHEET NAME: FILE:
SCALE: 1=100	TAX DISTRICT:	DWG 6 OF 6
TWNSHP:	RNG:	SEC:

Hays County Transportation Department

2171 Yarrington Rd, Suite 200, Kyle Texas 78640
(P) 512-393-7385 (Web) www.hayscountytx.com

UTILITY PERMIT APPROVAL LETTER

** Notification must be given **IN WRITING** at least 24 hours before work begins and proper traffic control must be implemented throughout the work zone. **

The utility company or any of its representatives, engineers, contractors, or authorized agents agree to use Best Management Practices to minimize erosion and sedimentation resulting from the proposed installation AND will insure that traffic control measures complying with applicable portions of the Texas Manual of Uniform Traffic Control Devices will be installed and maintained during installation.

General Special Provisions:

1. Construction of this line will begin on or after 3/25/2024 .

Utility Company Information:

Name: MCI Metro
Address: TX
Phone: 2133007569
Contact Name: David Norris

Engineer / Contractor Information:

Name:
Address: 4801 Southwest Pkwy Austin TX 78735
Phone: 5128798294
Contact Name: Daniel LeTexier

Hays County Information:

Utility Permit Number: TRN-2024-7607-UTL
Type of Utility Service: Fiber optic cable and HDPE conduit
Project Description:
Road Name(s): Foster Pl
Subdivision:
Commissioner Precinct:

What type of cut(s) will you be using ? ☒ Boring ☐ Trenching ☐ Overhead ☐ N/A

Authorization by Hays County Transportation Department
The above-mentioned permit was approved in Hays County Commissioners Court on .

03/20/2024

Signature | Title | Date

SHEET INDEX:

1 COVER SHEET: PROJECT INFORMATION
2 KEY MAP
3 CONTACTS
4 LEGEND
5 GENERAL NOTES
6–7 UG ROUTE PLAN, UG ROUTE PROFILE
8–17 CONSTRUCTION TYPICALS
18 TRAFFIC CONTROL TYPICALS

LOCATION MAP:

BARRON_LAKE_STX

(KYLE, TEXAS)(HAYS COUNTY DISTRICT)

BOM

MATERIAL QUANTITIES	UNIT	QTY
AERIAL FIBER W/ 6M STRAND	FT	
AERIAL FIBER OVERLASH	FT	
SNOW SHOE	EA	
ANCHOR/DOWN GUY	EA	
RISER	EA	
DIRECTIONAL BORE W/ (1) 2" HDPE	FT	830
OPEN TRENCH W/ (1) 2" HDPE	FT	
ADDITIONAL 2" HDPE	FT	
MICRODUCT	FT	
30X60X30 CORE HANDHOLE	EA	
36X60X30 HUBBELL HANDHOLE	EA	
24X36X24 NED HANDHOLE	EA	
30X60X30 NED HANDHOLE	EA	
36X60X30 NED HANDHOLE	EA	
864CT FIBERCABLE (W/ SLACK)	FT	830
FIBER SPLICES	EA	

INTERNAL ID: AUS_2003CGZS_30_HCO_10
NFID: 2003CGZS.30
SCOPE OF WORK: SuperNED
FQNID: FIB:BUR::500958702
EWO: 2303BEWI
PROJECT DESCRIPTION:
MCI METRO PROPOSES TO INSTALL 830' OF 864CT FOC ALONG FOSTER PL.

BEGIN
Latitude: N 30.026102
Longitude: W −97.796925

END
Latitude: N 30.027712
Longitude: W −97.795094

MCImetro

SITE NAME: BARRON_LAKE_STX
SITE ADDRESS:
339 FOSTER PL,
KYLE, TX 78640
DATE: 2/22/2024
SCALE: 1" = 40'

REVISIONS

DATE	DESCRIPTION	BY
02/22/24	INITIAL SUBMITTAL	AEM

EXCEPT AS MAY BE OTHERWISE PROVIDED BY CONTRACT, THESE DRAWINGS AND SPECIFICATIONS SHALL REMAIN THE PROPERTY OF MCI METRO BEING ISSUED IN STRICT CONFIDENCE AND SHALL NOT BE REPRODUCED, COPIED, OR USED FOR ANY PURPOSE WITHOUT SPECIFIC WRITTEN PERMISSION.

SAM
4801 Southwest Parkway, Building Two, Suite 100 Austin, Texas, 78735
Ofc: 512.447.0575 email: info@sam.biz
Texas Firm Registration No. 10064300

PROJECT: 1023078031

COVER

PATH: \\SAMINC.AUS\PROJECTS\1023078031\100\SURVEY\CDBINS\NEDESIGN\HCO_10\AUS_2003CGZS_30_HCO_10_RECOVERY.DWG

HAYS COUNTY, TX
BARRON_LAKE_STX

KEY MAP

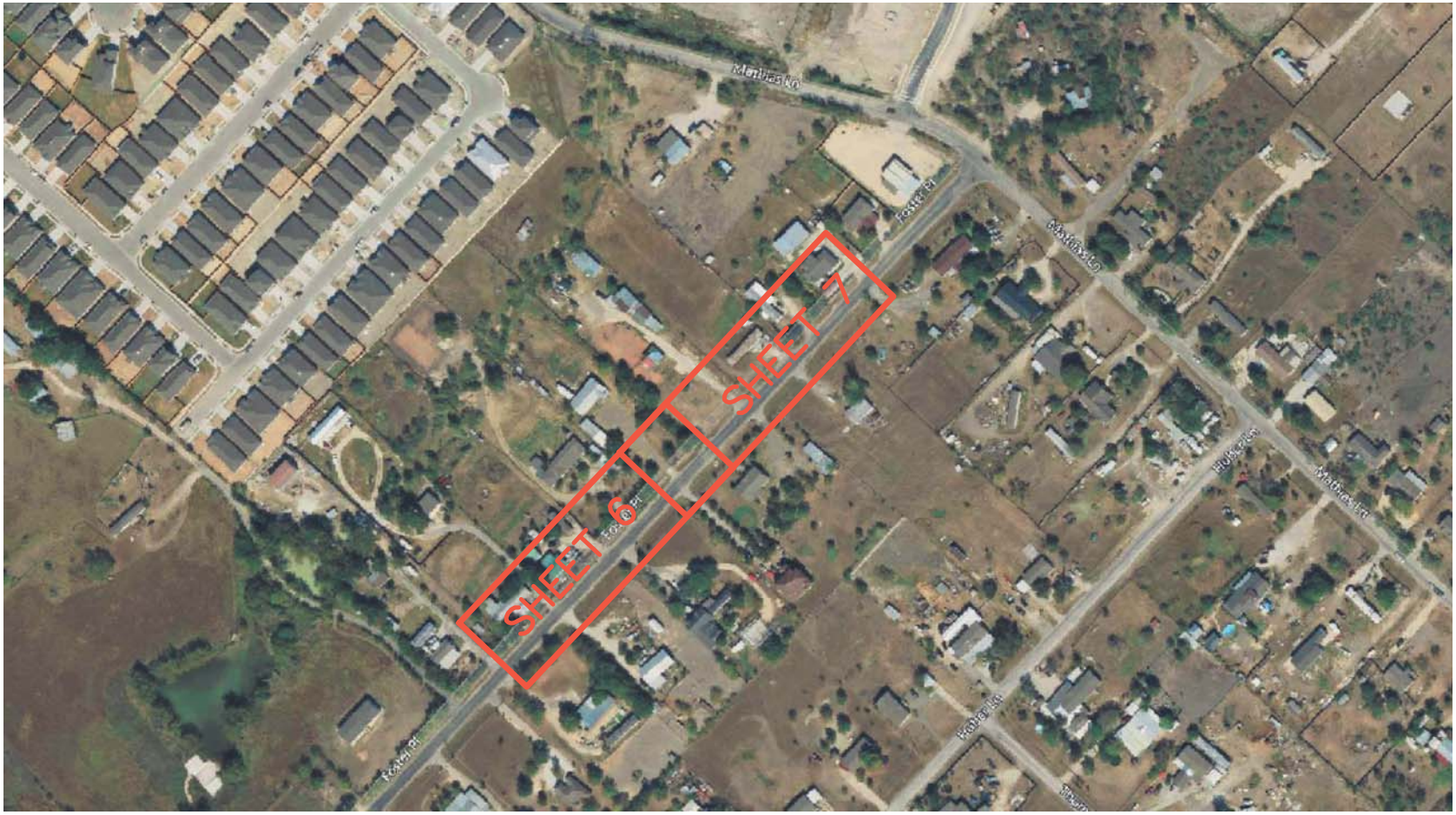

MCImetro

SITE NAME: BARRON_LAKE_STX

SITE ADDRESS:
339 FOSTER PL,
KYLE, TX 78640

DATE: 2/22/2024

SCALE: 1" = 40'

REVISIONS

DATE	DESCRIPTION	BY
02/22/24	INITIAL SUBMITTAL	AEM

EXCEPT AS MAY BE OTHERWISE PROVIDED BY CONTRACT, THESE DRAWINGS AND SPECIFICATIONS SHALL REMAIN THE PROPERTY OF MCI METRO BEING ISSUED IN STRICT CONFIDENCE AND SHALL NOT BE REPRODUCED, COPIED, OR USED FOR ANY PURPOSE WITHOUT SPECIFIC WRITTEN PERMISSION.

SAM
4801 Southwest Parkway, Building Two,
Suite 100 Austin, Texas, 78735
Ofc: 512.447.0575 email: info@sam.biz
Texas Firm Registration No. 10064300

PROJECT: 1023078031

KEYMAP

PATH:\\SAMINC\AUS\PROJECTS\1023078031\100\SURVEY\CDBASE\MEDESIGN\HCD_10\AUS_20030628_30_HCD_10_RECOVERY.DWG

CONTACT SHEET

OWNER:

MCI METRO

DAVID NORRIS
PROJECT MANAGER
(213)300-7569
DAVID.NORRIS@VERIZON.COM

ENGINEERING:

SURVEYING AND MAPPING, LLC
4801 SOUTHWEST PWKY
AUSTIN, TEXAS 78735

DANIEL LETEXIER
512-879-8294
SAMFIBER.PERMITTING@SAM.BIZ

PERMITTING AGENCIES:

HAYS COUNTY

TIMOTHY D. VANDE VORDE
OPERATION SUPERINTENDENT
TRANSPORTATION DEPARTMENT
(512)738-0747
TVANDEVORDE@CO.HAYS.TX.US

SITE NAME: BARRON_LAKE_STX

SITE ADDRESS:
339 FOSTER PL,
KYLE, TX 78640

DATE: 2/22/2024

SCALE: 1" = 40'

REVISIONS

DATE	DESCRIPTION	BY
02/22/24	INITIAL SUBMITTAL	AEM

EXCEPT AS MAY BE OTHERWISE PROVIDED BY CONTRACT, THESE DRAWINGS AND SPECIFICATIONS SHALL REMAIN THE PROPERTY OF MCI METRO BEING ISSUED IN STRICT CONFIDENCE AND SHALL NOT BE REPRODUCED, COPIED, OR USED FOR ANY PURPOSE WITHOUT SPECIFIC WRITTEN PERMISSION.

4801 Southwest Parkway, Building Two,
Suite 100 Austin, Texas, 78735
Ofc: 512.447.0575 email: info@sam.biz
Texas Firm Registration No. 10064300

PROJECT: 1023078031

CONTACTS

PATH:\\SAMINC\AUS\PROJECTS\1023078031\100\SURVEY\CDBASE\MEDESIGN\HCO_1D\AUS_20030228_30_HCO_1D_RECOVERFLDWG

LEGEND

- PROPOSED UNDERGROUND ROUTE
- R/W — ASSUMED RIGHT OF WAY LINE
- EOP — EDGE OF PAVEMENT
- ROADWAY CENTERLINE
- EASEMENT
- SOLID WHITE LINE/FOG LINE
- CURB & GUTTER
- GUARDRAIL
- x — FENCE LINE
- TRAIN TRACKS
- DITCH LINE
- LANDSCAPING
- WATER WAY OUTLINES
- TRAFFIC SIGNAL
- W — UNDERGROUND WATER LINE
- GAS — UNDERGROUND GAS LINE
- WW — UNDERGROUND WASTEWATER SEWER LINE
- SD — UNDERGROUND STORM DRAIN LINE
- E — UNDERGROUND ELECTRIC LINE
- T — UNDERGROUND TELEPHONE LINE
- OH — OVERHEAD UTILITY LINE
- FO — UNDERGROUND FIBER OPTIC
- BRIDGE
- GROUND SYMBOL
- SPLICE SYMBOL
- HH — PROP. HANDHOLE
- FO — FIBER OPTIC HANDHOLE (OTHERS)
- HH — HANDHOLE (OTHERS)
- MH — MANHOLE
- MKR — MARKER
- MKR — MARKER (OTHERS)
- MARKER (RIGHT OF WAY)
- SIGN
- POLE
- TRAFFIC SIGNAL POLE & STREET LIGHT
- ANCHOR
- CLEANOUT W/GROUND RODS
- PEDESTAL
- CULVERT
- METERS
- FIRE HYDRANT
- VALVES
- VENT
- CURB INLET
- TREE
- MAILBOX
- N.T.S — NOT TO SCALE
- UTILITY BOX
- BOREPIT
- TRAFFIC LIGHTS

MCImetro

SITE NAME: BARRON_LAKE_STX

SITE ADDRESS:
339 FOSTER PL,
KYLE, TX 78640

DATE: 2/22/2024

SCALE: 1" = 40'

REVISIONS

DATE	DESCRIPTION	BY
02/22/24	INITIAL SUBMITTAL	AEM

EXCEPT AS MAY BE OTHERWISE PROVIDED BY CONTRACT, THESE DRAWINGS AND SPECIFICATIONS SHALL REMAIN THE PROPERTY OF MCI METRO BEING ISSUED IN STRICT CONFIDENCE AND SHALL NOT BE REPRODUCED, COPIED, OR USED FOR ANY PURPOSE WITHOUT SPECIFIC WRITTEN PERMISSION.

SAM
4801 Southwest Parkway, Building Two,
Suite 100 Austin, Texas, 78735
Ofc: 512.447.0575 email: info@sam.biz
Texas Firm Registration No. 10064300

PROJECT: 1023078031

COVER

PATH:\\SAMINC\AUS\PROJECTS\1023078031\100\SURVEY\CDBASE\MEDESIGN\HOD_10\AUS_20030228_30_HOD_10_REDOVER.DWG

CONSTRUCTION NOTES

1. WHERE TRENCHING TECHNIQUES ARE USED THE MINIMUM DEPTH TO THE TOP OF CONDUIT WILL BE 48" UNLESS OTHERWISE APPROVED BY THE PROJECT ENGINEER. A MAXIMUM DEPTH OF 82" IS REQUIRED TO THE TOP OF THE HDPE.
2. WHENEVER DIRECTIONAL BORING IS UTILIZED TO INSTALL CONDUITS ALL EXCAVATIONS SHALL BE BACKFILLED PER HAYS COUNTY SPECIFICATIONS.
3. VERIFICATION OF THE LOCATION OF ALL UTILITY CROSSINGS IS THE SUBCONTRACTOR'S RESPONSIBILITY. HAND DIG WHERE REQUIRED. ALL KNOWN UTILITIES MUST BE "TEST PITTED".
4. CONTACT TEXAS 811 72 HOURS IN ADVANCE OF CONSTRUCTION AT 1-800-DIG-TESS FOR LOCATION OF BURIED UTILITIES.
5. IT IS THE RESPONSIBILITY OF THE CONTRACTOR TO HAVE ALL HAYS COUNTY TRAFFIC LOOPS LOCATED.
6. CONFIRM WITH MCI METRO, WITH HAYS COUNTY CORRESPONDENCE, THAT ALL TRAFFIC LOOP LOCATIONS HAVE BEEN COORDINATED FOR MARKING.
7. AT THE END OF EACH WORK DAY CONDUIT CAPS WILL BE PLACED ON ALL VACANT DUCTS.
8. A MINIMUM BENDING RADIUS OF 24" FOR FIBER CABLE WILL BE ADHERED TO.
9. MAXIMUM CABLE INSTALLATION TENSION SHALL NOT EXCEED 600 POUNDS.
10. THE CONTRACTOR SHALL BE RESPONSIBLE FOR THE REMOVAL AND STORAGE OF ALL SHRUBBERY TO BE REPLACED.
11. RESTORATION OF THE CONSTRUCTION AREA TO ORIGINAL OR BETTER CONDITION SHALL BE THE RESPONSIBILITY OF THE CONTRACTOR.
12. PLACE 6" OF 3/4" CRUSHED ROCK IN THE BOTTOM OF THE PIT PRIOR TO PLACING THE HANDHOLE.
13. ALWAYS HAND DIG WITHIN 2' OF UTILITIES.
14. PLACE A 100' COIL OF SLACK IN EACH HANDHOLE/MANHOLE.
15. EXCAVATE OUTSIDE THE DRIP LINE OF ALL TREES TO PREVENT ROOT DAMAGE.
16. CONSTRUCTION MATERIALS AND STAGING AREAS ARE NOT PERMITTED WITHIN 25' BUFFER ZONE OF WETLANDS, CREEKS, AND STREAMS.
17. THE CURB AND GUTTER IS NOT TO BE DISTURBED WITHOUT PRIOR APPROVAL.
18. IN THE EVENT THAT IT IS NECESSARY TO REMOVE ANY PORTION OF THE CURB AND GUTTER IT IS TO BE REPLACED SEAM TO SEAM IN A MATCHING CONFIGURATION TO THE ADJACENT CURB AND GUTTER.
19. ALL WORK WILL ADHERE TO THE REQUIREMENTS SET FORTH IN THE LATEST HAYS COUNTY UTILITY POLICY.
20. CONSTRUCTION NOTES SHALL APPLY TO ALL DRAWINGS.
21. A MINIMUM DEPTH OF 112" OR GREATER IS REQUIRED AT ALL RIVER, CREEK, AND/OR GULLY CROSSINGS.

GENERAL NOTES

1. GENERAL NOTES SHALL APPLY TO ALL DRAWINGS.
2. ALL WORK SHALL COMPLY WITH APPLICABLE STATE, COUNTY, & LOCAL REGULATORY AGENCIES. INCLUDING BUT NOT LIMITED TO OSHA, HAYS COUNTY, ETC.
3. THE CONTRACTOR SHALL CONTACT THE ADJACENT PROPERTY OWNERS A MINIMUM OF 12 HOURS IN ADVANCE OF CONSTRUCTION AT THE WORK SITE.
4. ALL TRAFFIC CONTROL DEVICES SHALL BE IN PLACED BEFORE WORK IS STARTED. DEVICES NO LONGER REQUIRED SHALL BE REMOVED AS SOON AS POSSIBLE.
5. PEDESTRIAN TRAFFIC AREAS MUST BE MAINTAINED AT ALL TIMES. PEDESTRIANS MAY NOT BE REROUTED ONTO PRIVATE PROPERTY OR INTO STREETS.
6. NO EQUIPMENT OR MATERIALS SHALL BE STORED OR PERMITTED TO STAND UNPROTECTED WHERE TRAFFIC IS MAINTAINED.
7. NO EQUIPMENT OR MATERIALS SHALL BE STORED ON ROAD SURFACE AT ANY TIME.
8. NO EQUIPMENT OR MATERIALS SHALL BE STORED ON SIDEWALK AT ANY TIME.
9. EXCAVATION MATERIAL SHALL BE STORED AWAY FROM THE PAVED ROADWAY. ALL SPILLED MATERIAL WILL BE REMOVED IMMEDIATELY.
10. EXISTING SIGNS, DELINEATORS, GUARDRAILS, MARKERS, TREES, SHRUBS, FENCES, WALKS, STEPS, ETC., THAT ARE DISTURBED BY THIS CONSTRUCTION SHALL BE REPLACED OR RESTORED TO THEIR ORIGINAL CONDITION OR TO THE SATISFACTION OF THE INSPECTING ENGINEER, PROPERTY OWNER, CITY, COUNTY, STATE AND/OR ANY OTHER AGENCY HAVING AUTHORITY/JURISDICTION.
11. CITY, COUNTY, STATE ROAD SIGNS, DELINEATORS, GUARDRAILS, ETC. SHALL NOT BE REMOVED. WRITTEN PERMISSION SHALL BE REQUIRED PRIOR TO TO ANY EXCAVATION IN THIS AREA.
12. ALL WORK SHALL BE PERFORMED IN ACCORDANCE WITH THE CITY, COUNTY, STATE SPECIFICATIONS AND STANDARDS.
13. ALL PERSONS WHO FLAG TRAFFIC ON STATE RIGHT-OF-WAY MUST BE CERTIFIED.
14. ALL SURFACE AND SUBSURFACE RESTORATION IS TO BE IDENTICAL TO THE ADJACENT UNDISTURBED AREAS.
15. THE CONTRACTOR IS RESPONSIBLE FOR ANY UTILITY DAMAGES. WHEN ANY PERSON DAMAGES A UTILITY LINE OR PROTECTIVE COATING DURING EXCAVATION OR DEMOLITION THE ONSITE COUNTY INSPECTOR AND THE AFFECTED UTILITY WILL BE NOTIFIED.
16. ON ALL WORK ASSOCIATED WITH HAYS COUNTY PROJECTS THE RESIDENT ADMINISTRATOR FOR HAYS COUNTY MUST BE NOTIFIED AT LEAST 48 HRS BEFORE STARTING WORK.
17. CONTRACTOR IS RESPONSIBLE FOR ALL COMPACTING AND SEDIMENT CONTROL REGULATIONS.

* THESE PLANS MEET OR EXCEED HAYS COUNTY ROAD AND BRIDGE STANDARDS AND SPECIFICATIONS.

** NO HANDHOLES ARE TO BE PLACED WITHIN DITCH LINES.

ALL DRIVEWAYS WILL BE BORED.

ADDITIONAL NOTES

1. CONTRACTOR RESPONSIBLE FOR INSTALLATION/REPAIR/REPLACE OF MAILBOXES AND SIGNS. MAILBOXES AND SIGNS SHALL BE INSTALLED IN ACCORDANCE WITH HAYS COUNTY STANDARDS.

2. CONTRACTOR SHALL REPLACE ALL AREAS WITHIN HAYS COUNTY RIGHT-OF-WAY TO ORIGINAL CONDITION.

3. CONSTRUCTION SHALL NOT CHANGE OR IMPACT EXISTING DRAINAGE CONDITIONS.

4. NATURAL AREAS WITHIN HAYS COUNTY RIGHT-OF-WAY WHICH ARE DISTURBED SHALL BE RE VEGETATED OR STABILIZED WITH SOIL RETENTION BLANKETS.

5. MINIMUM OF 4' SEPARATION MUST BE MAINTAINED BETWEEN THE BORES AND ALL CULVERTS.

MCImetro

SITE NAME: BARRON_LAKE_STX

SITE ADDRESS:
339 FOSTER PL,
KYLE, TX 78640

DATE: 2/22/2024

SCALE: 1" = 40'

REVISIONS

DATE	DESCRIPTION	BY
02/22/24	INITIAL SUBMITTAL	AEM

EXCEPT AS MAY BE OTHERWISE PROVIDED BY CONTRACT, THESE DRAWINGS AND SPECIFICATIONS SHALL REMAIN THE PROPERTY OF MCI METRO BEING ISSUED IN STRICT CONFIDENCE AND SHALL NOT BE REPRODUCED, COPIED, OR USED FOR ANY PURPOSE WITHOUT SPECIFIC WRITTEN PERMISSION.

SAM
4801 Southwest Parkway, Building Two,
Suite 100 Austin, Texas, 78735
Ofc: 512.447.0575 email: info@sam.biz
Texas Firm Registration No. 10064300

PROJECT: 1023078031

NOTES

PATH:\\SAMINC\ALIE\PROJECTS\1023078031\100\SURVEY\CDBINS\WEDESIGN\HOD_10\AUS_20030228_30_HOD_10_RECOVERLDWG

HAYS COUNTY, TX

BARRON_LAKE_STX

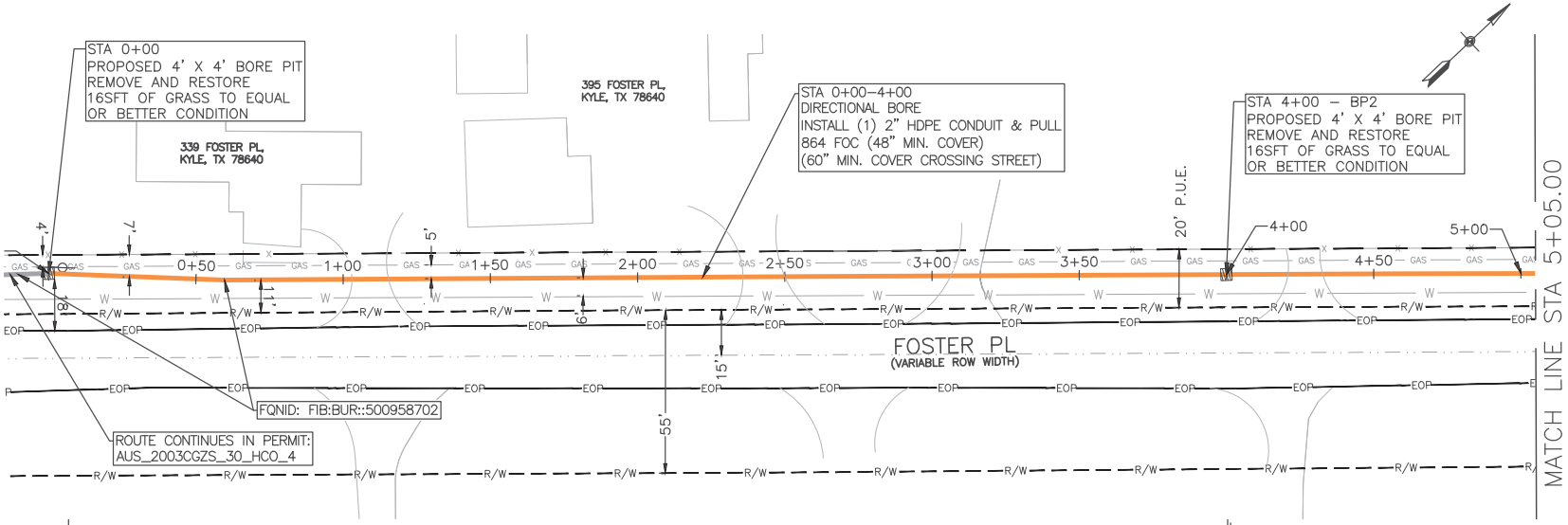

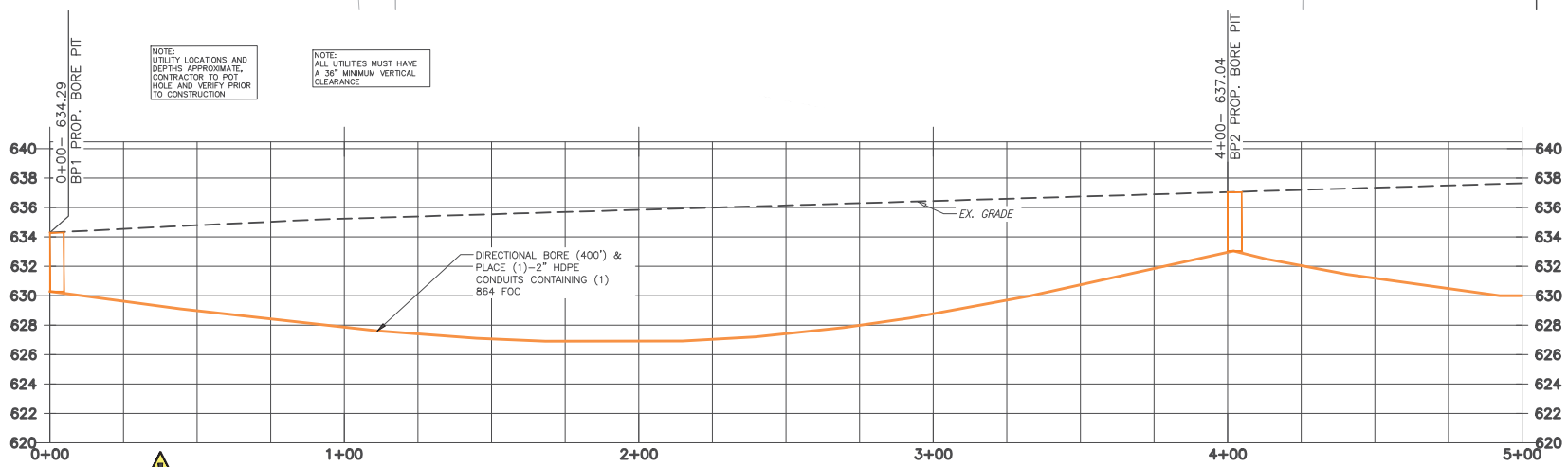

CAUTION!
USE CARE
UNDERGROUND
UTILITIES IN AREA

CONTRACTORS NOTE:

ALL LINE WORK AND UTILITY LOCATIONS ARE APPROXIMATE
CONTRACTOR IS RESPONSIBLE FOR
EXACT LOCATIONS.

PROFILE SCALE:
H: 1"=40'
V: 1"=8'

MCImetro

CAUTION:

ALL UTILITY LOCATIONS DEPICTED ARE APPROXIMATE, CONTRACTORS REQUIRED TO TEST HOLE/POT HOLE, EXPOSE, DAYLIGHT ALL UTILITY CROSSINGS AND CALL 811 PRIOR TO CONSTRUCTION.

ANY UTILITIES CLOSER THAN 3' HORIZONTAL SEPARATION TO AN OPEN TRENCH OR BORE PIT, HAND DIGGING REQUIRED.RIGHT OF WAY LOCATION(S) DEPICTED ARE APPROXIMATE AND BASED UPON PUBLIC RECORDS, CONTRACTORS REQUIRED TO VERIFY PRIOR TO CONSTRUCTION.

CONTRACTOR TO MAINTAIN MINIMUM CONSTRUCTION CLEARANCE REQUIREMENTS FROM ALL JURISDICTION AND THIRD PARTY INFRASTRUCTURE.

UTILITIES SHOWN ARE BASED UPON PUBLIC AVAILABLE AS-BUILT PLANS AND UTILITY MARKINGS LOCATED IN THE FIELD.

SITE: BARRON_LAKE_STX

SITE ADDRESS:
339 FOSTER PL, KYLE,
TX 78640

DATE: 2/22/2024

SCALE: 1" = 40'

REVISIONS

DATE	DESCRIPTION	BY
02/22/24	INITIAL SUBMITTAL	AEM

EXCEPT AS MAY BE OTHERWISE PROVIDED BY CONTRACT. THESE DRAWINGS AND SPECIFICATIONS SHALL REMAIN THE PROPERTY OF FIBERLIGHT, LLC BEING ISSUED IN STRICT CONFIDENCE AND SHALL NOT BE REPRODUCED, COPIED, OR USED FOR ANY PURPOSE WITHOUT SPECIFIC WRITTEN PERMISSION.

SAM
4801 Southwest Parkway, Building Two,
Suite 100 Austin, Texas, 78735
Ofc: 512.447.0575 email: info@sam.biz
Texas Firm Registration No. 10064300

PROJECT: 1023078031

PLAN

SHEET 6 OF 18

P:\PATH-1\SAMINC\AUS\PROJECTS\1023078031\1.0\SURVEY\QGIS\MS_WIDESIGN\HCO_1.0\AUS_2003CGZS_30_HCO_1.0_REC0VER.DWG

HAYS COUNTY, TX
BARRON_LAKE_STX

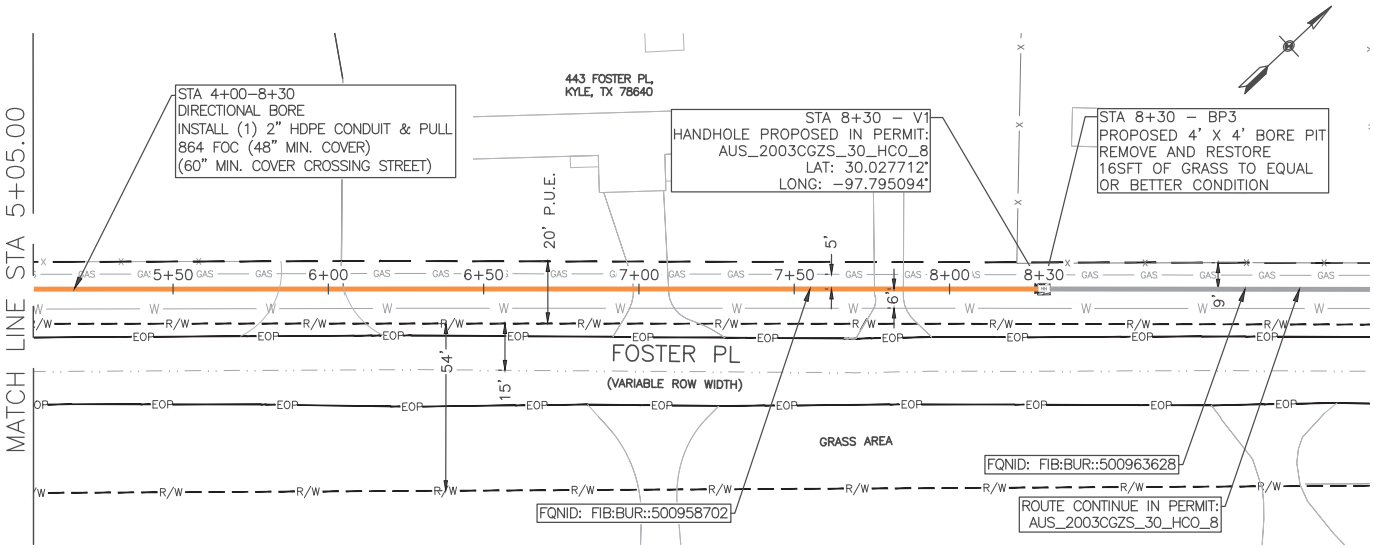

NOTE:
UTILITY LOCATIONS AND DEPTHS APPROXIMATE, CONTRACTOR TO POT HOLE AND VERIFY PRIOR TO CONSTRUCTION

NOTE:
ALL UTILITIES MUST HAVE A 36" MINIMUM VERTICAL CLEARANCE

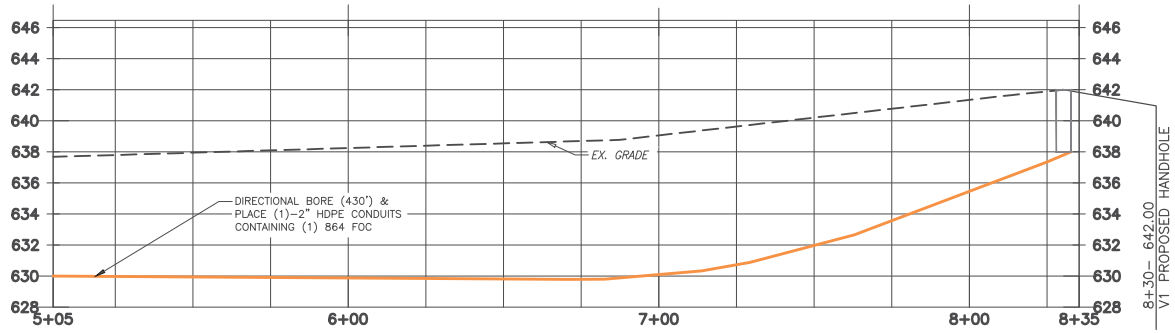

CAUTION!
USE CARE
UNDERGROUND
UTILITIES IN AREA

CONTRACTORS NOTE:
ALL LINE WORK AND UTILITY LOCATIONS ARE APPROXIMATE
CONTRACTOR IS RESPONSIBLE FOR
EXACT LOCATIONS.

PROFILE SCALE:
H: 1"=40'
V: 1"=8'

MCImetro

CAUTION:
ALL UTILITY LOCATIONS DEPICTED ARE APPROXIMATE, CONTRACTORS REQUIRED TO TEST HOLE/POT HOLE, EXPOSE, DAYLIGHT ALL UTILITY CROSSINGS AND CALL 811 PRIOR TO CONSTRUCTION.

ANY UTILITIES CLOSER THAN 3' HORIZONTAL SEPARATION TO AN OPEN TRENCH OR BORE PIT, HAND DIGGING REQUIRED.RIGHT OF WAY LOCATION(S) DEPICTED ARE APPROXIMATE AND BASED UPON PUBLIC RECORDS, CONTRACTORS REQUIRED TO VERIFY PRIOR TO CONSTRUCTION.

CONTRACTOR TO MAINTAIN MINIMUM CONSTRUCTION CLEARANCE REQUIREMENTS FROM ALL JURISDICTION AND THIRD PARTY INFRASTRUCTURE.

UTILITIES SHOWN ARE BASED UPON PUBLIC AVAILABLE AS–BUILT PLANS AND UTILITY MARKINGS LOCATED IN THE FIELD.

SITE: BARRON_LAKE_STX

SITE ADDRESS:
339 FOSTER PL, KYLE,
TX 78640

DATE: 2/22/2024

SCALE: 1" = 40'

REVISIONS

DATE	DESCRIPTION	BY
02/22/24	INITIAL SUBMITTAL	AEM

EXCEPT AS MAY BE OTHERWISE PROVIDED BY CONTRACT. THESE DRAWINGS AND SPECIFICATIONS SHALL REMAIN THE PROPERTY OF FIBERLIGHT, LLC BEING ISSUED IN STRICT CONFIDENCE AND SHALL NOT BE REPRODUCED, COPIED, OR USED FOR ANY PURPOSE WITHOUT SPECIFIC WRITTEN PERMISSION.

SAM
4801 Southwest Parkway, Building Two,
Suite 100 Austin, Texas, 78735
Ofc: 512.447.0575 email: info@sam.biz
Texas Firm Registration No. 10064300

PROJECT: 1023078031

PLAN

SHEET 7 OF 18

P:\PATH-1\SAMINC\AUS\PROJECTS\1023078031\1.0\SURVEY\DRAWS\REDESIGN\HCO_10\AUS_2003CGZS_30_HCO_10_REDOVER.DWG

HAYS COUNTY, TX
BARRON_LAKE_STX

MATERIAL PROPERTIES

THE FOLLOWING MATERIAL PROPERTIES FOR POLYMER CONCRETE PRODUCTS WERE ESTABLISHED THROUGH INDEPENDENT THIRD PARTY TESTING:

COMPRESSIVE STRENGTH	ASTM C 579	> 12,500 PSI
FLEXURAL STRENGTH (REINFORCED)	ASTM D 790	> 7,500 PSI
FLEXURAL STRENGTH (NON-REINFORCED)	ASTM D 790	> 3,000 PSI
MODULAS OF RUPTURE	ASTM C 99	□ 3,000 PSI
WATER ABSORPTION	ASTM C 97	□ 0.25%
IMPACT RESISTANCE	ASTM D 2444	> 70 FT-LB
FRICTION COEFFICIENT	ASTM C 1028	> 0.5
CHEMICAL RESISTANCE	ASTM D 543	RESISTANT, > 75% RETENTION PHYSICAL PROPERTIES

THIS UNIT (BODY & LID) MEETS OR EXCEEDS THE REQUIREMENTS OF SCTE 77 TIER 22 AND 30K PERFORMANCE (DESIGN LOAD: 30,000 LBS / TEST LOAD: 45,000 LBS)

T22/30K STANDARD HANDHOLE
DESIGN LOAD: 30,000 LBS
TEST LOAD 45,000 LBS

REVISION HISTORY				
REV	DESCRIPTION	REV BY	DATE	APPROVED
D	CHANGE ESTIMATED WEIGHTS AND LOAD RATE MARKING UPDATED TO 30K: DESIGN LOAD: 30,000 LBS. TEST LOAD 45,000 LBS	GTORRES	12/16/2019	AGARCIA

CUSTOMER APPROVAL
PRODUCT IS APPROVED IN ACCORDANCE WITH THE SPECIFICATIONS DESCRIBED ON THIS SHEET.

SIGNATURE DATE

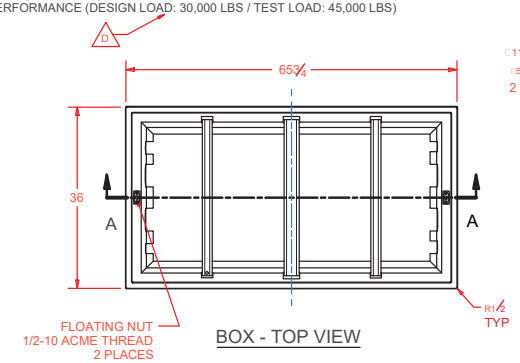

BOX - TOP VIEW

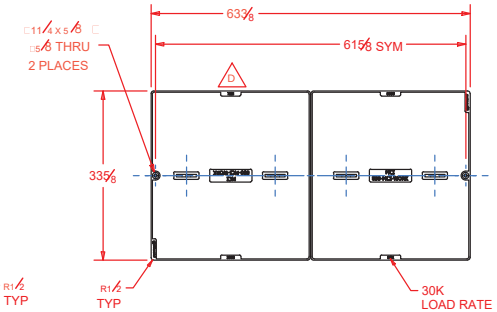

LID - TOP VIEW

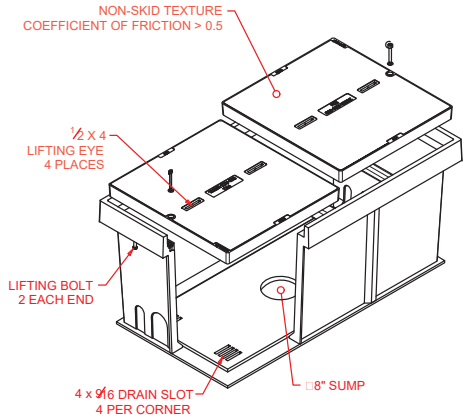

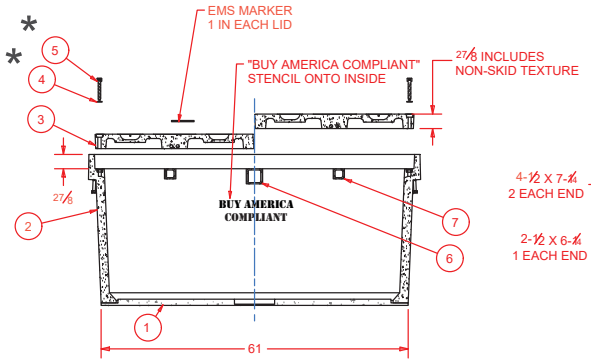

SECTION A-A
WITH LID AND HARDWARE SHOWN

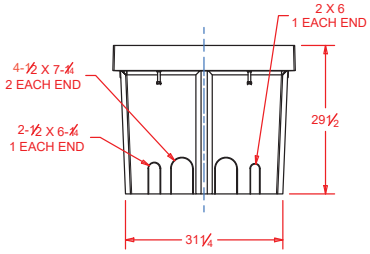

END VIEW

MATERIAL: POLYMER CONCRETE WITH FRP FLOOR.
NOTE: FOR SKU 30606100K BAG ALL HARDWARE MARKED WITH (*) AND TAPE BAG TO 3X3 CROSS BRACE

ITEM	QTY	SKU	DESCRIPTION
7	2	0700557	SQ TUBE 2X2X1/4 31 LONG GALV
6	1	0700569	SQ TUBE 3X3X1/4 31 LONG GALV
5	2	05823400	BOLT, JOHNNY, SS, 1/2-10 ACME X 3-3/4 LONG HEX PIN
4	2	HWH-F11	WASHER, FLAT SST .531 ID x 1.062 OD .095 THICK
3	2	30605015	LID, PC3060 T22/30K - MCI
2	1	30602030	PC3060-30 BODY
1	1	30609000	FLOOR, FG 3060

Parts List

**

CUSTOMER FORMAT DRAWING
TOTAL EST. UNIT WEIGHT: 810 LBS
D EST. LID WEIGHT: 136 LBS (EA HALF) | EST. BODY WITH FLOOR WEIGHT: 535 LBS

UNLESS OTHERWISE SPECIFIED ALL DIMENSIONS ARE IN INCHES
TOLERANCE:
.XXX = □.005
.XX = □.010
.X = □.030
FRACTION = □ 1/8
ANGLE = □ 1□

THIS DOCUMENT IS THE PROPERTY OF OLDCASTLE ENCLOSURE SOLUTIONS. IT IS CONFIDENTIAL, SUBMITTED FOR REFERENCE PURPOSES ONLY, AND SHALL NOT BE USED IN ANY WAY INJURIOUS TO THE INTERESTS OF, OR WITHOUT THE WRITTEN PERMISSION OF OLDCASTLE ENCLOSURE SOLUTIONS.

COPYRIGHT: 2014 Oldcastle Enclosure Solutions
All Rights Reserved

e Enclosure Solutions
801 S PINE ST
MADERA, CA 93637
1-800-486-7070

DRAWN	RNUNES	4/2/2015
CHECKED	MOLLINS	5/3/2017
QA		
MFG		
APPROVED	AGARCIA	7/21/2017

TITLE: UNIT, PC3060-30 30K - MCI 800-MCI-WORK - CONDUIT KNOCKOUTS AND FRP FLOOR

SIZE	DWG NO	REV
C	30606100 / 30606100K	D

SCALE | SHEET 1 OF 1

LAST PLOT: 4/2/2015 @ 15:16

MCImetro

SITE NAME: BARRON_LAKE_STX
SITE ADDRESS:
339 FOSTER PL,
KYLE, TX 78640
DATE: 2/22/2024
SCALE: 1" = 40'

REVISIONS		
DATE	DESCRIPTION	BY
02/22/24	INITIAL SUBMITTAL	AEM

EXCEPT AS MAY BE OTHERWISE PROVIDED BY CONTRACT, THESE DRAWINGS AND SPECIFICATIONS SHALL REMAIN THE PROPERTY OF MCI METRO BEING ISSUED IN STRICT CONFIDENCE AND SHALL NOT BE REPRODUCED, COPIED, OR USED FOR ANY PURPOSE WITHOUT SPECIFIC WRITTEN PERMISSION.

SAM
4801 Southwest Parkway, Building Two, Suite 100 Austin, Texas, 78735
Ofc: 512.447.0575 email: info@sam.biz
Texas Firm Registration No. 10064300

PROJECT: 1023078031

36X60X30 OC HH

PATH:\\SAMINC\ALIS\PROJECTS\1023078031\1100\SURVEY\02BASE\REDESIGN\HCD_1X\ALIS_2000X022S_30_HCD_1D_RECOVER.DWG

HAYS COUNTY, TX
BARRON_LAKE_STX

COTT MARKER INSTALLATION DETAIL

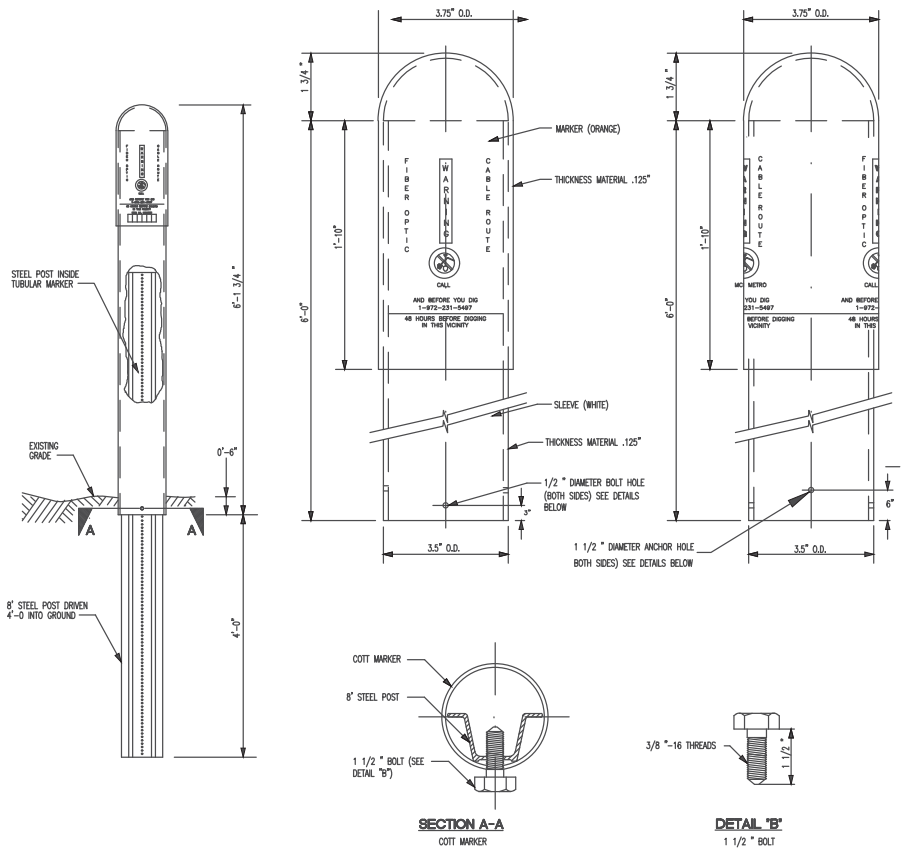

SECTION A-A
COTT MARKER

DETAIL "B"
1 1/2 " BOLT

FLAT PLASTIC MARKER

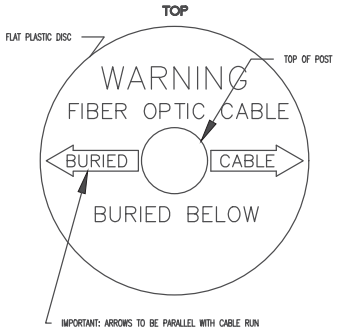

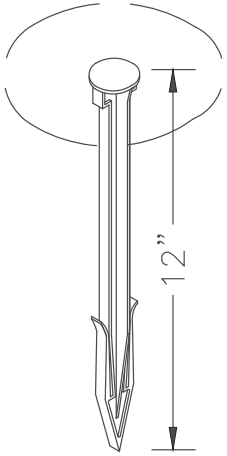

MCImetro

SITE NAME: BARRON_LAKE_STX

SITE ADDRESS:
339 FOSTER PL,
KYLE, TX 78640

DATE: 2/22/2024

SCALE: 1" = 40'

REVISIONS

DATE	DESCRIPTION	BY
02/22/24	INITIAL SUBMITTAL	AEM

EXCEPT AS MAY BE OTHERWISE PROVIDED BY CONTRACT, THESE DRAWINGS AND SPECIFICATIONS SHALL REMAIN THE PROPERTY OF MCI METRO BEING ISSUED IN STRICT CONFIDENCE AND SHALL NOT BE REPRODUCED, COPIED, OR USED FOR ANY PURPOSE WITHOUT SPECIFIC WRITTEN PERMISSION.

SAM
4801 Southwest Parkway, Building Two,
Suite 100 Austin, Texas, 78735
Ofc: 512.447.0575 email: info@sam.biz
Texas Firm Registration No. 10064300

PROJECT: 1023078031

CABLE MARKER

SHEET 9 OF 18

PATH:\\SAMINC\AUS\PROJECTS\1023078031\100\SURVEY\CDBINSE\NEDESIGN\H20_10\AUS_20030228_30_H20_10_RECOVERLDWG

BURIED CONSTRUCTION TYPICALS – 1

PLACEMENT - TYPICALS

TYPICAL "A"

PLACE CONDUIT CROSS SECTION

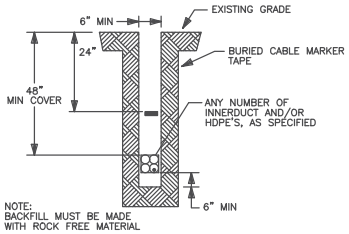

NOTE:
BACKFILL MUST BE MADE WITH ROCK FREE MATERIAL

TYPICAL "B"

PLACE HDPE (DIRECTIONAL BORE) CROSS SECTION

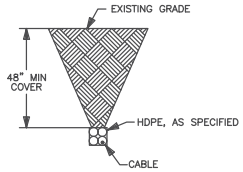

CONDUIT CONFIGURATION

TYPICAL "C"

CABLE IN CONDUIT

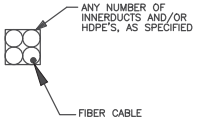

TYPICAL "D"

MULTIPLE CABLE IN CONDUIT

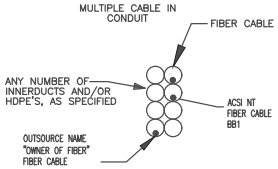

OPEN CUT - TYPICALS

TYPICAL "E"

CONCRETE/PAVEMENT OPEN CUT CROSS SECTION
(VARIES PER PERMIT REQUIREMENT)

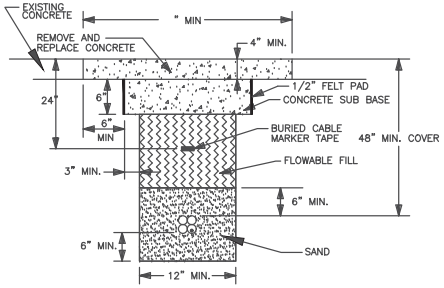

TYPICAL "F"

ASPHALT/PAVEMENT OPEN CUT CROSS SECTION

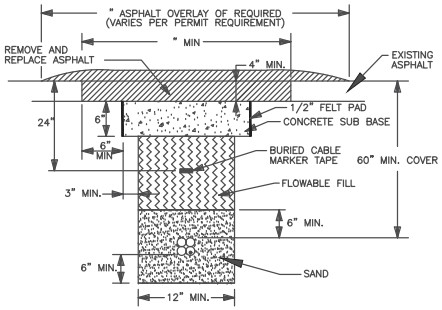

1. THE BOTTOM OF THE TRENCH SHALL BE LEVEL, FLAT AND NOT HAVE ANY ROCK DEBRIS.
2. ALL BACKFILL MUST BE APPROVED BY ENGINEER, AND/OR PERMITTING AUTHORITY INSPECTOR.
3. EXCAVATED MATERIAL MAY BE DEEMED SUITABLE BACKFILL BY ENGINEER AND/OR PERMITTING AUTHORITY INSPECTOR.
4. MINIMUM SIX (6) INCHES OF CLEAN SAND SHALL BE PLACED OVER THE CONDUIT.
5. FLOWABLE FILL MIX DESIGN SHALL BE PER CITY AND/OR PERMITTING AUTHORITY.
6. ALL FLOWABLE FILL AND CONCRETE SHALL BE VIBRATED USING A 2" DIAMETER VIBRATOR.
7. CONCRETE AND ASPHALT THICKNESS SHALL MATCH EXISTING.
8. #4 DOWELS SHOULD BE DRILLED INTO ADJACENT UNDISTURBED CONCRETE TO PREVENT DIFFERENTIAL SETTLEMENT.

MCImetro

SITE NAME: BARRON_LAKE_STX

SITE ADDRESS:
339 FOSTER PL,
KYLE, TX 78640

DATE: 2/22/2024

SCALE: 1" = 40'

REVISIONS

DATE	DESCRIPTION	BY
02/22/24	INITIAL SUBMITTAL	AEM

EXCEPT AS MAY BE OTHERWISE PROVIDED BY CONTRACT, THESE DRAWINGS AND SPECIFICATIONS SHALL REMAIN THE PROPERTY OF MCI METRO BEING ISSUED IN STRICT CONFIDENCE AND SHALL NOT BE REPRODUCED, COPIED, OR USED FOR ANY PURPOSE WITHOUT SPECIFIC WRITTEN PERMISSION.

SAM™
4801 Southwest Parkway, Building Two,
Suite 100 Austin, Texas, 78735
Ofc: 512.447.0575 email: info@sam.biz
Texas Firm Registration No. 10064300

PROJECT: 1023078031

BUR CONST TYP1

PATH:\\SAMINC\AUS\PROJECTS\1023078031\100\SURVEY\028NAS\NEDESIGN\HCO_1D\AUS_20030225_30_HCO_1D_REDOVERLDWG

BURIED CONSTRUCTION TYPICALS - 2

SOD/UNIMPROVED AREA TRENCH RESTORATION TYPICAL

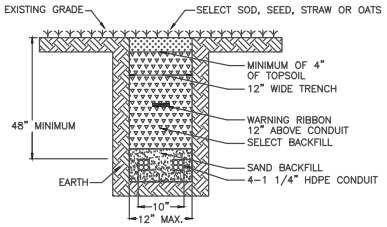

1. ALL BACKFILL MUST BE APPROVED BY ENGINEER OR PERMITTING AUTHORITY INSPECTOR.
2. EXCAVATED MATERIAL MAY BE DEEMED SUITABLE BACKFILL BY ENGINEER, AND/OR PERMITTING AUTHORITY.
3. A MAXIMUM OF EIGHT (8) INCH LIFTS OF BACKFILL MATERIAL WILL BE ALLOWED. FOUR (4) INCHES OF CLEAN SAND SHALL BE PLACED ABOVE THE CONDUIT.
4. THE BOTTOM OF THE TRENCH SHALL BE LEVEL, FLAT, AND NOT HAVE ANY ROCK DEBRIS.
5. ALL DISTURBED GRASS AREAS ARE TO BE SEEDED WITH KENTUCKY 31 FESCUE WITH NUTRIENTS APPLIED AND MAINTAINED TO ACHIEVE A SATISFACTORY GRASS COVER TO CONTROL EROSION.
   IN CORPUS CHRISTI DISTRICT OATS WILL BE PLANTED SEPT. 1 THROUGH NOV 30. (COUNTIES INCLUDED IN CORPUS CHRISTI DISTRICT: KARNES, GOLIAD, BEE, REFUGIO, SAN PATRICIO, LIVE OAK, JIM WELLS, KLEBERG, NUECES, AND ARANSAS.)

SIDEWALK TRENCH RESTORATION TYPICAL

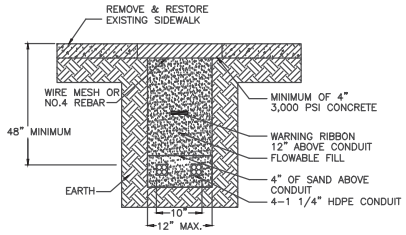

1. REMOVE ENTIRE SIDEWALK PANEL, JOINT TO JOINT.
2. EXPANSION BOARD SHALL BE PLACED ON ALL EXISTING CONCRETE EDGES.
3. FLOWABLE FILL MIX DESIGN SHALL BE PER PERMITTING AUTHORITY SPECIFICATIONS.
4. THE NEW CONCRETE SIDEWALK SHALL BE PLACED LEVEL AND FLAT TO MATCH EXISTING.
5. THE FINISH SHALL MATCH EXISTING SIDEWALK.
6. FOUR (4) INCHES OF CLEAN SAND SHALL BE PLACED OVER THE MULTICELL CONDUIT.
7. THE BOTTOM OF THE TRENCH SHALL BE LEVEL, FLAT, AND NOT HAVE ANY ROCK DEBRIS.
8. CONCRETE REINFORCEMENT SHALL CONSIST OF WIRE MESH 6"x6"x10 GAUGE WIRE OR NO.4 REBAR PLACED ON 12" CENTERS.
9. ALL FLOWABLE FILL AND CONCRETE SHALL BE VIBRATED USING A 2" DIAMETER VIBRATOR.
10. CONCRETE SIDEWALK THICKNESS SHALL MATCH EXISTING.

ASPHALT TRENCH RESTORATION TYPICAL

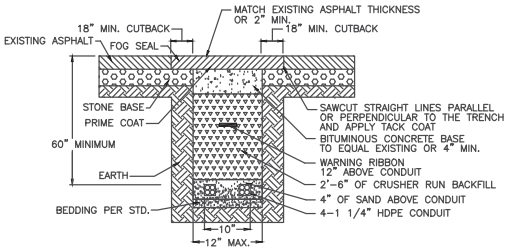

1. BITUMINOUS CONCRETE SURFACE SHALL BE PLACED TO A DEPTH EQUAL TO THE EXISTING SURFACE OR 2" MINIMUM. (COARSE SURFACE)
2. BITUMINOUS CONCRETE BASE SHALL BE PLACED TO A DEPTH EQUAL TO THE EXISTING PAVEMENT OR 4" MINIMUM. (BC)
3. THE TOP 2'-5" OF THE TRENCH BELOW PAVEMENT SHALL BE BACKFILLED WITH CRUSHER RUN.
4. ALL ROAD SURFACE EDGES SHALL BE SAWED IN A STRAIGHT LINE.
5. SS-1 TACK COAT WILL BE APPLIED AT THE RATE OR 0.1 GAL. PER SQ. YARD OVER THE CONCRETE BASE AND THE EDGES OF THE EXISTING ASPHALT.
6. THE ASPHALT PATCH SHALL BE SMOOTH, FLAT AND EVEN WITH EXISTING ASPHALT SURFACE. ALL JOINTS WILL BE SEALED AFTER PAVING.
7. FOUR (4) INCHES OF CLEAN SAND SHALL BE PLACED OVER THE CONDUIT.
8. BOTTOM OF THE TRENCH SHALL BE LEVEL, A 3" SAND BEDDING WILL BE PLACED AS REQUIRED.
9. TYPICAL TRENCH WIDTH IS 12".

MCImetro

SITE NAME: BARRON_LAKE_STX

SITE ADDRESS:
339 FOSTER PL,
KYLE, TX 78640

DATE: 2/22/2024

SCALE: 1" = 40'

REVISIONS

DATE	DESCRIPTION	BY
02/22/24	INITIAL SUBMITTAL	AEM

EXCEPT AS MAY BE OTHERWISE PROVIDED BY CONTRACT, THESE DRAWINGS AND SPECIFICATIONS SHALL REMAIN THE PROPERTY OF MCI METRO BEING ISSUED IN STRICT CONFIDENCE AND SHALL NOT BE REPRODUCED, COPIED, OR USED FOR ANY PURPOSE WITHOUT SPECIFIC WRITTEN PERMISSION.

SAM
4801 Southwest Parkway, Building Two,
Suite 100 Austin, Texas, 78735
Ofc: 512.447.0575 email: info@sam.biz
Texas Firm Registration No. 10064300

PROJECT: 1023078031

BUR CONST TYP2

PATH\\SAMINC\AUS\PROJECTS\1023078031\100\SURVEY\CADWIZ\DESIGN\VOL_10\AUS_20030202_30_JACO_10_RECON\BURI.DWG

TYPICAL CULVERT CROSSING BORE DETAIL

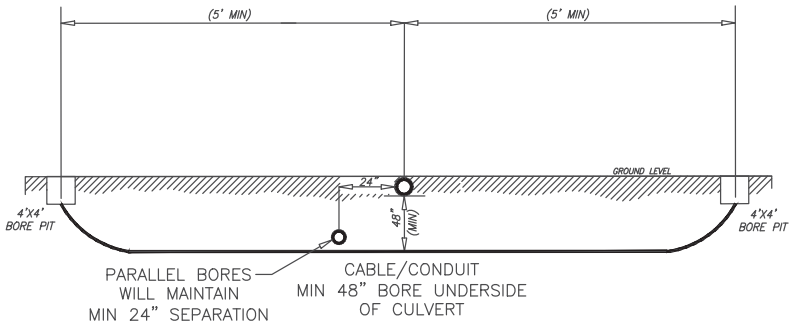

MCImetro

SITE NAME: BARRON_LAKE_STX

SITE ADDRESS:
339 FOSTER PL,
KYLE, TX 78640

DATE: 2/22/2024

SCALE: 1" = 40'

REVISIONS

DATE	DESCRIPTION	BY
02/22/24	INITIAL SUBMITTAL	AEM

EXCEPT AS MAY BE OTHERWISE PROVIDED BY CONTRACT, THESE DRAWINGS AND SPECIFICATIONS SHALL REMAIN THE PROPERTY OF MCI METRO BEING ISSUED IN STRICT CONFIDENCE AND SHALL NOT BE REPRODUCED, COPIED, OR USED FOR ANY PURPOSE WITHOUT SPECIFIC WRITTEN PERMISSION.

SAM™
4801 Southwest Parkway, Building Two,
Suite 100 Austin, Texas, 78735
Ofc: 512.447.0575 email: info@sam.biz
Texas Firm Registration No. 10064300

PROJECT: 1023078031

TYP CULV BORE DET

PATH:\\SAMINC\AUS\PROJECTS\1023078031\100\SURVEY\02BASE\REDESIGN\MCI_10\AUS_20030225_JG_MCI_10_REDOVERLAY.DWG

TYPICAL ROAD/DRIVEWAY CROSSING BORE DETAIL

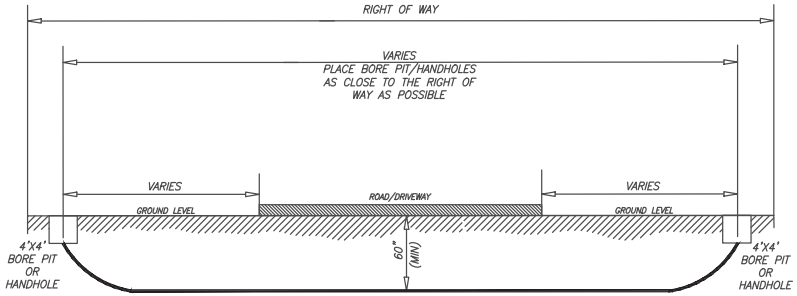

CABLE/CONDUIT

CROSSING UNDER ROADS (1) 2" HDPE
CONDUITS WILL BE PLACED

CROSSING UNDER DRIVEWAYS (1)-2" HDPE
CONDUITS WILL BE PLACED

MCImetro

SITE NAME: BARRON_LAKE_STX

SITE ADDRESS:
339 FOSTER PL,
KYLE, TX 78640

DATE: 2/22/2024

SCALE: 1" = 40'

REVISIONS

DATE	DESCRIPTION	BY
02/22/24	INITIAL SUBMITTAL	AEM

EXCEPT AS MAY BE OTHERWISE PROVIDED BY CONTRACT, THESE DRAWINGS AND SPECIFICATIONS SHALL REMAIN THE PROPERTY OF MCI METRO BEING ISSUED IN STRICT CONFIDENCE AND SHALL NOT BE REPRODUCED, COPIED, OR USED FOR ANY PURPOSE WITHOUT SPECIFIC WRITTEN PERMISSION.

SAM
4801 Southwest Parkway, Building Two,
Suite 100 Austin, Texas, 78735
Ofc: 512.447.0575 email: info@sam.biz
Texas Firm Registration No. 10064300

PROJECT: 1023078031

TYP RD BORE DET

PATH:\\SAMINC\AUS\PROJECTS\1023078031\100\SURVEY\DGNSE\REDESIGN\H20_10\AUS_20030225_30_HDD_10_REDOVER.DWG

GAS PIPELINE CROSSING BORE DETAIL

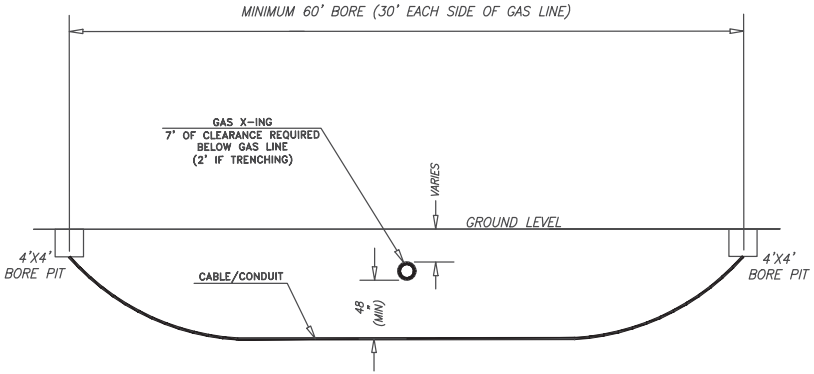

MCImetro

SITE NAME: BARRON_LAKE_STX

SITE ADDRESS:
339 FOSTER PL,
KYLE, TX 78640

DATE: 2/22/2024

SCALE: 1" = 40'

REVISIONS

DATE	DESCRIPTION	BY
02/22/24	INITIAL SUBMITTAL	AEM

EXCEPT AS MAY BE OTHERWISE PROVIDED BY CONTRACT, THESE DRAWINGS AND SPECIFICATIONS SHALL REMAIN THE PROPERTY OF MCI METRO BEING ISSUED IN STRICT CONFIDENCE AND SHALL NOT BE REPRODUCED, COPIED, OR USED FOR ANY PURPOSE WITHOUT SPECIFIC WRITTEN PERMISSION.

SAM™
4801 Southwest Parkway, Building Two,
Suite 100 Austin, Texas, 78735
Ofc: 512.447.0575 email: info@sam.biz
Texas Firm Registration No. 10084300

PROJECT: 1023078031

TYP GAS BORE DETAIL

P:\N\1\SAMINC\AUS\PROJECTS\1023078031\100\SURVEY\CDBASE\REDESIGN\H20_10\AUS_20030228_30_H20_10_REDOVER.DWG

TYPICAL TRACER WIRE TERMINATIONS

DETAIL "B"
GROUND CONNECTION

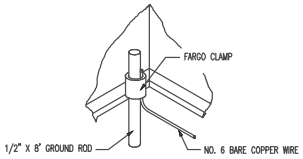

NOTE: GROUND ROD TO BE A MAXIMUM OF INCHES ABOVE FLOOR LEVEL OF HANDHOLE

DETAIL "C"
FARGO CLAMP

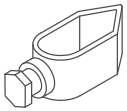

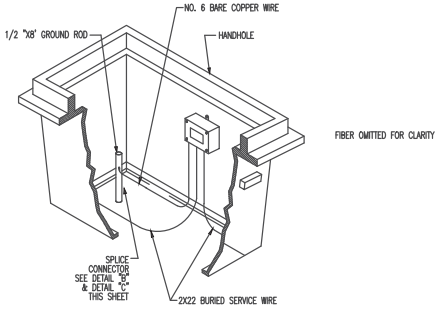

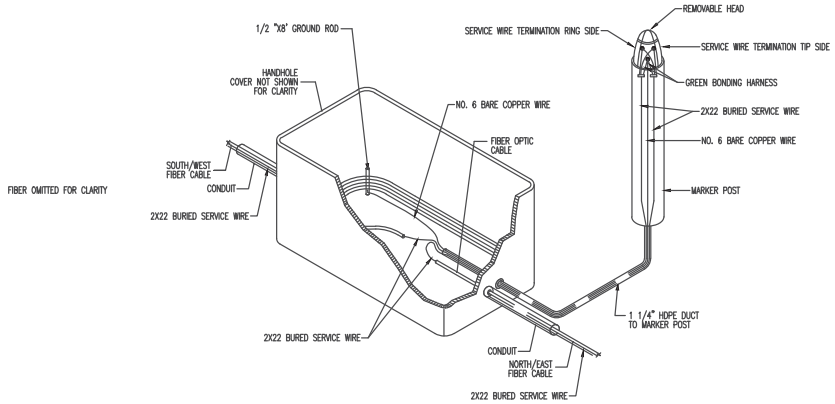

MCImetro

SITE NAME: BARRON_LAKE_STX

SITE ADDRESS:
339 FOSTER PL,
KYLE, TX 78640

DATE: 2/22/2024

SCALE: 1" = 40'

REVISIONS

DATE	DESCRIPTION	BY
02/22/24	INITIAL SUBMITTAL	AEM

EXCEPT AS MAY BE OTHERWISE PROVIDED BY CONTRACT, THESE DRAWINGS AND SPECIFICATIONS SHALL REMAIN THE PROPERTY OF MCI METRO BEING ISSUED IN STRICT CONFIDENCE AND SHALL NOT BE REPRODUCED, COPIED, OR USED FOR ANY PURPOSE WITHOUT SPECIFIC WRITTEN PERMESSION.

SAM
4801 Southwest Parkway, Building Two,
Suite 100 Austin, Texas, 78735
Ofc: 512.447.0575 email: info@sam.biz
Texas Firm Registration No. 10064300

PROJECT: 1023078031

TYP TRACER WIRE

PATH:\\SAMINC\AUS\PROJECTS\1023078031\100\SURVEY\DGNSE\REDESIGN\HDD_10\AUS_20030225_30_HDD_10_RECOVER.DWG

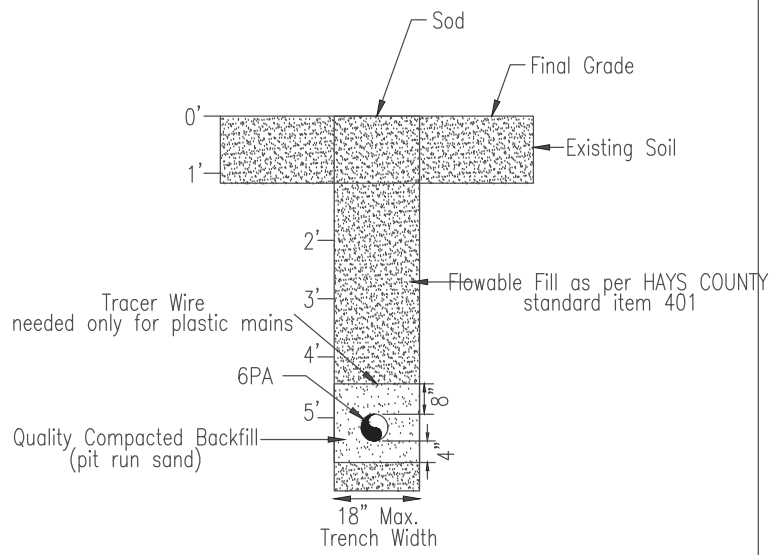

Trench Detail For Earth Excavation Only < 10' from Curb

421 – HYDRAULIC CEMENT CONCRETE (with required SP 421---024)

SPECIFICATION REQUIREMENTS

1) The following will need to be shown on the plans or require a plan note:

A coarse aggregate magnesium sulfate soundness loss other than a maximum OF 18% (optional)

If a value less than 1.0% will be used for the maximum decantation for coarse aggregate (optional)

For all concrete subject to direct traffic if an acid insoluble value less than 60% will be used (optional)

If blending of fine aggregates to meet the acid insoluble requirement will not be allowed (optional)

If a sand equivalent of less than 80 will be used (optional)

For Class K concrete if fineness modulus values outside the range of 2.60 and 2.80 will be allowed (optional)

If mortar and grout will be used in the project (required)

Strength requirements for concrete Classes F, H, K, and HES if used (required)

Coarse aggregate grade for Class K and HES if used (required)

If the responsibility of the contractor is waived regarding furnishing and maintaining: (optional)

- o test molds
- o curing facilities
- o maturity meters if used,
- o wheelbarrow or other container acceptable for the sampling of concrete
- o strength-testing equipment in accordance with the controlling test (ie., compression machine or flexural beam breakers)

If the controlling strength test will not be compressive (optional)

If the contractor will not be responsible for the handling and transportation of test specimens and the cleaning of molds, if needed (optional)

When sulfate resistant concrete is required (required)

HAYS COUNTY plant/truck inspection/certification in lieu of NRMCA/professional engineer certification for NON-STRUCTURAL CONCRETE ONLY (optional)

To allow the use of volumetric mixers for structural concrete (optional)

To designate the use of high performance concrete classes: C(HPC), F(HPC), H(HPC), and S(HPC) (required)

Designate an alternate strength over-design requirement other than what is in the specification only for Class K, non-structural concrete and Class C concrete not used for bridge class structures (optional)

Designate dosage rate of corrosion inhibiting admixture if used (required)

To waive air entrainment requirements for all concrete classes or individual concrete classes (already waived for Class B and drilled shaft concrete) (optional – refer to Bridge and Pavement Design Manuals)

To alter target air contents (currently set at 4.0% for pavements and 5.5% for structural concrete) (optional)

MCImetro

SITE NAME: BARRON_LAKE_STX

SITE ADDRESS:
339 FOSTER PL,
KYLE, TX 78640

DATE: 2/22/2024

SCALE: 1" = 40'

REVISIONS

DATE	DESCRIPTION	BY
02/22/24	INITIAL SUBMITTAL	AEM

EXCEPT AS MAY BE OTHERWISE PROVIDED BY CONTRACT, THESE DRAWINGS AND SPECIFICATIONS SHALL REMAIN THE PROPERTY OF MCI METRO BEING ISSUED IN STRICT CONFIDENCE AND SHALL NOT BE REPRODUCED, COPIED, OR USED FOR ANY PURPOSE WITHOUT SPECIFIC WRITTEN PERMISSION.

SAM
4801 Southwest Parkway, Building Two,
Suite 100 Austin, Texas, 78735
Ofc: 512.447.0575 email: info@sam.biz
Texas Firm Registration No. 10064300

PROJECT: 1023078031

TRENCHDET2

PATH:\\SAMINC\AUS\PROJECTS\1023078031\100\SURVEY\DGNS\REDESIGN\HCD_TOVAR_20030228_30_HCD_10_RECOVER.DWG

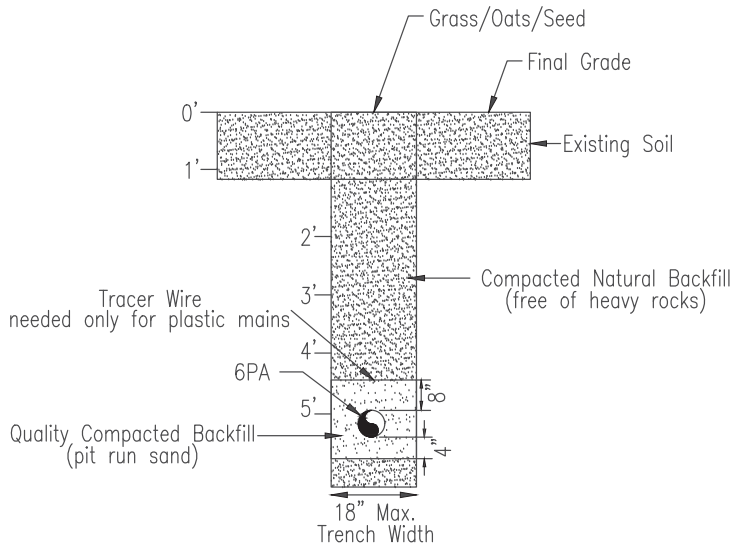

Trench Detail For Earth Excavation > 10' from Curb

MCImetro

SITE NAME: BARRON_LAKE_STX

SITE ADDRESS:
339 FOSTER PL,
KYLE, TX 78640

DATE: 2/22/2024

SCALE: 1" = 40'

REVISIONS

DATE	DESCRIPTION	BY
02/22/24	INITIAL SUBMITTAL	AEM

EXCEPT AS MAY BE OTHERWISE PROVIDED BY CONTRACT, THESE DRAWINGS AND SPECIFICATIONS SHALL REMAIN THE PROPERTY OF MCI METRO BEING ISSUED IN STRICT CONFIDENCE AND SHALL NOT BE REPRODUCED, COPIED, OR USED FOR ANY PURPOSE WITHOUT SPECIFIC WRITTEN PERMISSION.

SAM™
4801 Southwest Parkway, Building Two,
Suite 100 Austin, Texas, 78735
Ofc: 512.447.0575 email: info@sam.biz
Texas Firm Registration No. 10064300

PROJECT: 1023078031

TRENCHDET3

PATH:\\SAMINC\AUS\PROJECTS\1023078031\100\SURVEY\DGNBASE\REDESIGN\HOD_10\AUS_20030C2B_30_HOD_10_REDOWER.DWG

HAYS COUNTY, TX

BARRON_LAKE_STX

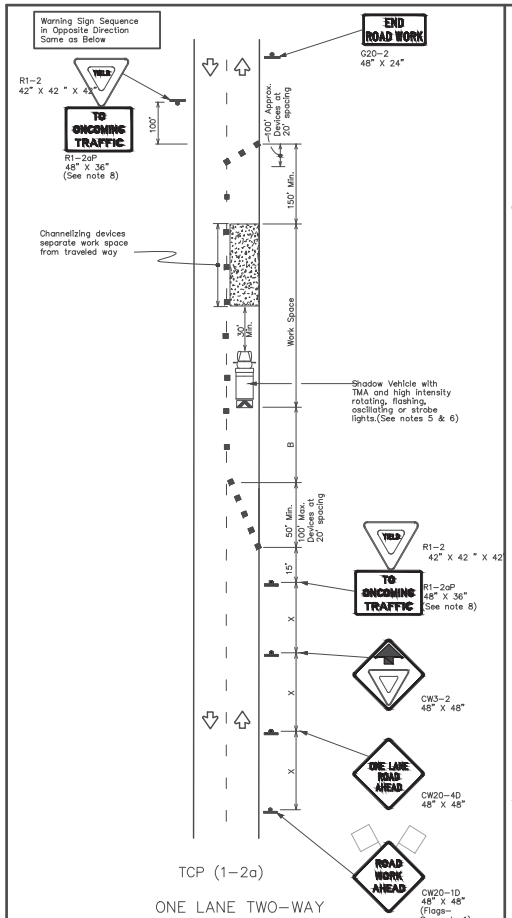

TCP (1-2a)

ONE LANE TWO-WAY CONTROL WITH YIELD SIGNS

(Less than 2000 ADT - See note 7)

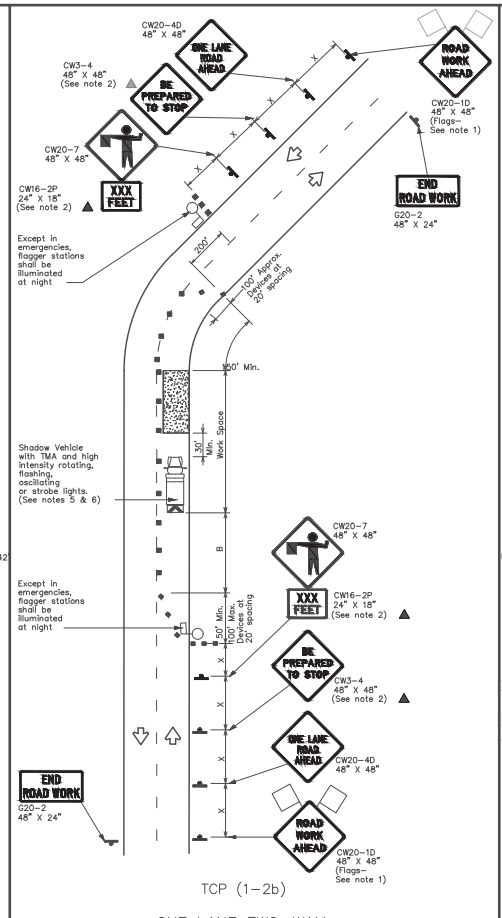

TCP (1-2b)

ONE LANE TWO-WAY CONTROL WITH FLAGGERS

LEGEND

	Type 3 Barricade		Channelizing Devices
	Heavy Work Vehicle		Truck Mounted Attenuator (TMA)
	Trailer Mounted Flashing Arrow Board		Portable Changeable Message Sign (PCMS)
	Sign		Traffic Flow
	Flag		Flagger

Posted Speed *	Formula	Minimum Desirable Taper Lengths ** 10' Offset	11' Offset	12' Offset	Suggested Maximum Spacing of Channelizing Devices On a Taper	On a Tangent	Minimum Sign Spacing "X" Distance	Suggested Longitudinal Buffer Space "B"	Stopping Sight Distance
30	$L = \frac{WS^2}{60}$	150'	165'	180'	30'	60'	120'	90'	200'
35		205'	225'	245'	35'	70'	160'	120'	250'
40		265'	295'	320'	40'	80'	240'	155'	305'
45	L=WS	450'	495'	540'	45'	90'	320'	195'	360'
50		500'	550'	600'	50'	100'	400'	240'	425'
55		550'	605'	660'	55'	110'	500'	295'	495'
60		600'	660'	720'	60'	120'	600'	350'	570'
65		650'	715'	780'	65'	130'	700'	410'	645'
70		700'	770'	840'	70'	140'	800'	475'	730'
75		750'	825'	900'	75'	150'	900'	540'	820'

* Conventional Roads Only

** Taper lengths have been rounded off.
L=Length of Taper(FT) W=Width of Offset(FT) S=Posted Speed(MPH)

TYPICAL USAGE				
MOBILE	SHORT DURATION	SHORT TERM STATIONARY	INTERMEDIATE TERM STATIONARY	LONG TERM STATIONARY
		✓	✓	

GENERAL NOTES

1. Flags attached to signs where shown are REQUIRED.
2. All traffic control devices illustrated are REQUIRED, except those denoted with the triangle symbol may be omitted when stated elsewhere in the plans, or for routine maintenance work, when approved by the Engineer.
3. The CW3-4 "BE PREPARED TO STOP" sign may be installed after the CW20-4D "ONE LANE ROAD AHEAD" sign, but proper sign spacing shall be maintained.
4. Sign spacing may be increased or an additional CW20-1D "ROAD WORK AHEAD" sign may be used if advance warning ahead of the flagger or R1-2 "YIELD" sign is less than 1500 feet.
5. A Shadow Vehicle with a TMA should be used anytime it can be positioned 30 to 100 feet in advance of the area of crew exposure without adversely affecting the performance or quality of the work. If workers are no longer present but road or work conditions require the traffic control to remain in place, Type 3 Barricades or other channelizing devices may be substituted for the Shadow Vehicle and TMA. 6. Additional Shadow Vehicles with TMAs may be positioned off the paved surface, next to those shown in order to protect wider work spaces.

TCP (1-2a)

7. R1-2 "YIELD" sign traffic control may be used on projects with approaches that have adequate sight distance. For projects in urban areas, work spaces should be no longer than one half city block. In rural areas on roadways with less than 2000 ADT, work spaces should be no longer than 400 feet.
8. R1-2 "YIELD" sign with R1-2aP "TO ONCOMING TRAFFIC" plaque shall be placed on a support at a 7 foot minimum mounting height.

TCP (1-2b)

9. Flaggers should use two-way radios or other methods of communication to control traffic.
10. Length of work space should be based on the ability of flaggers to communicate.
11. If the work space is located near a horizontal or vertical curve, the buffer distances should be increased in order to maintain adequate stopping sight distance to the flagger and a queue of stopped vehicles (see table above).
12. Channelizing devices on the center-line may be omitted when a pilot car is leading traffic and approved by the Engineer.
13. Flaggers should use 24" STOP/SLOW paddles to control traffic. Flags should be limited to emergency situations.

Texas Department of Transportation — Traffic Operations Division Standard

TRAFFIC CONTROL PLAN
ONE-LANE TWO-WAY
TRAFFIC CONTROL

TCP(1-2)-18

FILE: tcp1-2-18.dgn	DN:	CK:	DW:	CK:
©TXDOT December 1985	CONT	SECT	JOB	HIGHWAY
REVISIONS 4-90 4-98 / 2-94 2-12 / 1-97 2-18	DIST		COUNTY	SHEET NO.
1192				

DISCLAIMER: The use of this standard is governed by the "Texas Engineering Practice Act". No warranty of any kind is made by HAYS COUNTY for any purpose whatsoever. HAYS COUNTY assumes no responsibility for the conversion of this standard to other formats or for incorrect results or damages resulting from its use.

DATE:
FILE:

MCImetro

SITE NAME: BARRON_LAKE_STX

SITE ADDRESS:
339 FOSTER PL,
KYLE, TX 78640

DATE: 2/22/2024

SCALE: 1" = 40'

REVISIONS

DATE	DESCRIPTION	BY
02/22/24	INITIAL SUBMITTAL	AEM

EXCEPT AS MAY BE OTHERWISE PROVIDED BY CONTRACT. THESE DRAWINGS AND SPECIFICATIONS SHALL REMAIN THE PROPERTY OF MCI METRO BEING ISSUED IN STRICT CONFIDENCE AND SHALL NOT BE REPRODUCED, COPIED, OR USED FOR ANY PURPOSE WITHOUT SPECIFIC WRITTEN PERMISSION.

SAM
4801 Southwest Parkway, Building Two,
Suite 100 Austin, Texas, 78735
Ofc: 512.447.0575 email: info@sam.biz
Texas Firm Registration No. 10064300

PROJECT: 1023078031

TCP

SHEET 18 OF 18

P:\RTA\1_SAMINC_AUST\PROJECTS\1023078031\100\SURVEY\QUEBECS\REDESIGN\MCI_TO_AUS_20030225_3D_MCI_TO_RECOVER.DWG

Hays County Transportation Department

2171 Yarrington Rd, Suite 200, Kyle Texas 78640
(P) 512-393-7385 (Web) www.hayscountytx.com

UTILITY PERMIT APPROVAL LETTER

** Notification must be given **IN WRITING** at least 24 hours before work begins and proper traffic control must be implemented throughout the work zone. **

The utility company or any of its representatives, engineers, contractors, or authorized agents agree to use Best Management Practices to minimize erosion and sedimentation resulting from the proposed installation AND will insure that traffic control measures complying with applicable portions of the Texas Manual of Uniform Traffic Control Devices will be installed and maintained during installation.

General Special Provisions:

1. Construction of this line will begin on or after 12/27/2023 .

Utility Company Information:

Name:
Address: TX
Phone:
Contact Name:

Engineer / Contractor Information:

Name: Housley Communications
Address: TX
Phone: 5122175140
Contact Name: Franky Johns

Hays County Information:

Utility Permit Number: TRN-2024-7677-UTL
Type of Utility Service: Telecommunications- Copper
Project Description:
Road Name(s): Hillside Terrace
Subdivision:
Commissioner Precinct:

What type of cut(s) will you be using ? ☒ Boring ☐ Trenching ☐ Overhead ☐ N/A

Authorization by Hays County Transportation Department
The above-mentioned permit was approved in Hays County Commissioners Court on .

03/21/2024

Signature | Title | Date

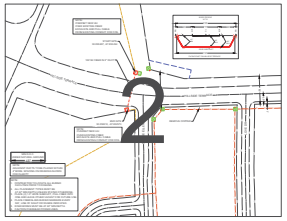

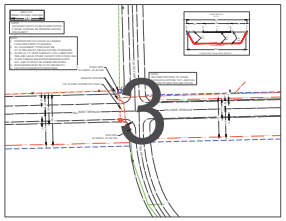

EXISTING UTILITIES SHOWN FOR REFERENCE ONLY

CONSTRUCTION CONTRACTOR TO LOCATE ALL BURIED FACILITIES PRIOR TO CONSTRUCTION

FRONTIER

5340169

HAYS COUNTY

PROJECT NUMBER: 5340169		C.O. AREA: BUDA EXCH. CODE: BUDATXXA	
DRAWN DATE: 11/20/2023	ENGR: SQUAN PHONE: 501-932-0800	CNTY: HAYS FILE:	
SCALE:	TAX DISTRICT: --	DWG 1 OF 3	
TWNSHP: --	RNG: --	SEC: --	

1

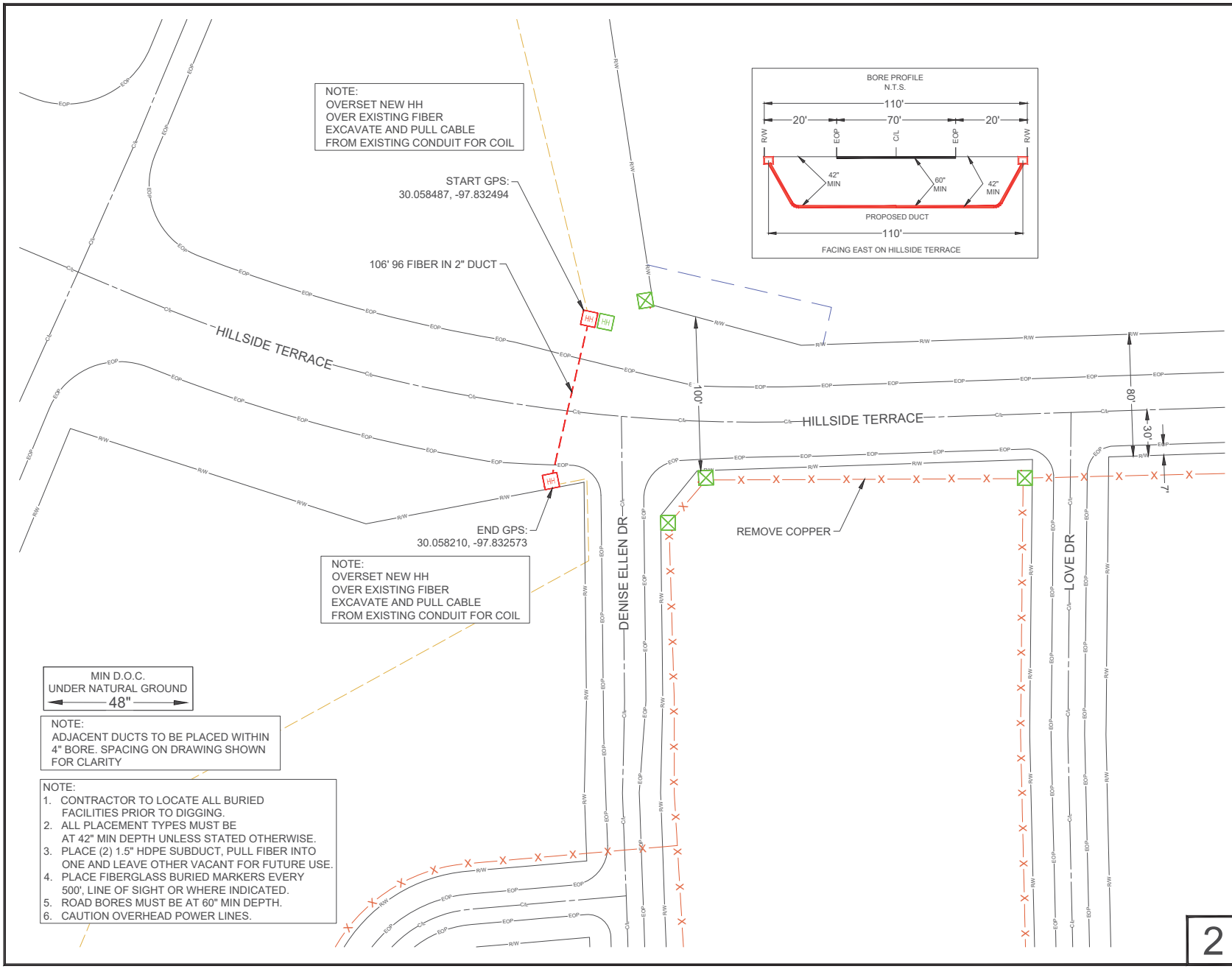

LEGEND

- PROPOSED BURIED FIBER/ COPPER/ DUCT
- PROPOSED AERIAL FIBER
- EXISTING FRONTIER UTILITIES
- RIGHT-OF-WAY LINE
- EDGE OF PAVEMENT
- EDGE OF GRAVEL
- ROAD CENTERLINE
- SIDE WALKS
- EXISTING BURIED FIBER
- EXISTING BURIED COPPER
- EXISTING AERIAL FIBER
- EXISTING AERIAL COPPER
- PROPOSED ROW
- CABLE TO BE REMOVED
- P.U.E.
- RAIL ROAD
- EX-MAN HOLE
- EX-HANDHOLE
- EX PED
- FLOWER POT
- 17"X30"-HANDHOLE
- 3'X3'-HANDHOLE
- 2'X3'-HANDHOLE
- BORE PIT
- EX HANDHOLE TO BE REMOVED
- EX PED TO BE REMOVED
- POWER POLE
- FRONTIER POLE

COILS: 100' 50'

AERIAL SPAN: 2'

0 50' 100'

EXISTING UTILITIES SHOWN FOR REFERENCE ONLY

CONSTRUCTION CONTRACTOR TO LOCATE ALL BURIED FACILITIES PRIOR TO CONSTRUCTION

FRONTIER

5340169

HAYS COUNTY

PROJECT NUMBER: 5340169		C.O. AREA: BUDA	EXCH. CODE: BUDATXXA
DRAWN DATE: 11/20/2023	ENGR: SQUAN PHONE: 501-932-0800	CNTY: HAYS	FILE:
SCALE: 1:60	TAX DISTRICT: —	DWG 2 OF 3	
TWNSHP: —	RNG: —	SEC: —	

2

MIN D.O.C.
UNDER NATURAL GROUND
48"

NOTE:
ADJACENT DUCTS TO BE PLACED WITHIN 4" BORE. SPACING ON DRAWING SHOWN FOR CLARITY

NOTE:
1. CONTRACTOR TO LOCATE ALL BURIED FACILITIES PRIOR TO DIGGING.
2. ALL PLACEMENT TYPES MUST BE AT 42" MIN DEPTH UNLESS STATED OTHERWISE.
3. PLACE (2) 1.5" HDPE SUBDUCT, PULL FIBER INTO ONE AND LEAVE OTHER VACANT FOR FUTURE USE.
4. PLACE FIBERGLASS BURIED MARKERS EVERY 500', LINE OF SIGHT OR WHERE INDICATED.
5. ROAD BORES MUST BE AT 60" MIN DEPTH.
6. CAUTION OVERHEAD POWER LINES.

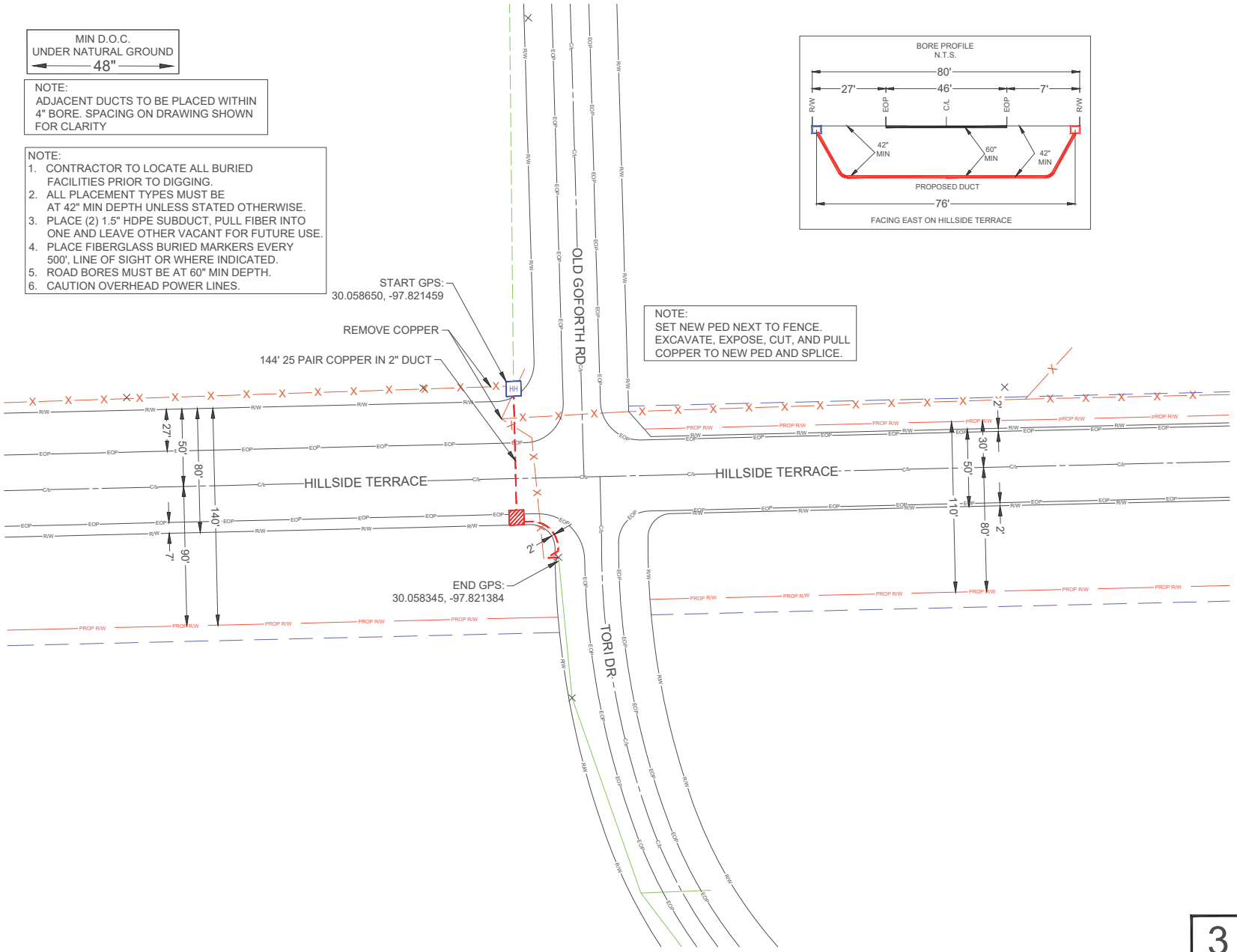

NOTE:
SET NEW PED NEXT TO FENCE. EXCAVATE, EXPOSE, CUT, AND PULL COPPER TO NEW PED AND SPLICE.

LEGEND

- PROPOSED BURIED FIBER/ COPPER/ DUCT
- PROPOSED AERIAL FIBER
- EXISTING FRONTIER UTILITIES
- RIGHT-OF-WAY LINE
- EDGE OF PAVEMENT
- EDGE OF GRAVEL
- ROAD CENTERLINE
- SIDE WALKS
- EXISTING BURIED FIBER
- EXISTING BURIED COPPER
- EXISTING AERIAL FIBER
- EXISTING AERIAL COPPER
- PROPOSED ROW
- CABLE TO BE REMOVED
- P.U.E.
- RAIL ROAD
- MH EX-MAN HOLE
- HH EX-HANDHOLE
- EX PED
- FP FLOWER POT
- H2 17"X30"-HANDHOLE
- H3 3'X3'-HANDHOLE
- H4 2'X3'-HANDHOLE
- BORE PIT
- HH EX HANDHOLE TO BE REMOVED
- EX PED TO BE REMOVED
- POWER POLE
- FRONTIER POLE

COILS: 100' 50'
AERIAL SPAN: 2'

0 50' 100'

EXISTING UTILITIES SHOWN FOR REFERENCE ONLY

CONSTRUCTION CONTRACTOR TO LOCATE ALL BURIED FACILITIES PRIOR TO CONSTRUCTION

FRONTIER

5340169
HAYS COUNTY

PROJECT NUMBER: 5340169		C.O. AREA: BUDA EXCH. CODE: BUDATXXA	
DRAWN DATE: 11/20/2023	ENGR: SQUAN PHONE: 501-932-0800	CNTY: HAYS FILE:	
SCALE: 1:60	TAX DISTRICT: —	DWG 3 OF 3	
TWNSHP: —	RNG: —	SEC: —	

3

Hays County Transportation Department

2171 Yarrington Rd, Suite 200, Kyle Texas 78640
(P) 512-393-7385 (Web) www.hayscountytx.com

UTILITY PERMIT APPROVAL LETTER

** Notification must be given **IN WRITING** at least 24 hours before work begins and proper traffic control must be implemented throughout the work zone. **

The utility company or any of its representatives, engineers, contractors, or authorized agents agree to use Best Management Practices to minimize erosion and sedimentation resulting from the proposed installation AND will insure that traffic control measures complying with applicable portions of the Texas Manual of Uniform Traffic Control Devices will be installed and maintained during installation.

General Special Provisions:

1. Construction of this line will begin on or after .

Utility Company Information:

Name:
Address:
Phone:
Contact Name:

Engineer / Contractor Information:

Name: Goforth SUD
Address: 8900 Niederwald Strasse Kyle TX 78640
Phone: 5126444640
Contact Name: Mario Tobias

Hays County Information:

Utility Permit Number: TRN-2024-7416
Type of Utility Service:
Project Description:
Road Name(s):
Subdivision:
Commissioner Precinct:

What type of cut(s) will you be using ? ☐ Boring ☐ Trenching ☐ Overhead ☐ N/A

Authorization by Hays County Transportation Department
The above-mentioned permit was approved in Hays County Commissioners Court on .

03/21/2024

Signature | Title | Date

EAR CAPITAL IMPROVEMENT MAP

GOFORTH S.U.D.

AGENDA ITEM REQUEST FORM: G. 29.

Hays County Commissioners Court

Date: 03/26/2024

Requested By: Jerry Borcherding

Sponsor: Judge Becerra

Agenda Item:

Approve renewal of RFP 2020-P15 Traffic Counter Inspection and Maintenance with JM Engineering, LLC for two (2) additional years, with proposed price increases. **BECERRA/BORCHERDING**

Summary:

RFP 2020-P15 Traffic Counter Inspection and Maintenance is set to expire on March 26, 2024. JM Engineering, LLC and the Transportation Department would like to renew their contract for two (2) additional years, with the following proposed price increases. Hays County utilizes this contract to monitor, repair, and collect data from the traffic counters located throughout the County.

Increase battery amount from $427.39 to $548.88, 28.42% increase
Increase the hourly rate from $81.23 to $90.50, 11.4% increase

Fiscal Impact:

Amount Requested: Per bid tab
Line Item Number: 020-710-00]

Budget Office:

Source of Funds: Road & Bridge General Fund
Budget Amendment Required Y/N?: No
Comments: N/A

Purchasing Office:

Purchasing Guidelines Followed Y/N?: Yes
Comments: Request for Proposals (RFP) 2020-P15 Traffic Counter Inspection and Maintenance

Auditor's Office

G/L Account Validated Y/N?: Yes, Traffic Counters Maintenance Operating Expense
New Revenue Y/N?: N/A
Comments:

Attachments

(PE) Renewal 1

HAYS COUNTY PURCHASING OFFICE
Stephanie Hunt, Purchasing Agent
712 S. Stagecoach Trail, Ste. 1012
San Marcos, Texas 78666
512-393-2267 ● purchasing@co.hays.tx.us

February 27, 2024

JM Engineering, LLC
1314 Hillridge Drive
Round Rock, TX 78665

RE: Annual contract renewal

The annual contract for RFP 2020-P15 Traffic Counter Inspection and Maintenance, is scheduled to expire on March 25, 2024. This letter will serve as official notice that Hays County would like to exercise its first (1st) option to renew the existing contract for two (2) additional years effective March 26, 2024 – March 25, 2026, provided all other terms and conditions remain unchanged and in full force and effect as provided in the current contract, with the proposed price changes. If you are in agreement with the renewal terms, please acknowledge below and return one original to the Hays County Purchasing Office at the address listed above. Upon approval by the Hays County Commissioners Court, a fully executed copy will be returned to you for your files.

Please email purchasing@co.hays.tx.us if you wish to make modifications to the contract or have any questions. Thank you.

Sincerely,

Stephanie Hunt

Stephanie Hunt
Hays County Purchasing Agent

Jay Weinberger	JM Engineering, LLC
Signature	Company
Jay Weinberger	3-21-2024
Printed Name	Date

Approved by the Hays County Commissioners Court on: _____

Ruben Becerra
Hays County Judge

RFP 2020-P15 Traffic Counters Inspection & Maintenance

Renewal 1 - Proposed Price Changes

Schedule I - Bid Items				Current Pricing		Proposed Pricing	
Item	Description	Qty.	Unit	Unit Price	Ext. Price	Unit Price	Ext. Price
1	Solar Powered RVSD Maintenance, Inspection and Service – 10 Sites	36	Month	$ 3,324.00	$ 119,664.00	$ 3,324.00	$ 79,776.00
2	Furnish and Install Windows-Based Data Recovery PC	0	none		$ -	$ -	
3	Furnish and Install Data Recovery Software	0	none		$ -	$ -	
4	Furnish and Install Cellular Modem and Appurtenances – 8 Sites	0	none		$ -	$ -	
5	Furnish and Install Batteries for Solar Powered RVSD	25	Each	$ 427.39	$ 10,684.75	$ 548.88	$ 13,722.00

Schedule II - Out of Scope Work/Equipment		Current Pricing		Proposed Pricing	
Item	Decription	Unit	Rate	Unit	Rate
1	Professional Engineer	$ 156.40	Hour	$ 156.40	Hour
2	Field Technician	$ 81.23	Hour	$ 90.50	Hour

AGENDA ITEM REQUEST FORM: G. 30.

Hays County Commissioners Court

Date: 03/26/2024

Requested By: Tammy Crumley

Sponsor: Judge Becerra

Agenda Item:

Approve renewal of RFP 2023-P04 Countywide Electrical with CT Electric for one (1) additional year.
BECERRA/T.CRUMLEY

Summary:

RFP 2023-P04 Countywide Electrical is scheduled to expire on March 31, 2024. CT Electric and Countywide Operations would like to renew their contract for one (1) additional year as provided in the contract. These services are utilized throughout the County.

Fiscal Impact:

Amount Requested: Per bid tab
Line Item Number: Various departments .5451

Budget Office:

Source of Funds: General Fund
Budget Amendment Required Y/N?: No
Comments: N/A

Purchasing Office:

Purchasing Guidelines Followed Y/N?: Yes
Comments: Request for Proposals (RFP) 2023-P04 Countywide Electrical

Auditor's Office

G/L Account Validated Y/N?: Yes, Building Maintenance and Repair Expense
New Revenue Y/N?: N/A
Comments:

Attachments

(PE) Renewal 1
Renewal Pricing

HAYS COUNTY PURCHASING OFFICE
Stephanie Hunt, Purchasing Agent
712 S. Stagecoach Trail, Ste. 1012 • San Marcos, Texas 78666
512-393-2267 • purchasing@co.hays.tx.us

March 21, 2024

CT Electric
PO Box 1185
Lockhart, TX 78644

RE: Annual contract renewal

The annual contract for RFP 2023-P04 Countywide Electrical is scheduled to expire on March 31, 2024. This letter will serve as official notice that Hays County would like to exercise its first (1st) option to renew the existing contract for one (1) additional year effective April 1, 2024 – March 31, 2025, provided all other terms and conditions remain unchanged and in full force and effect as provided in the current contract. If you are in agreement with the renewal terms, please acknowledge by signing below, and return to the purchasing email. Upon approval by the Hays County Commissioners Court, a fully executed copy will be returned to you for your files.

Please email purchasing@co.hays.tx.us if you wish to make modifications to the contract or have any questions. Thank you.

Sincerely,

Stephanie Hunt

Stephanie Hunt
Hays County Purchasing Agent

Signature	CT Electric Company
Johnny Homann Printed Name	3/21/24 Date

Approved by the Hays County
Commissioners Court on: _____

Ruben Becerra
Hays County Judge

Service Call Classification	***Pricing / Response time***
Emergency	*Response time 30min.* *Materials = Cost plus 15%* *Master Electrician = $70 an hour* *Journey Electrician = $55 an hour* *Apprentice = $40 an hour*
Outages / Power Failures	*Response time 30min.* *Materials = Cost plus 15%* *Master Electrician = $70 an hour* *Journey Electrician = $55 an hour* *Apprentice = $40 an hour*
Urgent	*Response time 2 hours* *Materials = Cost plus 15%* *Master Electrician = $70 an hour* *Journey Electrician = $55 an hour* *Apprentice = $40 an hour*
Routine	*Response time 1 business day* *Materials = Cost plus 15%* *Master Electrician = $70 an hour* *Journey Electrician = $55 an hour* *Apprentice = $40 an hour*
Utility Services	*Response time 1 business day* *Materials = Cost plus 15%* *Master Electrician = $70 an hour* *Journey Electrician = $55 an hour* *Apprentice = $40 an hour*

AGENDA ITEM REQUEST FORM: G. 31.

Hays County Commissioners Court

Date: 03/26/2024

Requested By: Sheriff Gary Cutler

Sponsor: Commissioner Smith

Agenda Item:

Authorize the execution of rental agreements with Herc Rentals for three fuel tanks, valued at $3,814.00, for the Sheriff's Office. **SMITH/CUTLER**

Summary:

In preparation for the upcoming solar eclipse, the S.O. requests approval to rent three fuel tanks for law enforcement and, if needed, other county vehicles. With the help of the Transportation Department, the S.O. received three quotes with Herc Rentals submitting the lowest bid at $3,818.33 beginning 4/4/2024-4/11/2024. Funding for the week-long rental will be expensed from the Sheriff's Office Operating budget.
Quotes -- Herc Rentals $3,813.33, Jaguar Fueling Services $7,705.00, Sunbelt Rentals -- Diesel only, no bid.

Fiscal Impact:

Amount Requested: $3,814
Line Item Number: 001-618-00.5473

Budget Office:

Source of Funds: General Fund
Budget Amendment Required Y/N?: No
Comments: N/A

Purchasing Office:

Purchasing Guidelines Followed Y/N?: Yes
Comments: 3 quotes obtained

Auditor's Office

G/L Account Validated Y/N?: Yes, Equipment Lease Expense
New Revenue Y/N?: N/A
Comments:

Attachments

Herc Rentals #55811883 QTY2
Herc Rentals #55811933 Qty of 1
Jaguar & Sunbelt Quotes

QUOTE

** COPY ** HercRentals™

R.A. No. 55811883

BRANCH: **408**	BILL TO CUSTOMER: **2603171**	SHIPPING ADDRESS
HERC SAN ANTONIO PROSOLUTIONS 11500 N LOOP ROAD SAN ANTONIO, TX 78216 210-661-4281	**HAYS COUNTY** 712 S STAGECOACH TRL, S-1071 SAN MARCOS, TX 78666	**HAYS COUNTY JOBS** 830 JACOBS WELL RD 20290 RM150 DRIFTWOOD WIMBERLEY, TX 78676 512-738-1625

DESCRIPTION/CHARGES

EST START: 4/04/24 8:00 **EST RETURN:** 4/11/24 8:00 DROP DATE: _____

SHIPPED BY: ORDERED BY: AMAYA, JESSE DROP TIME: _____

ORDER DATE: 3/20/24 SALESPERSON: 110 SALES COORDINATOR:

RENTAL TAX CLAIM: COUNTY GOVERNM TAX DOCUMENT #: 74-6002241

PO# / JOB#: WIMBERLEY-QUOTE / 1 - HAYS COUNTY JOBS

Rates subject to availability

Herc Rentals offers peace of mind when you purchase Rental Protection Plan ("RPP") at the start of your rental. This optional program limits your responsibility when accidental damage or theft occurs on covered equipment. You will be charged the RPP fee if you choose to purchase RPP or until you provide an acceptable certificate of insurance. View the benefits, details, and exclusions to RPP by visiting our website at https://www.hercrentals.com/services/rpp-rental-protection-plan/terms-and-conditions.html or contact your Herc Rentals servicing location for more information.

Qty	Equipment #	Hrs/	Min	Hour	Day	Week	4 Week	Amount
2	FUEL TANK 552 GALLON 5301050	8/	134.00	22.33	134.00	407.00	769.00	814.00
	EMISSIONS & ENV SURCHARGE EMISSIONS							16.12
	RENTAL PROTECTION PLAN							122.10

* * * Items are priced per piece * * *

SALES ITEMS:

Qty	Item number	Unit	Price	
1	FUEL TANK INSPECTION & CLEAN 3740000001 - REVENUE	EA	275.000	275.00
1	FUEL TANK INSPECTION & CLEAN 3740000001 - REVENUE	EA	275.000	275.00
1	TRANS SRVC SURCHARGE 3710000001 - TRANS SERVICE SURCHARGE		75.000	75.00

CONTINUED

CAREFULLY READ THE TERMS AND CONDITIONS THAT APPEAR BELOW AND ON REVERSE SIDE OF THIS PAGE ("TERMS")

RENTAL PROTECTION PLAN. Customer must either show proof of Property Insurance as required in Section 8 on reverse side hereof or purchase Rental Protection Plan ("RPP"). Herc Rentals Inc. or its affiliate ("Herc") may offer RPP for a fee to Customer on certain Equipment and for certain types of loss or damage to limit Customer´s liability for property loss or damage to such Equipment for such loss or damage. RPP is not offered on all types of Equipment. NOTWITHSTANDING PAYMENT OF THE RPP FEE, RPP DOES NOT APPLY, AND CUSTOMER IS LIABLE FOR, ALL DAMAGES TO OR REPLACEMENT COST OF, THE EQUIPMENT, AS APPLICABLE, AND ANY ADMINISTRATIVE FEES AND EXPENSES OF HERC: (1) CAUSED BY THE EQUIPMENT BEING USED OR OPERATED IN VIOLATION OF ANY OF THE TERMS; (2) IN CASE OF NEGLIGENCE, AS DETERMINED IN HERC´S SOLE DISCRETION; AND/OR (3) IF COVERAGE IS EXCLUDED UNDER THE RPP TERMS AND CONDITIONS POSTED ON HERC´S WEBSITE. Upon accepting RPP, Customer agrees to pay an RPP fee. Customer must review the RPP Terms and Conditions posted on Herc´s website at https://www.hercrentals.com/services/rpp-rental-protection-plan/terms-and-conditions.html before deciding whether to accept RPP. If Herc offers RPP to Customer for certain Equipment and Customer accepts RPP and pays Herc the RPP fee, in return for the RPP fee, if at the time of the claim, RPP covers such repair or replacement, Herc agrees to waive certain claims for accidental damages to or theft of such covered Equipment occurring during normal and careful use. Customer remains liable for all other damages as set forth in the Terms. RPP IS NOT INSURANCE. TO THE EXTENT HERC DOES NOT OFFER RPP TO CUSTOMER, OR CUSTOMER DOES NOT ACCEPT RPP, CUSTOMER MUST MAINTAIN THE PROPERTY INSURANCE COVERAGE REQUIRED BY PARAGRAPH 8. **PLEASE BE AWARE THAT IF CUSTOMER DOES NOT ELECT TO TAKE RPP AND IT ELECTS TO MAINTAIN PROPERTY INSURANCE COVERAGE, AND IF THE CERTIFICATE OF INSURANCE PROVIDED TO HERC TO EVIDENCE SUCH INSURANCE COVERAGE IS UNACCEPTABLE TO HERC OR THE APPLICABLE POLICIES EXPIRE, CUSTOMER AGREES THAT HERC MAY CHARGE RPP FOR ALL APPLICABLE RENTALS UNTIL SUCH TIME AS AN ACCEPTABLE AND VALID CERTIFICATE OF INSURANCE IS PROVIDED AND SUCH MATTERS ARE CORRECTED TO HERC'S REASONABLE SATISFACTION.** NOTWITHSTANDING ANY NOTATION ON THE RENTAL RECORD, RPP IS NOT OFFERED ON OR AVAILABLE FOR THE RENTAL OF PASSENGER MOTOR VEHICLES AND CERTAIN OTHER EQUIPMENT LISTED ON HERC´S WEBSITE.

A detailed description of fees and surcharges that may be applicable to Customer´s rental can be found on Herc´s website at https://www.hercrentals.com/services-associated-charges.html Customer agrees to pay, in addition to all rental charges, all fees and charges set forth above and, the following charges as applicable: (i) based on Customer´s possession and/or use of the Equipment, all consumables, fees, licenses, present and future taxes and any other governmental charges; (ii) additional charges for more than one shift use; (iii) freight, delivery, pick up, transportation charges; (iv) transportation service surcharges; (v) repairs and replacement per this contract; (vi) cleaning charge for Equipment returned with excessive dirt, concrete and/or paint; (vii) fees for lost keys; (viii) refueling service charges; (ix) fines for use of dyed diesel fuel in on road Equipment; (x) preventative maintenance charges; (xi) emissions and environmental surcharges and fees; (xii) vehicle license fees. HERC COLLECTS THESE FEES AND CHARGES AS REVENUE AND USES THEM AT ITS DISCRETION.

THE EQUIPMENT IS RENTED BY HERC TO THE CUSTOMER PURSUANT TO THE TERMS. CUSTOMER REPRESENTS HAVING READ AND AGREED TO SAME.

PARAGRAPH 11 ON THE BACK OF THIS PAGE IS IN LIEU OF (i) ALL WARRANTIES, EXPRESS, IMPLIED OR STATUTORY, INCLUDING, BUT NOT LIMITED TO, THE IMPLIED WARRANTY OF MERCHANTABILITY AND THE IMPLIED WARRANTY OF FITNESS FOR A PARTICULAR PURPOSE; AND (ii) ALL OBLIGATIONS ON THE PART OF HERC TO CUSTOMER FOR DAMAGES.

CUSTOMER WAIVES ALL INDIRECT, INCIDENTAL, CONSEQUENTIAL OR SPECIAL DAMAGES ARISING OUT OF OR IN CONNECTION WITH THIS AGREEMENT, INCLUDING WITHOUT LIMITATION, THE RENTAL, MAINTENANCE, USE, OPERATION, STORAGE, ERECTION, DISMANTLING OR TRANSPORTATION OF THE EQUIPMENT.

Customer is obligated to return the Equipment in a good, clean, and uncontaminated condition, free of any and all hazardous substances.

Quote Valid For 30 Days From Order Date

Customer Name _____ Title _____ **Terms are due upon receipt** Not valid without Barcode

Customer Signature _____ Date _____

For **GREAT DEALS** on **USED EQUIPMENT** - visit us on-line at HercRentals.com

QUOTE

** COPY ** HercRentals™

R.A. No. 55811883

BRANCH: **408**	BILL TO CUSTOMER: **2603171**	SHIPPING ADDRESS
HERC SAN ANTONIO PROSOLUTIONS 11500 N LOOP ROAD SAN ANTONIO, TX 78216 210-661-4281	**HAYS COUNTY** 712 S STAGECOACH TRL, S-1071 SAN MARCOS, TX 78666	**HAYS COUNTY JOBS** 830 JACOBS WELL RD 20290 RM150 DRIFTWOOD WIMBERLEY, TX 78676 512-738-1625

DESCRIPTION/CHARGES

EST START: 4/04/24 8:00 **EST RETURN:** 4/11/24 8:00 DROP DATE: _____

SHIPPED BY: ORDERED BY: AMAYA, JESSE DROP TIME: _____

ORDER DATE: 3/20/24 SALESPERSON: 110 SALES COORDINATOR:

RENTAL TAX CLAIM: COUNTY GOVERNM TAX DOCUMENT #: 74-6002241

PO# / JOB#: WIMBERLEY-QUOTE / 1 - HAYS COUNTY JOBS

Rates subject to availability

Qty	Equipment #	Hrs/	Min	Hour	Day	Week	4 Week	Amount

SALES ITEMS:

Qty	Item number	Unit	Price	
1	TRANS SRVC SURCHARGE		75.000	75.00
	3710000001 - TRANS SERVICE SURCHARGE			
	DELIVERY CHARGE			375.00
	PICKUP CHARGE			375.00
			Sub-total:	2280.12
			Rental Protection Plan:	122.10
	Taxable Sub-total: 0.00			
			Total:	2402.22

CAREFULLY READ THE TERMS AND CONDITIONS THAT APPEAR BELOW AND ON REVERSE SIDE OF THIS PAGE ("TERMS")

RENTAL PROTECTION PLAN. Customer must either show proof of Property Insurance as required in Section 8 on reverse side hereof or purchase Rental Protection Plan ("RPP"). Herc Rentals Inc. or its affiliate ("Herc") may offer RPP for a fee to Customer on certain Equipment and for certain types of loss or damage to limit Customer´s liability for property loss or damage to such Equipment for such loss or damage. RPP is not offered on all types of Equipment. NOTWITHSTANDING PAYMENT OF THE RPP FEE, RPP DOES NOT APPLY, AND CUSTOMER IS LIABLE FOR, ALL DAMAGES TO OR REPLACEMENT COST OF, THE EQUIPMENT, AS APPLICABLE, AND ANY ADMINISTRATIVE FEES AND EXPENSES OF HERC: (1) CAUSED BY THE EQUIPMENT BEING USED OR OPERATED IN VIOLATION OF ANY OF THE TERMS; (2) IN CASE OF NEGLIGENCE, AS DETERMINED IN HERC´S SOLE DISCRETION; AND/OR (3) IF COVERAGE IS EXCLUDED UNDER THE RPP TERMS AND CONDITIONS POSTED ON HERC´S WEBSITE. Upon accepting RPP, Customer agrees to pay an RPP fee. Customer must review the RPP Terms and Conditions posted on Herc´s website at https://www.hercrentals.com/services/rpp-rental-protection-plan/terms-and-conditions.html before deciding whether to accept RPP. If Herc offers RPP to Customer for certain Equipment and Customer accepts RPP and pays Herc the RPP fee, in return for the RPP fee, if at the time of the claim, RPP covers such repair or replacement, Herc agrees to waive certain claims for accidental damages to or theft of such covered Equipment occurring during normal and careful use. Customer remains liable for all other damages as set forth in the Terms. RPP IS NOT INSURANCE. TO THE EXTENT HERC DOES NOT OFFER RPP TO CUSTOMER, OR CUSTOMER DOES NOT ACCEPT RPP, CUSTOMER MUST MAINTAIN THE PROPERTY INSURANCE COVERAGE REQUIRED BY PARAGRAPH 8. **PLEASE BE AWARE THAT IF CUSTOMER DOES NOT ELECT TO TAKE RPP AND IT ELECTS TO MAINTAIN PROPERTY INSURANCE COVERAGE, AND IF THE CERTIFICATE OF INSURANCE PROVIDED TO HERC TO EVIDENCE SUCH INSURANCE COVERAGE IS UNACCEPTABLE TO HERC OR THE APPLICABLE POLICIES EXPIRE, CUSTOMER AGREES THAT HERC MAY CHARGE RPP FOR ALL APPLICABLE RENTALS UNTIL SUCH TIME AS AN ACCEPTABLE AND VALID CERTIFICATE OF INSURANCE IS PROVIDED AND SUCH MATTERS ARE CORRECTED TO HERC'S REASONABLE SATISFACTION.** NOTWITHSTANDING ANY NOTATION ON THE RENTAL RECORD, RPP IS NOT OFFERED ON OR AVAILABLE FOR THE RENTAL OF PASSENGER MOTOR VEHICLES AND CERTAIN OTHER EQUIPMENT LISTED ON HERC´S WEBSITE.

A detailed description of fees and surcharges that may be applicable to Customer´s rental can be found on Herc´s website at https://www.hercrentals.com/services-associated-charges.html Customer agrees to pay, in addition to all rental charges, all fees and charges set forth above and, the following charges as applicable: (i) based on Customer´s possession and/or use of the Equipment, all consumables, fees, licenses, present and future taxes and any other governmental charges; (ii) additional charges for more than one shift use; (iii) freight, delivery, pick up, transportation charges; (iv) transportation service surcharges; (v) repairs and replacement per this contract; (vi) cleaning charge for Equipment returned with excessive dirt, concrete and/or paint; (vii) fees for lost keys; (viii) refueling service charges; (ix) fines for use of dyed diesel fuel in on road Equipment; (x) preventative maintenance charges; (xi) emissions and environmental surcharges and fees; (xii) vehicle license fees. HERC COLLECTS THESE FEES AND CHARGES AS REVENUE AND USES THEM AT ITS DISCRETION.

THE EQUIPMENT IS RENTED BY HERC TO THE CUSTOMER PURSUANT TO THE TERMS. CUSTOMER REPRESENTS HAVING READ AND AGREED TO SAME.

PARAGRAPH 11 ON THE BACK OF THIS PAGE IS IN LIEU OF (i) ALL WARRANTIES, EXPRESS, IMPLIED OR STATUTORY, INCLUDING, BUT NOT LIMITED TO, THE IMPLIED WARRANTY OF MERCHANTABILITY AND THE IMPLIED WARRANTY OF FITNESS FOR A PARTICULAR PURPOSE; AND (ii) ALL OBLIGATIONS ON THE PART OF HERC TO CUSTOMER FOR DAMAGES.

CUSTOMER WAIVES ALL INDIRECT, INCIDENTAL, CONSEQUENTIAL OR SPECIAL DAMAGES ARISING OUT OF OR IN CONNECTION WITH THIS AGREEMENT, INCLUDING WITHOUT LIMITATION, THE RENTAL, MAINTENANCE, USE, OPERATION, STORAGE, ERECTION, DISMANTLING OR TRANSPORTATION OF THE EQUIPMENT.

Customer is obligated to return the Equipment in a good, clean, and uncontaminated condition, free of any and all hazardous substances.

Quote Valid For 30 Days From Order Date

Customer Name _____ Title _____ **Terms are due upon receipt** Not valid without Barcode

Customer Signature _____ Date _____

For **GREAT DEALS** on **USED EQUIPMENT** - visit us on-line at HercRentals.com

RESERVATION AND RENTAL CONTRACT - HERC RENTALS INC. AND AFFILIATES ("HERC")

This Agreement ("Agreement") is for the rental of the vehicles and equipment and related services described on the other side of this page ("Front"), including all parts of and attachments and accessories to such equipment ("Equipment"). This Agreement is between the customer identified on the Front ("Customer") and Herc. Both parties acknowledge that this Agreement consists of the terms written or printed on this page and the Front.

1. NATURE OF THIS AGREEMENT. This Agreement is solely for the purpose of creating a rental transaction, which allows Customer to use the Equipment as permitted by this Agreement. CUSTOMER REPRESENTS THAT THE EQUIPMENT IS TO BE USED SOLELY AND EXCLUSIVELY FOR BUSINESS OR COMMERCIAL PURPOSES. The Equipment is owned by Herc. Customer acknowledges that no one other than Herc may transfer or assign the Equipment or any rights or obligations under this Agreement. Neither Customer nor any Authorized Operators (as defined below) are agents of Herc. No one may repair or alter the Equipment without Herc´s prior written approval. Customer will not suffer any liens or encumbrances to attach to the Equipment and will defend, indemnify, and hold Herc harmless from all loss, liability, and expense by reason thereof.

2. WHO MAY OPERATE THE EQUIPMENT. Only Customer and the following persons with Customer´s express permission, subject to the requirements of this Section, ("Authorized Operators") may operate the Equipment: Customer´s employer, employees, and fellow employees operating the Equipment in the course and scope of such employee´s regular employment, and persons approved by Herc in writing. Customer and all Authorized Operators must: only use the Equipment in the course and scope of Customer´s or Customer´s employer´s regular business operations, hold a valid driver´s license to operate a motor vehicle, be of legal age to operate the Equipment, be properly qualified and trained to operate the Equipment; and have a valid operator´s license with respect to the Equipment where required by law. Customer is solely responsible for determining that the Authorized Operators have met the requirements of this Section and are properly qualified and trained to use the Equipment prior to operating the Equipment. Customer is solely responsible for limiting the use of the Equipment to Authorized Operators meeting the requirements of this Section and for the acts and omissions of any person that operates, uses, stores or moves the Equipment regardless of whether that person is an Authorized Operator.

3. RENTAL FEES AND OTHER CHARGES. Customer will pay Herc on demand to the address and by the date specified in the applicable invoice, all charges, including without limitation, rental, time, mileage, service, transportation, refueling service, surcharges, sales and use taxes, and tax reimbursements imposed with respect to the Equipment and this Agreement, and all expenses, including reasonable attorney´s fees and costs incurred in collecting same, all in accordance with this Agreement. A detailed description of all fees and surcharges that may be applicable to Customer´s rental can be found on Herc´s website at https://www.hercrentals.com/services-associated-charges.html . Customer must notify Herc in writing of any disputed charge within 30 days of receipt of such invoice or Customer shall be deemed to have irrevocably waived such disputed charge. The basic daily, weekly and 4-week rental rates will entitle Customer to a maximum of one-shift use (i.e., a maximum of 8 hours per day; 40 hours per week; 160 hours per 4 weeks). Use in excess of one shift will be payable at the hourly rate of 1/8 of the daily charge (for a daily rental), 1/40 of the weekly charge (for a weekly rental) and 1/160 of the 4-week charge (for a 4-week rental), plus applicable taxes. All charges are subject to final audit by Herc. Herc will have a lien as allowed by law for charges incurred hereunder upon the premises and improvements upon which the Equipment is employed. Rentals are F.O.B. the Herc Branch unless otherwise specified. Shipping charges from such Branch to the Customer´s destination and return and all loading, unloading, assembling and dismantling will be paid by Customer. All rates for rentals in excess of 4 weeks are subject to change on 30 days' written notice to the Customer with respect to any portion of the rental period then remaining. Charges not paid on time, as required by this Agreement, may be subject to a late payment fee as provided in this Agreement. Customer may also be charged a reasonable fee for any check used for payment hereunder that is returned unpaid. Customer agrees in the event of a default, that any deposit made by Customer shall be used by Herc for unpaid rent and other charges, damages and costs incurred due to the default.

4. CUSTOMER´S RESPONSIBILITIES. Customer is responsible to Herc for all loss or damage to the Equipment, and for its return in the same condition it was received, except for ordinary wear, and free of any hazardous materials and/or contaminants. Such responsibility is limited to the full value of the Equipment at the time it is lost or damaged, less its salvage value, plus any administrative fees and Herc´s related expenses, such as loss of use, appraisal fees or recovery costs ("Full Value"). The Equipment must be returned to Herc at the renting Herc Branch by the Estimated Return Date (EST RETURN) specified on the Front, or sooner if demanded by Herc. Customer must notify Herc if it desires to change the EST RETURN for all or some of the Equipment. Customer acknowledges that it must confirm return receipt of the Equipment by Herc at the expiration or earlier termination of the rental. Until such time as Herc receives actual possession of the Equipment, Customer agrees to hold said Equipment in a safe and secure manner. The Equipment will be used and kept only at Customer´s place of business or the job site at which the Equipment is used and will not be moved without the prior written consent of Herc. The Equipment will be used only in accordance with the manufacturer´s instructions within its rated capacity. Customer will perform or cause to be performed and pay for all normal periodic and other basic service, adjustments and lubrication of the Equipment, including but not limited to: checking of the Equipment before each shift; checking and maintaining crankcase, transmission, cooling and fluid systems daily; and checking tire pressures and battery fluid and charge levels weekly. If the Equipment fails to operate properly or becomes in need of repair, Customer will immediately cease using same and will immediately notify Herc. Customer is solely responsible for providing a secure and safe work environment for all parties, including Herc and its employees, and for ensuring that the possession, storage, use and operation of the Equipment is carried out in compliance with applicable laws and industry standards, (including but not limited to those relating to worker safety and the environment). Customer is solely responsible for supervising the use and operation of the Equipment to ensure it is used in accordance with manufacturer instructions for proper operation and safety, for ensuring that the Equipment is proper for Customer's intended use and environment, and for ensuring users of the Equipment are qualified, trained, and familiar with the Equipment.

5. RISK OF LOSS. All loss of or damage to the Equipment from any cause whatsoever while on rental and whether or not due to the fault of Customer, including, but not limited to, fire, flood, theft, comprehensive losses, collision and rollover, and Acts of God, will be the sole responsibility of Customer and will be paid to Herc promptly upon Customer´s receipt of an invoice therefor. Such responsibility is limited to the Full Value of the Equipment at the time it is lost or damaged. THE COST OF LABOR FOR REPAIRS WILL BE EITHER HERC´S THEN PREVAILING HOURLY RATE FOR LABOR, POSTED AT THE HERC BRANCH WHERE THE EQUIPMENT IS TO BE REPAIRED, OR THE REPAIRER´S HOURLY RATE FOR LABOR CHARGED TO HERC FOR REPAIRS AS THE CASE MAY BE. PARTS WILL BE CHARGED AT HERC´S COST PLUS A RETAIL MARKUP. Use of the Equipment by persons other than Customer or Authorized Operators will be at Customer´s sole risk.

6. EVENTS OF DEFAULT. Customer shall be in default of this Agreement if Customer fails to pay any amount when due hereunder, or if Customer breaches any of the other terms of this Agreement, or if Customer becomes insolvent or ceases to do business as a going concern, or if a petition in bankruptcy is filed by or against Customer, or if Customer is in default pursuant to the provisions of any other agreement by and between Customer and Herc. Customer will further be deemed to be in default if the Equipment is obtained from Herc through fraud or misrepresentation or is stored or used: (A) in violation of any law or ordinance including without limitation, any local, state or federal law or regulation involving "Hazardous Materials," including "DOT Hazardous Materials," as set forth in 49 C.F.R. 171-180; (B) in a reckless, negligent or abusive manner, or is damaged while being rented by Customer; (C) in violation of Paragraph 4 above, (D) in any fashion or manner for which the Equipment was not designed or beyond the manufacturer´s rated capacity for the Equipment.

7. REMEDIES OF HERC. In case of default by Customer, or if Herc deems itself insecure, Herc may, but is not required to, peaceably enter the premises where the Equipment is located and render it inoperative or remove same with or without process of law and without any notice to Customer or liability. Customer hereby waives any right to any hearing or to receive any notice of legal process, as a pre-condition for Herc recovering the Equipment. Customer agrees to permit such entry and action by Herc. In such case Herc may also terminate this Agreement without notice to Customer or prejudice to any remedies or claims which Herc might otherwise have for any amount due hereunder, expense of retaking, court costs and reasonable attorneys' fees. Customer will remain liable for the Equipment or for any loss or injury to the Equipment, any property and/or persons, notwithstanding such termination. Herc shall have the right to issue and circulate theft notices, cause warrants to be issued and take any other steps which Herc may reasonably deem necessary to recover the Equipment, if the Equipment is not returned on the date specified on the Front or sooner as permitted by the terms of this Agreement. The remedies provided herein in favor of Herc are not exclusive but shall be cumulative and in addition to all other remedies existing at law or in equity, any one or more of which may be exercised simultaneously or successively.

8. INSURANCE. Liability Insurance for Injury/Damage to Third Parties - Customer agrees to maintain and carry, at its own expense and at all times during the term of this Agreement, the following insurance: (1) commercial automobile insurance, with at least a per occurrence limit of $1 million, which includes coverage for owned and non-owned motor vehicles. Herc shall be named as an additional insured for all claims arising out of the maintenance, operation, or use of the vehicle. All insurance, whether issued on a primary or umbrella/excess basis, afforded to Herc hereby shall be primary to, and non-contributory with, any other insurance on which Herc is a named insured, whether such other insurance is primary, excess, self-insurance, or insurance on any other basis, to the furthest extent permitted by law. Where, by operation of law, Herc is required to provide primary coverage, such primary and non-contributory protection shall not exceed the minimum limits required by the automobile financial responsibility laws of the applicable state. Such protection will conform to the basic requirements of the applicable No-Fault law, BUT DOES NOT INCLUDE UNINSURED/UNDERINSURED MOTORIST, SUPPLEMENTARY NO FAULT OR ANY OTHER OPTIONAL COVERAGE. TO THE EXTENT PERMITTED BY LAW, HERC AND CUSTOMER REJECT THE INCLUSION OF ANY SUCH COVERAGE. If such coverage is imposed by operation of law, then the limits of such coverage will be the minimum required by the law of the applicable state; (2) commercial general liability insurance (providing coverage equal to or greater than the standard ISO CG 00 01 12 04 form), including contractual liability coverage covering Customer's indemnity obligations of Section 9, with limits of insurance not less than $1 million per occurrence and $2 million in the aggregate. Customer shall name Herc as an additional insured for all claims and liability arising out of the maintenance, operation, or use by the Customer of equipment leased to Customer by Herc (providing coverage equal or greater than the standard ISO CG 20 28 11 85). Such insurance shall be primary and non-contributory to any other insurance maintained by Herc. Customer further agrees that the amount of insurance available to Herc shall be for the full amount of the loss up to policy limits of liability and shall not be limited to the minimum requirements of this agreement. In the event any policy provided in compliance with this agreement states that the insurance afforded to an additional insured will not be broader than that required by contract, or words of similar meaning, Customer agrees that nothing in this agreement is intended to restrict or limit the breadth of such insurance; and (3) property insurance for the full replacement cost of the Equipment, including coverage for all risks of loss or damage to the Equipment. The policy must expressly cover owned and non-owned Equipment, including motor vehicles (if applicable), while in your care, custody and control. Customer shall carry workers compensation and employers´ liability insurance with at least a per occurrence limit of $1 million. Customer shall name Herc as an additional insured for all claims arising out of the maintenance, operation or use of the equipment, and as an additional loss payee. Any deductibles or self-insured retentions shall be the sole responsibility of the Customer. All insurance required by this Rental Agreement shall include a waiver of rights of recovery against Herc or its insurers by the Customer and its insurers, as well as a waiver of subrogation against Herc or its insurers. The policies required hereunder shall provide that Herc must receive not less than 30 days' notice prior to any cancellation. **Customer shall provide Herc with documented proof of all required insurance coverage, including copies of all applicable additional insured endorsements.** FOR RENTAL OF EQUIPMENT NOT LICENSED FOR ROAD USE, CUSTOMER MUST EITHER (i) ELECT TO NAME HERC AS LOSS PAYEE EVIDENCING PROPERTY INSURANCE COVERAGE, OR (ii) ELECT TO PURCHASE THE RENTAL PROTECTION PLAN. Nothing contained in this insurance Section shall limit or modify the obligations set forth in Section 9.

9. INDEMNIFICATION. TO THE FULLEST EXTENT PERMITTED BY LAW, AND FOR AND IN ADDITIONAL CONSIDERATION OF PROVIDING THE EQUIPMENT HEREIN, CUSTOMER WILL DEFEND, INDEMNIFY AND HOLD HARMLESS HERC, ITS PARENT COMPANY, THEIR AFFILIATES, AND THEIR RESPECTIVE DIRECTORS, OFFICERS, AGENTS AND EMPLOYEES (COLLECTIVELY "HERC INDEMNIFIED PARTIES"), FROM AND AGAINST ANY AND ALL ACTUAL, ALLEGED, POTENTIAL OR PERCEIVED RISKS OF INJURY, DEMANDS, CLAIMS, SUITS, LIABILITIES, LOSSES, SETTLEMENTS, JUDGMENTS, DAMAGES (INCLUDING BUT NOT LIMITED TO COSTS, EXPENSES, DELAYS, DEDUCTIBLE AMOUNTS OF INSURANCE, THE COSTS OF ENFORCING ANY RIGHT TO INDEMNIFICATION UNDER THIS AGREEMENT, THE COST OF PURSUING ANY INSURANCE PROVIDERS, AND LIQUIDATED, CONSEQUENTIAL AND PUNITIVE DAMAGES), ENVIRONMENTAL SPILLS, ATTORNEYS' FEES AND DISPUTE RESOLUTION COSTS, WHETHER OR NOT SUCH LOSSES, LIABILITIES, CLAIMS OR DAMAGES ARE BASED, IN WHOLE OR IN PART UPON ANY OF THE HERC INDEMNIFIED PARTIES´ ALLEGED NEGLIGENCE OR PARTICIPATION IN THE WRONG OR UPON ANY ALLEGED BREACH OF A STATUTORY OR REGULATORY DUTY OR OBLIGATION ON THEIR PART, ARISEN OUT OF OR ALLEGED TO HAVE ARISING OUT OF ANY ACT OR OMISSION IN CONNECTION WITH THE CUSTOMER´S MAINTENANCE, USE, POSSESSION, OPERATION, ERECTION, DISMANTLING, SERVICING OR TRANSPORTATION OF THE EQUIPMENT OR MOTOR VEHICLE OR CUSTOMER´S FAILURE TO COMPLY WITH THE TERMS OF THIS AGREEMENT,BY REASON OF BODILY INJURY, INCLUDING DEATH, AND PROPERTY DAMAGE, SUSTAINED BY ANY PERSON OR PERSONS, INCLUDING BUT NOT LIMITED TO EMPLOYEES OF CUSTOMER. CUSTOMER WILL, AT ITS SOLE EXPENSE, COMPLY WITH ALL FEDERAL, STATE AND LOCAL LAWS AND REGULATIONS AFFECTING THE EQUIPMENT AND ITS USE, OPERATION, ERECTION, DESIGN AND TRANSPORTATION, INCLUDING WITHOUT LIMITATION, LICENSING AND BUILDING CODE REQUIREMENTS, AND WILL DEFEND, INDEMNIFY AND HOLD HERC INDEMNIFIED PARTIES HARMLESS FROM ALL LOSS, LIABILITY OR EXPENSE RESULTING FROM ACTUAL OR ALLEGED VIOLATIONS OF ANY SUCH LAWS, REGULATIONS OR REQUIREMENTS. The foregoing indemnification provisions will not reduce or affect the other rights or obligations which would otherwise exist in favor of the Herc Indemnified Parties. Any insurance requirements set forth in this Agreement or any Agreement will not limit foregoing indemnification.

10. NOTICE OF LOSS OR ACCIDENT. In the event of an accident, loss of, theft of, or damage to, spill or leak of hazardous materials from, the Equipment, Customer agrees to notify Herc as soon as possible by telephone and, thereafter, to immediately report in writing to Herc and to the public authorities (where required by law or by Herc) all necessary information relating to the loss or accident.

11. CONDITION OF THE EQUIPMENT. Customer acknowledges having examined the Equipment upon its delivery to Customer. The Equipment shall be deemed to be accepted by Customer upon delivery and subject to the terms and conditions of this Agreement. Customer shall notify Herc in writing within 24 hours of delivery of the Equipment of any problem with the Equipment. If the Equipment is found by Customer not to be in good mechanical condition, as a result of conditions not the responsibility of Customer, nor caused by the fault or negligence of Customer or Customer´s employees or agents, Customer will so notify Herc, whereupon Herc will then, at its option and without any other liability or responsibility by Herc to Customer: (a) repair or suitably replace the Equipment within a reasonable time during Herc´s normal working hours, with the commencement or running of the terms of this Agreement to be tolled for the period the Equipment is "down"; or (b) remove the Equipment and terminate this Agreement and refund payments of rental charges, if any, for the unexpired term of the Agreement, less whatever is due Herc for damage to or maintenance of Equipment which is the responsibility of Customer. Customer agrees to provide full access to the Equipment to Herc´s representatives to enable Herc to meet its responsibilities hereunder.

12. LATE PAYMENT FEE. Should Customer fail to pay any invoice to Herc in accordance with the terms of such invoice, Customer will pay a late payment fee to Herc on such delinquent payment until fully paid, at an amount up to the maximum rate allowed by the laws of the jurisdiction in which the Herc location specified on the Front is located.

13. FUELING SERVICE CHARGE. Herc agrees to provide the Equipment to Customer with full fuel tanks. Customer agrees to return the Equipment with full fuel tank(s). If Customer returns the Equipment with the fuel tank(s) less than full, Customer will pay to Herc a sum equal to Herc´s then applicable refueling service charge posted at Herc´s location where the Equipment is returned for the number of gallons required to refill the tank(s) at the time of return.

14. MERGER/MODIFICATION/SEVERABILITY. This Agreement expresses the entire agreement between the parties with respect to the subject matter hereof. No modification or alteration of the terms hereof will be effective as against Herc unless same is in writing and signed by a duly authorized officer of Herc. Customer's use and/or delivery of the Equipment and/or Customer's signing of this Agreement shall be deemed execution of this Agreement and shall constitute Customer's acceptance of all of the Terms contained on the Front hereof and herein, and the exclusion of any terms and conditions otherwise stated by Customer or contained in any of Customer's documents. The paragraph headings contained in this Agreement are for convenience only and will not be used to expand or limit the actual terms and conditions hereof. Customer and the person signing this Agreement represent that: (a) they both have full authority to execute, deliver and perform this Agreement; and (b) this Agreement is a legal, valid and binding obligation of Customer, enforceable in accordance with its terms.

15. GOVERNING LAW/JURISDICTION/JURY TRIAL WAIVER/LIMITATION OF LIABILITY. This Agreement shall be governed by and construed in accordance with the laws of the state of Delaware without regard to its rules of conflict of laws. Customer irrevocably and unconditionally consents to submit to the jurisdiction of the state and federal courts within the State of Delaware (the "Delaware Courts") or Florida ("Florida Courts") for any litigation arising out of or relating to this Agreement and the transactions contemplated hereby, and waives any objection to the laying of venue and forum in the Delaware Courts and/or the Florida Courts. If any provision, or any part of any provision of this Agreement or the application thereof is thereafter held invalid or unenforceable, the remainder of this Agreement shall not be affected thereby and to this end the provisions of this Agreement are declared severable. Each party hereby waives and releases all right to trial by jury in any action, proceeding or counterclaim brought by either party hereto against the other (and/or against its officers, directors, employees, agents, or subsidiary or affiliated entities) on any matters whatsoever arising out of or in any way connected with this Agreement. THE MAXIMUM LIABILITY OF HERC, ITS OFFICERS, DIRECTORS, EMPLOYEES, AGENTS OR AFFILIATES UNDER THIS AGREEMENT (REGARDLESS OF WHETHER A CLAIM IS BASED UPON WARRANTY, CONTRACT, TORT, NEGLIGENCE OR OTHERWISE) SHALL NOT EXCEED THE AMOUNT PAID TO HERC BY CUSTOMER UNDER THIS AGREEMENT.

16. ELECTRONIC SIGNATURES. Customer agrees that this Agreement may be signed manually or by scanning and sending .pdf or other copies thereof via email or via any other electronic means and in one or more counterparts, each of which shall be (i) an original, and all of which taken together shall constitute one and the same agreement; (ii) a valid and binding agreement and fully admissible under state and federal rules of evidence; and (iii) enforceable under the applicable Uniform Commercial Code Section 2A-204, Section 3-309 and under any other similar statute applicable to this Agreement.

17. FAMILIARIZATION. All familiarization requests must be made in writing not less than five (5) calendar days before scheduled delivery date or at time of purchase. Request(s) must be submitted to the location in which the Equipment was rented and identify the name of the person(s) designated to receive the Equipment. If requested, the User as defined by ANSI A92/CSA B354 agrees to have the person designated present at the time of delivery to receive the equipment familiarization. Familiarization will be made in accordance to ANSI A92 & CSA B354. Familiarization is not considered training or certification and does not impact the obligations of Section 2.

QUOTE

** COPY ** HercRentals™

R.A. No. 55811933

BRANCH: **408**	BILL TO CUSTOMER: **2603171**	SHIPPING ADDRESS
HERC SAN ANTONIO PROSOLUTIONS 11500 N LOOP ROAD SAN ANTONIO, TX 78216 210-661-4281	**HAYS COUNTY** 712 S STAGECOACH TRL, S-1071 SAN MARCOS, TX 78666	**HAYS COUNTY JOBSITE** 20290 FM 150 W DRIFTWOOD, TX 78619 512-225-5146

DESCRIPTION/CHARGES

EST START: 4/04/24 8:00 **EST RETURN:** 4/11/24 8:00 DROP DATE: _____

SHIPPED BY: ORDERED BY: AMAYA, JESSE DROP TIME: _____

ORDER DATE: 3/20/24 SALESPERSON: 110 SALES COORDINATOR:

RENTAL TAX CLAIM: COUNTY GOVERNM TAX DOCUMENT #: 74-6002241

PO# / JOB#: DRIFTWOOD TX / 2 - HAYS COUNTY JOBS

Rates subject to availability

Herc Rentals offers peace of mind when you purchase Rental Protection Plan ("RPP") at the start of your rental. This optional program limits your responsibility when accidental damage or theft occurs on covered equipment. You will be charged the RPP fee if you choose to purchase RPP or until you provide an acceptable certificate of insurance. View the benefits, details, and exclusions to RPP by visiting our website at https://www.hercrentals.com/services/rpp-rental-protection-plan/terms-and-conditions.html or contact your Herc Rentals servicing location for more information.

Qty	Equipment #	Hrs/	Min	Hour	Day	Week	4 Week	Amount
1	FUEL TANK 552 GALLON 5301050	8/	134.00	22.33	134.00	407.00	769.00	407.00
	EMISSIONS & ENV SURCHARGE EMISSIONS							8.06
	RENTAL PROTECTION PLAN							61.05

SALES ITEMS:

Qty	Item number	Unit	Price	
1	FUEL TANK INSPECTION & CLEAN 3740000001 - REVENUE	EA	275.000	275.00
1	TRANS SRVC SURCHARGE 3710000001 - TRANS SERVICE SURCHARGE		55.000	55.00
1	TRANS SRVC SURCHARGE 3710000001 - TRANS SERVICE SURCHARGE		55.000	55.00
	DELIVERY CHARGE			275.00

CONTINUED

CAREFULLY READ THE TERMS AND CONDITIONS THAT APPEAR BELOW AND ON REVERSE SIDE OF THIS PAGE ("TERMS")

RENTAL PROTECTION PLAN. Customer must either show proof of Property Insurance as required in Section 8 on reverse side hereof or purchase Rental Protection Plan ("RPP"). Herc Rentals Inc. or its affiliate ("Herc") may offer RPP for a fee to Customer on certain Equipment and for certain types of loss or damage to limit Customer´s liability for property loss or damage to such Equipment for such loss or damage. RPP is not offered on all types of Equipment. NOTWITHSTANDING PAYMENT OF THE RPP FEE, RPP DOES NOT APPLY, AND CUSTOMER IS LIABLE FOR, ALL DAMAGES TO OR REPLACEMENT COST OF, THE EQUIPMENT, AS APPLICABLE, AND ANY ADMINISTRATIVE FEES AND EXPENSES OF HERC: (1) CAUSED BY THE EQUIPMENT BEING USED OR OPERATED IN VIOLATION OF ANY OF THE TERMS; (2) IN CASE OF NEGLIGENCE, AS DETERMINED IN HERC´S SOLE DISCRETION; AND/OR (3) IF COVERAGE IS EXCLUDED UNDER THE RPP TERMS AND CONDITIONS POSTED ON HERC´S WEBSITE. Upon accepting RPP, Customer agrees to pay an RPP fee. Customer must review the RPP Terms and Conditions posted on Herc´s website at https://www.hercrentals.com/services/rpp-rental-protection-plan/terms-and-conditions.html before deciding whether to accept RPP. If Herc offers RPP to Customer for certain Equipment and Customer accepts RPP and pays Herc the RPP fee, in return for the RPP fee, if at the time of the claim, RPP covers such repair or replacement, Herc agrees to waive certain claims for accidental damages to or theft of such covered Equipment occurring during normal and careful use. Customer remains liable for all other damages as set forth in the Terms. RPP IS NOT INSURANCE. TO THE EXTENT HERC DOES NOT OFFER RPP TO CUSTOMER, OR CUSTOMER DOES NOT ACCEPT RPP, CUSTOMER MUST MAINTAIN THE PROPERTY INSURANCE COVERAGE REQUIRED BY PARAGRAPH 8. **PLEASE BE AWARE THAT IF CUSTOMER DOES NOT ELECT TO TAKE RPP AND IT ELECTS TO MAINTAIN PROPERTY INSURANCE COVERAGE, AND IF THE CERTIFICATE OF INSURANCE PROVIDED TO HERC TO EVIDENCE SUCH INSURANCE COVERAGE IS UNACCEPTABLE TO HERC OR THE APPLICABLE POLICIES EXPIRE, CUSTOMER AGREES THAT HERC MAY CHARGE RPP FOR ALL APPLICABLE RENTALS UNTIL SUCH TIME AS AN ACCEPTABLE AND VALID CERTIFICATE OF INSURANCE IS PROVIDED AND SUCH MATTERS ARE CORRECTED TO HERC'S REASONABLE SATISFACTION.** NOTWITHSTANDING ANY NOTATION ON THE RENTAL RECORD, RPP IS NOT OFFERED ON OR AVAILABLE FOR THE RENTAL OF PASSENGER MOTOR VEHICLES AND CERTAIN OTHER EQUIPMENT LISTED ON HERC´S WEBSITE.

A detailed description of fees and surcharges that may be applicable to Customer´s rental can be found on Herc´s website at https://www.hercrentals.com/services-associated-charges.html Customer agrees to pay, in addition to all rental charges, all fees and charges set forth above and, the following charges as applicable: (i) based on Customer´s possession and/or use of the Equipment, all consumables, fees, licenses, present and future taxes and any other governmental charges; (ii) additional charges for more than one shift use; (iii) freight, delivery, pick up, transportation charges; (iv) transportation service surcharges; (v) repairs and replacement per this contract; (vi) cleaning charge for Equipment returned with excessive dirt, concrete and/or paint; (vii) fees for lost keys; (viii) refueling service charges; (ix) fines for use of dyed diesel fuel in on road Equipment; (x) preventative maintenance charges; (xi) emissions and environmental surcharges and fees; (xii) vehicle license fees. HERC COLLECTS THESE FEES AND CHARGES AS REVENUE AND USES THEM AT ITS DISCRETION.

THE EQUIPMENT IS RENTED BY HERC TO THE CUSTOMER PURSUANT TO THE TERMS. CUSTOMER REPRESENTS HAVING READ AND AGREED TO SAME.

PARAGRAPH 11 ON THE BACK OF THIS PAGE IS IN LIEU OF (i) ALL WARRANTIES, EXPRESS, IMPLIED OR STATUTORY, INCLUDING, BUT NOT LIMITED TO, THE IMPLIED WARRANTY OF MERCHANTABILITY AND THE IMPLIED WARRANTY OF FITNESS FOR A PARTICULAR PURPOSE; AND (ii) ALL OBLIGATIONS ON THE PART OF HERC TO CUSTOMER FOR DAMAGES.

CUSTOMER WAIVES ALL INDIRECT, INCIDENTAL, CONSEQUENTIAL OR SPECIAL DAMAGES ARISING OUT OF OR IN CONNECTION WITH THIS AGREEMENT, INCLUDING WITHOUT LIMITATION, THE RENTAL, MAINTENANCE, USE, OPERATION, STORAGE, ERECTION, DISMANTLING OR TRANSPORTATION OF THE EQUIPMENT.

Customer is obligated to return the Equipment in a good, clean, and uncontaminated condition, free of any and all hazardous substances.

Quote Valid For 30 Days From Order Date

Customer Name _____ Title _____ **Terms are due upon receipt** Not valid without Barcode

Customer Signature _____ Date _____

For **GREAT DEALS** on **USED EQUIPMENT** - visit us on-line at HercRentals.com

QUOTE

** COPY ** HercRentals™

R.A. No. 55811933

BRANCH: **408**	BILL TO CUSTOMER: **2603171**	SHIPPING ADDRESS
HERC SAN ANTONIO PROSOLUTIONS 11500 N LOOP ROAD SAN ANTONIO, TX 78216 210-661-4281	**HAYS COUNTY** 712 S STAGECOACH TRL, S-1071 SAN MARCOS, TX 78666	**HAYS COUNTY JOBSITE** 20290 FM 150 W DRIFTWOOD, TX 78619 512-225-5146

DESCRIPTION/CHARGES

EST START: 4/04/24 8:00 **EST RETURN:** 4/11/24 8:00 DROP DATE: _____

SHIPPED BY: ORDERED BY: AMAYA, JESSE DROP TIME: _____

ORDER DATE: 3/20/24 SALESPERSON: 110 SALES COORDINATOR:

RENTAL TAX CLAIM: COUNTY GOVERNM TAX DOCUMENT #: 74-6002241

PO# / JOB#: DRIFTWOOD TX / 2 - HAYS COUNTY JOBS

Rates subject to availability

Qty	Equipment #	Hrs/	Min	Hour	Day	Week	4 Week	Amount

SALES ITEMS:

Qty	Item number	Unit	Price

PICKUP CHARGE 275.00

Sub-total: 1350.06

Rental Protection Plan: 61.05

Taxable Sub-total: 0.00

Total: 1411.11

CAREFULLY READ THE TERMS AND CONDITIONS THAT APPEAR BELOW AND ON REVERSE SIDE OF THIS PAGE ("TERMS")

RENTAL PROTECTION PLAN. Customer must either show proof of Property Insurance as required in Section 8 on reverse side hereof or purchase Rental Protection Plan ("RPP"). Herc Rentals Inc. or its affiliate ("Herc") may offer RPP for a fee to Customer on certain Equipment and for certain types of loss or damage to limit Customer´s liability for property loss or damage to such Equipment for such loss or damage. RPP is not offered on all types of Equipment. NOTWITHSTANDING PAYMENT OF THE RPP FEE, RPP DOES NOT APPLY, AND CUSTOMER IS LIABLE FOR, ALL DAMAGES TO OR REPLACEMENT COST OF, THE EQUIPMENT, AS APPLICABLE, AND ANY ADMINISTRATIVE FEES AND EXPENSES OF HERC: (1) CAUSED BY THE EQUIPMENT BEING USED OR OPERATED IN VIOLATION OF ANY OF THE TERMS; (2) IN CASE OF NEGLIGENCE, AS DETERMINED IN HERC´S SOLE DISCRETION; AND/OR (3) IF COVERAGE IS EXCLUDED UNDER THE RPP TERMS AND CONDITIONS POSTED ON HERC´S WEBSITE. Upon accepting RPP, Customer agrees to pay an RPP fee. Customer must review the RPP Terms and Conditions posted on Herc´s website at https://www.hercrentals.com/services/rpp-rental-protection-plan/terms-and-conditions.html before deciding whether to accept RPP. If Herc offers RPP to Customer for certain Equipment and Customer accepts RPP and pays Herc the RPP fee, in return for the RPP fee, if at the time of the claim, RPP covers such repair or replacement, Herc agrees to waive certain claims for accidental damages to or theft of such covered Equipment occurring during normal and careful use. Customer remains liable for all other damages as set forth in the Terms. RPP IS NOT INSURANCE. TO THE EXTENT HERC DOES NOT OFFER RPP TO CUSTOMER, OR CUSTOMER DOES NOT ACCEPT RPP, CUSTOMER MUST MAINTAIN THE PROPERTY INSURANCE COVERAGE REQUIRED BY PARAGRAPH 8. **PLEASE BE AWARE THAT IF CUSTOMER DOES NOT ELECT TO TAKE RPP AND IT ELECTS TO MAINTAIN PROPERTY INSURANCE COVERAGE, AND IF THE CERTIFICATE OF INSURANCE PROVIDED TO HERC TO EVIDENCE SUCH INSURANCE COVERAGE IS UNACCEPTABLE TO HERC OR THE APPLICABLE POLICIES EXPIRE, CUSTOMER AGREES THAT HERC MAY CHARGE RPP FOR ALL APPLICABLE RENTALS UNTIL SUCH TIME AS AN ACCEPTABLE AND VALID CERTIFICATE OF INSURANCE IS PROVIDED AND SUCH MATTERS ARE CORRECTED TO HERC'S REASONABLE SATISFACTION.** NOTWITHSTANDING ANY NOTATION ON THE RENTAL RECORD, RPP IS NOT OFFERED ON OR AVAILABLE FOR THE RENTAL OF PASSENGER MOTOR VEHICLES AND CERTAIN OTHER EQUIPMENT LISTED ON HERC´S WEBSITE.

A detailed description of fees and surcharges that may be applicable to Customer´s rental can be found on Herc´s website at https://www.hercrentals.com/services-associated-charges.html Customer agrees to pay, in addition to all rental charges, all fees and charges set forth above and, the following charges as applicable: (i) based on Customer´s possession and/or use of the Equipment, all consumables, fees, licenses, present and future taxes and any other governmental charges; (ii) additional charges for more than one shift use; (iii) freight, delivery, pick up, transportation charges; (iv) transportation service surcharges; (v) repairs and replacement per this contract; (vi) cleaning charge for Equipment returned with excessive dirt, concrete and/or paint; (vii) fees for lost keys; (viii) refueling service charges; (ix) fines for use of dyed diesel fuel in on road Equipment; (x) preventative maintenance charges; (xi) emissions and environmental surcharges and fees; (xii) vehicle license fees. HERC COLLECTS THESE FEES AND CHARGES AS REVENUE AND USES THEM AT ITS DISCRETION.

THE EQUIPMENT IS RENTED BY HERC TO THE CUSTOMER PURSUANT TO THE TERMS. CUSTOMER REPRESENTS HAVING READ AND AGREED TO SAME.

PARAGRAPH 11 ON THE BACK OF THIS PAGE IS IN LIEU OF (i) ALL WARRANTIES, EXPRESS, IMPLIED OR STATUTORY, INCLUDING, BUT NOT LIMITED TO, THE IMPLIED WARRANTY OF MERCHANTABILITY AND THE IMPLIED WARRANTY OF FITNESS FOR A PARTICULAR PURPOSE; AND (ii) ALL OBLIGATIONS ON THE PART OF HERC TO CUSTOMER FOR DAMAGES.

CUSTOMER WAIVES ALL INDIRECT, INCIDENTAL, CONSEQUENTIAL OR SPECIAL DAMAGES ARISING OUT OF OR IN CONNECTION WITH THIS AGREEMENT, INCLUDING WITHOUT LIMITATION, THE RENTAL, MAINTENANCE, USE, OPERATION, STORAGE, ERECTION, DISMANTLING OR TRANSPORTATION OF THE EQUIPMENT.

Customer is obligated to return the Equipment in a good, clean, and uncontaminated condition, free of any and all hazardous substances.

Quote Valid For 30 Days From Order Date

Customer Name _____ Title _____ **Terms are due upon receipt** Not valid without Barcode

Customer Signature _____ Date _____

For **GREAT DEALS** on **USED EQUIPMENT** - visit us on-line at HercRentals.com

RESERVATION AND RENTAL CONTRACT - HERC RENTALS INC. AND AFFILIATES ("HERC")

This Agreement ("Agreement") is for the rental of the vehicles and equipment and related services described on the other side of this page ("Front"), including all parts of and attachments and accessories to such equipment ("Equipment"). This Agreement is between the customer identified on the Front ("Customer") and Herc. Both parties acknowledge that this Agreement consists of the terms written or printed on this page and the Front.

1. NATURE OF THIS AGREEMENT. This Agreement is solely for the purpose of creating a rental transaction, which allows Customer to use the Equipment as permitted by this Agreement. CUSTOMER REPRESENTS THAT THE EQUIPMENT IS TO BE USED SOLELY AND EXCLUSIVELY FOR BUSINESS OR COMMERCIAL PURPOSES. The Equipment is owned by Herc. Customer acknowledges that no one other than Herc may transfer or assign the Equipment or any rights or obligations under this Agreement. Neither Customer nor any Authorized Operators (as defined below) are agents of Herc. No one may repair or alter the Equipment without Herc´s prior written approval. Customer will not suffer any liens or encumbrances to attach to the Equipment and will defend, indemnify, and hold Herc harmless from all loss, liability, and expense by reason thereof.

2. WHO MAY OPERATE THE EQUIPMENT. Only Customer and the following persons with Customer´s express permission, subject to the requirements of this Section, ("Authorized Operators") may operate the Equipment: Customer´s employer, employees, and fellow employees operating the Equipment in the course and scope of such employee´s regular employment, and persons approved by Herc in writing. Customer and all Authorized Operators must: only use the Equipment in the course and scope of Customer´s or Customer´s employer´s regular business operations, hold a valid driver´s license to operate a motor vehicle, be of legal age to operate the Equipment, be properly qualified and trained to operate the Equipment; and have a valid operator´s license with respect to the Equipment where required by law. Customer is solely responsible for determining that the Authorized Operators have met the requirements of this Section and are properly qualified and trained to use the Equipment prior to operating the Equipment. Customer is solely responsible for limiting the use of the Equipment to Authorized Operators meeting the requirements of this Section and for the acts and omissions of any person that operates, uses, stores or moves the Equipment regardless of whether that person is an Authorized Operator.

3. RENTAL FEES AND OTHER CHARGES. Customer will pay Herc on demand to the address and by the date specified in the applicable invoice, all charges, including without limitation, rental, time, mileage, service, transportation, refueling service, surcharges, sales and use taxes, and tax reimbursements imposed with respect to the Equipment and this Agreement, and all expenses, including reasonable attorney´s fees and costs incurred in collecting same, all in accordance with this Agreement. A detailed description of all fees and surcharges that may be applicable to Customer´s rental can be found on Herc´s website at https://www.hercrentals.com/services-associated-charges.html . Customer must notify Herc in writing of any disputed charge within 30 days of receipt of such invoice or Customer shall be deemed to have irrevocably waived such disputed charge. The basic daily, weekly and 4-week rental rates will entitle Customer to a maximum of one-shift use (i.e., a maximum of 8 hours per day; 40 hours per week; 160 hours per 4 weeks). Use in excess of one shift will be payable at the hourly rate of 1/8 of the daily charge (for a daily rental), 1/40 of the weekly charge (for a weekly rental) and 1/160 of the 4-week charge (for a 4-week rental), plus applicable taxes. All charges are subject to final audit by Herc. Herc will have a lien as allowed by law for charges incurred hereunder upon the premises and improvements upon which the Equipment is employed. Rentals are F.O.B. the Herc Branch unless otherwise specified. Shipping charges from such Branch to the Customer´s destination and return and all loading, unloading, assembling and dismantling will be paid by Customer. All rates for rentals in excess of 4 weeks are subject to change on 30 days' written notice to the Customer with respect to any portion of the rental period then remaining. Charges not paid on time, as required by this Agreement, may be subject to a late payment fee as provided in this Agreement. Customer may also be charged a reasonable fee for any check used for payment hereunder that is returned unpaid. Customer agrees in the event of a default, that any deposit made by Customer shall be used by Herc for unpaid rent and other charges, damages and costs incurred due to the default.

4. CUSTOMER´S RESPONSIBILITIES. Customer is responsible to Herc for all loss or damage to the Equipment, and for its return in the same condition it was received, except for ordinary wear, and free of any hazardous materials and/or contaminants. Such responsibility is limited to the full value of the Equipment at the time it is lost or damaged, less its salvage value, plus any administrative fees and Herc´s related expenses, such as loss of use, appraisal fees or recovery costs ("Full Value"). The Equipment must be returned to Herc at the renting Herc Branch by the Estimated Return Date (EST RETURN) specified on the Front, or sooner if demanded by Herc. Customer must notify Herc if it desires to change the EST RETURN for all or some of the Equipment. Customer acknowledges that it must confirm return receipt of the Equipment by Herc at the expiration or earlier termination of the rental. Until such time as Herc receives actual possession of the Equipment, Customer agrees to hold said Equipment in a safe and secure manner. The Equipment will be used and kept only at Customer´s place of business or the job site at which the Equipment is used and will not be moved without the prior written consent of Herc. The Equipment will be used only in accordance with the manufacturer´s instructions within its rated capacity. Customer will perform or cause to be performed and pay for all normal periodic and other basic service, adjustments and lubrication of the Equipment, including but not limited to: checking of the Equipment before each shift; checking and maintaining crankcase, transmission, cooling and fluid systems daily; and checking tire pressures and battery fluid and charge levels weekly. If the Equipment fails to operate properly or becomes in need of repair, Customer will immediately cease using same and will immediately notify Herc. Customer is solely responsible for providing a secure and safe work environment for all parties, including Herc and its employees, and for ensuring that the possession, storage, use and operation of the Equipment is carried out in compliance with applicable laws and industry standards, (including but not limited to those relating to worker safety and the environment). Customer is solely responsible for supervising the use and operation of the Equipment to ensure it is used in accordance with manufacturer instructions for proper operation and safety, for ensuring that the Equipment is proper for Customer's intended use and environment, and for ensuring users of the Equipment are qualified, trained, and familiar with the Equipment.

5. RISK OF LOSS. All loss of or damage to the Equipment from any cause whatsoever while on rental and whether or not due to the fault of Customer, including, but not limited to, fire, flood, theft, comprehensive losses, collision and rollover, and Acts of God, will be the sole responsibility of Customer and will be paid to Herc promptly upon Customer´s receipt of an invoice therefor. Such responsibility is limited to the Full Value of the Equipment at the time it is lost or damaged. THE COST OF LABOR FOR REPAIRS WILL BE EITHER HERC´S THEN PREVAILING HOURLY RATE FOR LABOR, POSTED AT THE HERC BRANCH WHERE THE EQUIPMENT IS TO BE REPAIRED, OR THE REPAIRER´S HOURLY RATE FOR LABOR CHARGED TO HERC FOR REPAIRS AS THE CASE MAY BE. PARTS WILL BE CHARGED AT HERC´S COST PLUS A RETAIL MARKUP. Use of the Equipment by persons other than Customer or Authorized Operators will be at Customer´s sole risk.

6. EVENTS OF DEFAULT. Customer shall be in default of this Agreement if Customer fails to pay any amount when due hereunder, or if Customer breaches any of the other terms of this Agreement, or if Customer becomes insolvent or ceases to do business as a going concern, or if a petition in bankruptcy is filed by or against Customer, or if Customer is in default pursuant to the provisions of any other agreement by and between Customer and Herc. Customer will further be deemed to be in default if the Equipment is obtained from Herc through fraud or misrepresentation or is stored or used: (A) in violation of any law or ordinance including without limitation, any local, state or federal law or regulation involving "Hazardous Materials," including "DOT Hazardous Materials," as set forth in 49 C.F.R. 171-180; (B) in a reckless, negligent or abusive manner, or is damaged while being rented by Customer; (C) in violation of Paragraph 4 above, (D) in any fashion or manner for which the Equipment was not designed or beyond the manufacturer´s rated capacity for the Equipment.

7. REMEDIES OF HERC. In case of default by Customer, or if Herc deems itself insecure, Herc may, but is not required to, peaceably enter the premises where the Equipment is located and render it inoperative or remove same with or without process of law and without any notice to Customer or liability. Customer hereby waives any right to any hearing or to receive any notice of legal process, as a pre-condition for Herc recovering the Equipment. Customer agrees to permit such entry and action by Herc. In such case Herc may also terminate this Agreement without notice to Customer or prejudice to any remedies or claims which Herc might otherwise have for any amount due hereunder, expense of retaking, court costs and reasonable attorneys' fees. Customer will remain liable for the Equipment or for any loss or injury to the Equipment, any property and/or persons, notwithstanding such termination. Herc shall have the right to issue and circulate theft notices, cause warrants to be issued and take any other steps which Herc may reasonably deem necessary to recover the Equipment, if the Equipment is not returned on the date specified on the Front or sooner as permitted by the terms of this Agreement. The remedies provided herein in favor of Herc are not exclusive but shall be cumulative and in addition to all other remedies existing at law or in equity, any one or more of which may be exercised simultaneously or successively.

8. INSURANCE. Liability Insurance for Injury/Damage to Third Parties - Customer agrees to maintain and carry, at its own expense and at all times during the term of this Agreement, the following insurance: (1) commercial automobile insurance, with at least a per occurrence limit of $1 million, which includes coverage for owned and non-owned motor vehicles. Herc shall be named as an additional insured for all claims arising out of the maintenance, operation, or use of the vehicle. All insurance, whether issued on a primary or umbrella/excess basis, afforded to Herc hereby shall be primary to, and non-contributory with, any other insurance on which Herc is a named insured, whether such other insurance is primary, excess, self-insurance, or insurance on any other basis, to the furthest extent permitted by law. Where, by operation of law, Herc is required to provide primary coverage, such primary and non-contributory protection shall not exceed the minimum limits required by the automobile financial responsibility laws of the applicable state. Such protection will conform to the basic requirements of the applicable No-Fault law, BUT DOES NOT INCLUDE UNINSURED/UNDERINSURED MOTORIST, SUPPLEMENTARY NO FAULT OR ANY OTHER OPTIONAL COVERAGE. TO THE EXTENT PERMITTED BY LAW, HERC AND CUSTOMER REJECT THE INCLUSION OF ANY SUCH COVERAGE. If such coverage is imposed by operation of law, then the limits of such coverage will be the minimum required by the law of the applicable state; (2) commercial general liability insurance (providing coverage equal to or greater than the standard ISO CG 00 01 12 04 form), including contractual liability coverage covering Customer's indemnity obligations of Section 9, with limits of insurance not less than $1 million per occurrence and $2 million in the aggregate. Customer shall name Herc as an additional insured for all claims and liability arising out of the maintenance, operation, or use by the Customer of equipment leased to Customer by Herc (providing coverage equal or greater than the standard ISO CG 20 28 11 85). Such insurance shall be primary and non-contributory to any other insurance maintained by Herc. Customer further agrees that the amount of insurance available to Herc shall be for the full amount of the loss up to policy limits of liability and shall not be limited to the minimum requirements of this agreement. In the event any policy provided in compliance with this agreement states that the insurance afforded to an additional insured will not be broader than that required by contract, or words of similar meaning, Customer agrees that nothing in this agreement is intended to restrict or limit the breadth of such insurance; and (3) property insurance for the full replacement cost of the Equipment, including coverage for all risks of loss or damage to the Equipment. The policy must expressly cover owned and non-owned Equipment, including motor vehicles (if applicable), while in your care, custody and control. Customer shall carry workers compensation and employers´ liability insurance with at least a per occurrence limit of $1 million. Customer shall name Herc as an additional insured for all claims arising out of the maintenance, operation or use of the equipment, and as an additional loss payee. Any deductibles or self-insured retentions shall be the sole responsibility of the Customer. All insurance required by this Rental Agreement shall include a waiver of rights of recovery against Herc or its insurers by the Customer and its insurers, as well as a waiver of subrogation against Herc or its insurers. The policies required hereunder shall provide that Herc must receive not less than 30 days' notice prior to any cancellation. **Customer shall provide Herc with documented proof of all required insurance coverage, including copies of all applicable additional insured endorsements.** FOR RENTAL OF EQUIPMENT NOT LICENSED FOR ROAD USE, CUSTOMER MUST EITHER (i) ELECT TO NAME HERC AS LOSS PAYEE EVIDENCING PROPERTY INSURANCE COVERAGE, OR (ii) ELECT TO PURCHASE THE RENTAL PROTECTION PLAN. Nothing contained in this insurance Section shall limit or modify the obligations set forth in Section 9.

9. INDEMNIFICATION. TO THE FULLEST EXTENT PERMITTED BY LAW, AND FOR AND IN ADDITIONAL CONSIDERATION OF PROVIDING THE EQUIPMENT HEREIN, CUSTOMER WILL DEFEND, INDEMNIFY AND HOLD HARMLESS HERC, ITS PARENT COMPANY, THEIR AFFILIATES, AND THEIR RESPECTIVE DIRECTORS, OFFICERS, AGENTS AND EMPLOYEES (COLLECTIVELY "HERC INDEMNIFIED PARTIES"), FROM AND AGAINST ANY AND ALL ACTUAL, ALLEGED, POTENTIAL OR PERCEIVED RISKS OF INJURY, DEMANDS, CLAIMS, SUITS, LIABILITIES, LOSSES, SETTLEMENTS, JUDGMENTS, DAMAGES (INCLUDING BUT NOT LIMITED TO COSTS, EXPENSES, DELAYS, DEDUCTIBLE AMOUNTS OF INSURANCE, THE COSTS OF ENFORCING ANY RIGHT TO INDEMNIFICATION UNDER THIS AGREEMENT, THE COST OF PURSUING ANY INSURANCE PROVIDERS, AND LIQUIDATED, CONSEQUENTIAL AND PUNITIVE DAMAGES), ENVIRONMENTAL SPILLS, ATTORNEYS' FEES AND DISPUTE RESOLUTION COSTS, WHETHER OR NOT SUCH LOSSES, LIABILITIES, CLAIMS OR DAMAGES ARE BASED, IN WHOLE OR IN PART UPON ANY OF THE HERC INDEMNIFIED PARTIES´ ALLEGED NEGLIGENCE OR PARTICIPATION IN THE WRONG OR UPON ANY ALLEGED BREACH OF A STATUTORY OR REGULATORY DUTY OR OBLIGATION ON THEIR PART, ARISEN OUT OF OR ALLEGED TO HAVE ARISING OUT OF ANY ACT OR OMISSION IN CONNECTION WITH THE CUSTOMER´S MAINTENANCE, USE, POSSESSION, OPERATION, ERECTION, DISMANTLING, SERVICING OR TRANSPORTATION OF THE EQUIPMENT OR MOTOR VEHICLE OR CUSTOMER´S FAILURE TO COMPLY WITH THE TERMS OF THIS AGREEMENT,BY REASON OF BODILY INJURY, INCLUDING DEATH, AND PROPERTY DAMAGE, SUSTAINED BY ANY PERSON OR PERSONS, INCLUDING BUT NOT LIMITED TO EMPLOYEES OF CUSTOMER. CUSTOMER WILL, AT ITS SOLE EXPENSE, COMPLY WITH ALL FEDERAL, STATE AND LOCAL LAWS AND REGULATIONS AFFECTING THE EQUIPMENT AND ITS USE, OPERATION, ERECTION, DESIGN AND TRANSPORTATION, INCLUDING WITHOUT LIMITATION, LICENSING AND BUILDING CODE REQUIREMENTS, AND WILL DEFEND, INDEMNIFY AND HOLD HERC INDEMNIFIED PARTIES HARMLESS FROM ALL LOSS, LIABILITY OR EXPENSE RESULTING FROM ACTUAL OR ALLEGED VIOLATIONS OF ANY SUCH LAWS, REGULATIONS OR REQUIREMENTS. The foregoing indemnification provisions will not reduce or affect the other rights or obligations which would otherwise exist in favor of the Herc Indemnified Parties. Any insurance requirements set forth in this Agreement or any Agreement will not limit foregoing indemnification.

10. NOTICE OF LOSS OR ACCIDENT. In the event of an accident, loss of, theft of, or damage to, spill or leak of hazardous materials from, the Equipment, Customer agrees to notify Herc as soon as possible by telephone and, thereafter, to immediately report in writing to Herc and to the public authorities (where required by law or by Herc) all necessary information relating to the loss or accident.

11. CONDITION OF THE EQUIPMENT. Customer acknowledges having examined the Equipment upon its delivery to Customer. The Equipment shall be deemed to be accepted by Customer upon delivery and subject to the terms and conditions of this Agreement. Customer shall notify Herc in writing within 24 hours of delivery of the Equipment of any problem with the Equipment. If the Equipment is found by Customer not to be in good mechanical condition, as a result of conditions not the responsibility of Customer, nor caused by the fault or negligence of Customer or Customer´s employees or agents, Customer will so notify Herc, whereupon Herc will then, at its option and without any other liability or responsibility by Herc to Customer: (a) repair or suitably replace the Equipment within a reasonable time during Herc´s normal working hours, with the commencement or running of the terms of this Agreement to be tolled for the period the Equipment is "down"; or (b) remove the Equipment and terminate this Agreement and refund payments of rental charges, if any, for the unexpired term of the Agreement, less whatever is due Herc for damage to or maintenance of Equipment which is the responsibility of Customer. Customer agrees to provide full access to the Equipment to Herc´s representatives to enable Herc to meet its responsibilities hereunder.

12. LATE PAYMENT FEE. Should Customer fail to pay any invoice to Herc in accordance with the terms of such invoice, Customer will pay a late payment fee to Herc on such delinquent payment until fully paid, at an amount up to the maximum rate allowed by the laws of the jurisdiction in which the Herc location specified on the Front is located.

13. FUELING SERVICE CHARGE. Herc agrees to provide the Equipment to Customer with full fuel tanks. Customer agrees to return the Equipment with full fuel tank(s). If Customer returns the Equipment with the fuel tank(s) less than full, Customer will pay to Herc a sum equal to Herc´s then applicable refueling service charge posted at Herc´s location where the Equipment is returned for the number of gallons required to refill the tank(s) at the time of return.

14. MERGER/MODIFICATION/SEVERABILITY. This Agreement expresses the entire agreement between the parties with respect to the subject matter hereof. No modification or alteration of the terms hereof will be effective as against Herc unless same is in writing and signed by a duly authorized officer of Herc. Customer's use and/or delivery of the Equipment and/or Customer's signing of this Agreement shall be deemed execution of this Agreement and shall constitute Customer's acceptance of all of the Terms contained on the Front hereof and herein, and the exclusion of any terms and conditions otherwise stated by Customer or contained in any of Customer's documents. The paragraph headings contained in this Agreement are for convenience only and will not be used to expand or limit the actual terms and conditions hereof. Customer and the person signing this Agreement represent that: (a) they both have full authority to execute, deliver and perform this Agreement; and (b) this Agreement is a legal, valid and binding obligation of Customer, enforceable in accordance with its terms.

15. GOVERNING LAW/JURISDICTION/JURY TRIAL WAIVER/LIMITATION OF LIABILITY. This Agreement shall be governed by and construed in accordance with the laws of the state of Delaware without regard to its rules of conflict of laws. Customer irrevocably and unconditionally consents to submit to the jurisdiction of the state and federal courts within the State of Delaware (the "Delaware Courts") or Florida ("Florida Courts") for any litigation arising out of or relating to this Agreement and the transactions contemplated hereby, and waives any objection to the laying of venue and forum in the Delaware Courts and/or the Florida Courts. If any provision, or any part of any provision of this Agreement or the application thereof is thereafter held invalid or unenforceable, the remainder of this Agreement shall not be affected thereby and to this end the provisions of this Agreement are declared severable. Each party hereby waives and releases all right to trial by jury in any action, proceeding or counterclaim brought by either party hereto against the other (and/or against its officers, directors, employees, agents, or subsidiary or affiliated entities) on any matters whatsoever arising out of or in any way connected with this Agreement. THE MAXIMUM LIABILITY OF HERC, ITS OFFICERS, DIRECTORS, EMPLOYEES, AGENTS OR AFFILIATES UNDER THIS AGREEMENT (REGARDLESS OF WHETHER A CLAIM IS BASED UPON WARRANTY, CONTRACT, TORT, NEGLIGENCE OR OTHERWISE) SHALL NOT EXCEED THE AMOUNT PAID TO HERC BY CUSTOMER UNDER THIS AGREEMENT.

16. ELECTRONIC SIGNATURES. Customer agrees that this Agreement may be signed manually or by scanning and sending .pdf or other copies thereof via email or via any other electronic means and in one or more counterparts, each of which shall be (i) an original, and all of which taken together shall constitute one and the same agreement; (ii) a valid and binding agreement and fully admissible under state and federal rules of evidence; and (iii) enforceable under the applicable Uniform Commercial Code Section 2A-204, Section 3-309 and under any other similar statute applicable to this Agreement.

17. FAMILIARIZATION. All familiarization requests must be made in writing not less than five (5) calendar days before scheduled delivery date or at time of purchase. Request(s) must be submitted to the location in which the Equipment was rented and identify the name of the person(s) designated to receive the Equipment. If requested, the User as defined by ANSI A92/CSA B354 agrees to have the person designated present at the time of delivery to receive the equipment familiarization. Familiarization will be made in accordance to ANSI A92 & CSA B354. Familiarization is not considered training or certification and does not impact the obligations of Section 2.

Jaguar Fueling - Unleaded Tank Quote

Jennifer Martinez <jennifer.martinez@jaguarfueling.com>
Wed 1/31/2024 3:33 PM
To:Norman Selbig <norman.selbig@co.hays.tx.us>

Norm, please see the quotes below. The fee is a little higher due to sending the tank from Houston.

500g tank with 12v pump kit x2

- Tank Delivery: $950.00
- Tank Pick Up: $950.00
- Satellite Monitor: $35.00 monthly
- Tank Rental: $500.00 per month (unless tank is refilled two times within that month)

1,000g tank with 12v pump kit

- Tank Delivery: $950.00
- Tank Pick Up: $950.00
- Satellite Monitor: $35.00 monthly
- Tank Rental: $900.00 per month (unless tank is refilled two times within that month)

Thank you!

The greatest compliment you can give me is a referral of my services!

Jennifer Martinez
Account Manager
Jaguar Fueling Services

P 844-524-3835 | M 432-231-2213
E jennifer.martinez@jaguarfueling.com

NOTE: The information transmitted is intended only for the person or entity to which it is addressed and may contain confidential and/or privileged material. Any review, retransmission, dissemination, or

fuel cells

Daniel Story <Daniel.Story@sunbeltrentals.com>
Thu 2/29/2024 3:17 PM
To:Jesse Amaya <jesse.amaya@co.hays.tx.us>

You don't often get email from daniel.story@sunbeltrentals.com. Learn why this is important

Jesse,

Great talking with you today.

Our fuel cells are all diesel. I checked with a local contact and they did not have any unleaded fuel cells.

Thanks for your consideration,

Daniel Story
Sunbelt Rentals, Inc.
Power and HVAC, PC578
Safety Coordinator / Equipment Rental Specialist
Making It Happen For Our Customers!
5631 S. IH 35 | New Braunfels, TX 78132
(210) 662-7743 Office| (210) 662-7932 Fax
PC578dsp@sunbeltrentals.com | www.sunbeltrentals.com

ALL EQUIPMENT MUST BE CALLED OFF. PLEASE KEEP YOUR CALL OFF NUMBERS!
Please send all credit apps to pc881creditapps@sunbeltrentals.com
Insurance COI's: insurance.certificates@sunbeltrentals.com
Tax Exemption Certificates: salestaxgroup@sunbeltrentals.com
Lien Releases: lienrelease@sunbeltrentals.com
Pay here: www.sunbeltrentals.com

From: Jesse Amaya <jesse.amaya@co.hays.tx.us>
Date: February 29, 2024 at 1:19:25 PM CST
To: Lisa Palmer <Lisa.Palmer@sunbeltrentals.com>
Cc: Bill Ayers <Bill.Ayers@sunbeltrentals.com>
Subject: Re: Sunbelt Rentals

Lisa / Bill ,

I just following up on the quotes for the 1000 Gal unleaded fuel pump tanks - Day / week and month - for both the locations.

Thank you both for your time,

Jesse Amaya
Hays County Transportation Department
Ph.# 512-738-1625

From: Jesse Amaya <jesse.amaya@co.hays.tx.us>
Sent: Tuesday, February 27, 2024 1:03 PM
To: Lisa Palmer <Lisa.Palmer@sunbeltrentals.com>
Cc: Bill Ayers <Bill.Ayers@sunbeltrentals.com>
Subject: Re: Sunbelt Rentals

Lisa,

I getting ask if we also can get quotes on 1000 gal / pump tanks - Day/week and Month.

With delivery and pick-up.

Thank you for your time,

Jesse Amaya
Hays County Transportation Department
Ph.# 512-738-1625

From: Jesse Amaya
Sent: Tuesday, February 6, 2024 11:01 AM
To: Lisa Palmer <Lisa.Palmer@sunbeltrentals.com>
Cc: Bill Ayers <Bill.Ayers@sunbeltrentals.com>
Subject: RE: Sunbelt Rentals

Lisa,

Thank you, I will keep you informed if we would like to move forward and get a scheduled date.

Sincerely,

Jesse Amaya
Hays County Transportation Department
Ph.# 512-738-1625

From: Lisa Palmer <Lisa.Palmer@sunbeltrentals.com>
Sent: Tuesday, February 6, 2024 10:03 AM
To: Jesse Amaya <jesse.amaya@co.hays.tx.us>
Cc: Bill Ayers <Bill.Ayers@sunbeltrentals.com>
Subject: Sunbelt Rentals

You don't often get email from lisa.palmer@sunbeltrentals.com. Learn why this is important

Lisa Palmer
Sunbelt Rentals, Inc | **CUSTOMER CARE SPECIALIST LEAD/TRAINER**
Making It Happen For Our Customers
PC 5000 | 13315 Carowinds Blvd | Charlotte, NC 28273
https://www.sunbeltrentals.com/customerservice/creditapplication/?c=1&o=msp

AGENDA ITEM REQUEST FORM: G. 32.

Hays County Commissioners Court

Date: 03/26/2024

Requested By: Sheriff Gary Cutler

Sponsor: Commissioner Ingalsbe

Agenda Item:

Approve out-of-state travel for Emergency Communications Manager Megan Jones and Emergency Communications Officers Ashley Klemann, Beth Ball, Madison Wattenbarger, and Tori Tyler to attend the Navigator Conference on April 16-18, 2024, in National Harbor, MD. **INGALSBE/CUTLER**

Summary:

Approve out-of-state travel for Emergency Communications Manager Megan Jones and Emergency Communications Officers Ashley Klemann, Beth Ball, Madison Wattenbarger, and Tori Tyler to attend the Navigator Conference on April 16-18, 2024, in National Harbor, MD. Navigator is a 9-1-1 specific conference offered to all telecommunicators nationwide. Through this conference, dispatchers find resources, knowledge, connections and build new skills. This is the only conference available to telecommunicators, offering multiple keynote speakers and workshops.
Funding for registration fees and travel expenses, including hotel and airfare fees, will be paid for by the Capital Area Council of Governments (CAPCOG), and per diem fees will be paid for out of the Sheriff's Office Continuing Education funds.

Fiscal Impact:

Amount Requested: $1,500
Line Item Number: 001-618-00.5551

Budget Office:

Source of Funds: General Fund
Budget Amendment Required Y/N?: No
Comments: N/A

Purchasing Office:

Purchasing Guidelines Followed Y/N?: TBD
Comments: Flight and hotel purchases need to follow the purchasing policy

Auditor's Office

G/L Account Validated Y/N?: Yes, Continuing Education Expense
New Revenue Y/N?: N/A
Comments:

AGENDA ITEM REQUEST FORM: G. 33.

Hays County Commissioners Court

Date: 03/26/2024

Requested By: Sheriff Gary Cutler

Sponsor: Commissioner Ingalsbe

Agenda Item:

Ratify the acceptance of a $1,000.00 donation to the Jr. Deputy Academy from the San Marcos Lions Club and amend the budget accordingly. **INGALSBE/CUTLER**

Summary:

The S.O. received a check for $1,000 from the San Marcos Lions Club, and they are requesting the donation be used to purchase supplies and materials for the Jr. Deputy Program. The 2024 Jr. Deputy program is scheduled for two sessions, the first beginning June 12-14 and again on July 16-18. The Community Outreach team tentatively anticipates 40-50 kids (ages 9-12) per event.

Fiscal Impact:

Amount Requested: $1,000
Line Item Number: 052-618-00.4610/.5222

Budget Office:

Source of Funds: Donated Funds
Budget Amendment Required Y/N?: Yes
Comments: N/A
($1,000) - Increase Contributions 052-618-00.4610
$1,000 - Increase Crime Prevention 052-618-00.5222

Purchasing Office:

Purchasing Guidelines Followed Y/N?: TBD
Comments: purchases will need to follow the purchasing policy

Auditor's Office

G/L Account Validated Y/N?: Yes
New Revenue Y/N?: Yes, $1,000 in Contributions
Comments:

AGENDA ITEM REQUEST FORM: G. 34.

Hays County Commissioners Court

Date: 03/26/2024

Requested By: Sheriff Gary Cutler

Sponsor: Commissioner Ingalsbe

Agenda Item:

Ratify the acceptance of donations totaling $7,881.00 on behalf of the Sheriff's Office Honor Guard and amend the budget accordingly. **INGALSBE/CUTLER**

Summary:

Thaddeus Foster, a citizen of Hays County and a current member of the Hays County Citizen Sheriff's Alumni Association, donated a 6x12 Victory Single Axle Trailer to the Sheriff's Office Honor Guard. The trailer is valued at $5,842 and includes the purchase of graphics valued at $2,039. The graphics will be applied at a future date.

Fiscal Impact:

Amount Requested: $7,881
Line Item Number: 001-618-00.4614/.5717_700

Budget Office:

Source of Funds: Donated Funds
Budget Amendment Required Y/N?: Yes
Comments: Amend budget to record value of donated equipment.
($7,881) - Increase Capital Contributions 001-618-00.4614
$7,881 - Decrease Misc Equipment Capital 001-618-00.5717_700

Purchasing Office:

Purchasing Guidelines Followed Y/N?: TBD
Comments: Graphics purchase will need to follow the purchasing policy

Auditor's Office

G/L Account Validated Y/N?: Yes
New Revenue Y/N?: Yes, $7,881 in Capital Contributions
Comments:

Attachments

Trailer & Graphics

TrailersPlus San Marcos
Dustin Quinney
5680 South Interstate Highway 35
San Marcos, TX 78666
Phone: 512-318-2630
www.trailersplus.com

Law Enforcement Assistance & developm
Law Enforcement Assistance & developm
13501 Ranch Road 12, Ste 103
Wimberley, TX 78676 USA
Phone: 5127381031
Email: thaddus.foster@comcast.net

INVOICE

Invoice: TRPL67-13671
Type: VICT612SAFS
Color: SILVER
Year: 2023
GVWR: 2990

Date: 08-31-2022 06:08:50
Number: 59551
VIN: 4RAVS1219PC059551
Manufacturer: Interstate
GAWR: 3500

Invoice Total: $5841.32
Collected: $-5841.32
Due: $0.00

Curb Weight: 1330

PartNumber	Description	Qty	Units	Each	Cost
	Trailer Invoice				
VICT612SAFS					
	6 x 12 Victory Single Axle VIN:4RAVS1219PC059551	1.	MSRP	$7869.00	$7869.00
DISCOUNT	Trailer Discount	1.00	EACH	$-2810.00	$-2810.00
	DISCOUNTED TRAILER PRICE	1.00		$5059.00	$5059.00
TITLEFEE	Title transfer-licensing fee	1.00	EACH	$115.00	$115.00
	Trailer Sales Tax		TAX	$0.00	$0.00
	Parts/Service Invoice				
09-HPL001-KA	Hockey Puck Locks. Keyed Alike. **Click For More Info**	1.00	Piece	$44.10	$44.10
10-HDCL2	Heavy Duty Coupler Lock for 2" A-frame coupler- Blue #BL468 **Click For More Info**	1.00	Each	$222.60	$222.60
LABOR	Labor Charge per 30 MInutes	1.00	Time	$60.00	$60.00
09-CLP001	Coupler Latch Pin Simple **Click For More Info**	1.00	Piece	$4.62	$4.62
02-TR0015-BLK	Tire Radial 205/75R15C on 5 Hole 545 Blk Mod Wheel	1.00	Piece	$252.00	$252.00
DOCFEE	Documentary service processing fee	1.00	EACH	$70.00	$70.00
WELDING	30 Minutes of Welding labor	1.00	Piece	$75.00	$75.00
PARTSDISCOUNT	Discount on Parts	1.00	Piece	$-75.00	$-75.00
TIRETAX	State imposed tire recycling tax/fee	1.00	EACH	$0.00	$0.00
10-SF0001	Shop Fee	2.00	Each	$7.00	$14.00
	Parts/Service Sales Tax		TAX	$0.00	$0.00
	Payments Applied				
POSTEDPMNT	Credit Card Approval:860984 Notes:amex	1.00	AMEX	$-5841.32	$-5841.32

AGREEMENT

Delivery and Payment. Delivery of parts or vehicles is to be taken within 14 days of their arrival at Seller's location or the date of this invoice whichever is later. Failure to do so shall be a breach of this agreement, and the seller may retain as liquidated damages therefore the cash and all other considerations paid by purchaser. Seller receives checks and drafts, given in whole or in part payment, conditionally only. Seller reserves title to the vehicle until the check or draft is paid by the bank on which drawn. Seller does not guarantee the delivery dates of any vehicles, products, or services. By signing this form, the Buyer hereby waives the right to later dispute authorized charges made on a credit card used as payment on this invoice.

Cancellation and Refunds. Any payments on quotes that include labor or non-stocking parts are not refundable under any circumstances. All sales are final. There are no refunds or cancellations on any opened/used merchandise or registered trailers. Any other refunds/cancellations are subject to a 25% restocking fee.

Arbitration and Waiver of Jury Trial. All irresolvable disputes or claims pertaining to the vehicles, products, or services delivered by the Seller to the Buyer or the relationships that arise there from, whether based in contract, tort or otherwise, shall be resolved by binding arbitration under the expedited procedures of the Commercial Disputes Arbitration Rules of the American Arbitration Association (AAA) and the Federal Arbitration Act in Title 9 of the US Code and the laws of the State of Idaho. Arbitration hearings will be held in the city where the Seller is located or where mutually agreed. A single arbitrator will be appointed by the AAA and will be an attorney or a retired judge with experience and knowledge in commercial transactions. Judgment upon the award rendered in arbitration shall be final and may be entered in any court, state or federal, having jurisdiction. Buyer and Seller mutually agree that in the arbitration process, that attorneys fees shall not be awarded by an arbitrator under this agreement. The arbitrator shall not award attorneys fees under this agreement, except that the Seller is allowed to recoup all costs (including attorneys fees) in recovering non payment or delinquent payment by the Buyer, which expressly

Gary Anderson

From: David J. Marshall <dmarshall716@gmail.com>
Sent: Thursday, March 14, 2024 11:03 AM
To: Gary Anderson; Gary Anderson
Subject: Fwd: FW: Trailer Wrap

You don't often get email from dmarshall716@gmail.com. Learn why this is important

Good morning,

See below for the total pricing for the trailer wrap. Thank you!

-Marshall

---------- Forwarded message ---------
From: **Jorge Galvan** <jorge@signcrafters.net>
Date: Thu, Mar 14, 2024 at 11:01
Subject: Re: FW: Trailer Wrap
To: David J. Marshall <dmarshall716@gmail.com>

Hi David,

Janey texted me and said I had a missed call from you. I am out of the office today. I did get a price for you, with the left door being left blank you are looking ate $1,189 for the vinyl graphics and $850 for the installation.

Total: $2,039 plus tax

Please let me know if you have any questions.

Best regards,

Jorge E. Galvan

Project manager

SIGN CRAFTERS INCORPORATED

Sign Crafters, Inc

2401 I-35, San Marcos, TX 78666

C: (512) 704-4345 / O: (512) 392-0205

AGENDA ITEM REQUEST FORM: G. 35.

Hays County Commissioners Court

Date: 03/26/2024

Requested By:

Sponsor: Commissioner Smith

Agenda Item:

Authorize the Commissioner Pct. 4 Office to convert the temporary Community Outreach Specialist, slot 1127-003 to full-time with benefits effective April 1, 2024 and amend the budget accordingly. **SMITH**

Summary:

This position was approved during the FY24 annual budget process to be full-time temporary through September 30, 2024 utilizing ARPA funding. The Commissioner would like to convert the position to full-time permanent to allow for benefits and accruals.

Fiscal Impact:

Amount Requested: $9,155
Line Item Number: 011-763-99-195]

Budget Office:

Source of Funds: American Rescue Plan Act (ARPA) Fund
Budget Amendment Required Y/N?: Yes
Comments: N/A

Temp to FTE		Budget Amendment:		
6,078	Retirement	3,039	Increase Retirement	011-763-99-195.5101_300
11,760	Medical Ins	5,880	Increase Medical Ins	011-763-99-195.5160_400
405	Dental Ins	203	Increase Dental Ins	011-763-99-195.5160_500
66	Life Ins	33	Increase Life Ins	011-763-99-195.5160_600
18,309	Total Impact	(9,155)	Increase Intergov Revenue	011-763-99-195.4301
9,155	FY24 (6 mos)			

Purchasing Office:

Purchasing Guidelines Followed Y/N?: N/A
Comments:

Auditor's Office

G/L Account Validated Y/N?: Yes
New Revenue Y/N?: Yes, $9,155 in Intergovernmental Revenues from ARPA 2nd tranche
Comments:

AGENDA ITEM REQUEST FORM: G. 36.

Hays County Commissioners Court

Date: 03/26/2024

Requested By: Sheriff Gary Cutler

Sponsor: Commissioner Ingalsbe

Agenda Item:

Authorize the Sheriff's Office to purchase two 9mm Glock 17s valued at $357.00 each. **INGALSBE/CUTLER**

Summary:

Currently, the S.O. keeps handguns in stock to distribute to an officer during the investigation process of an officer-involved shooting. The total purchase price is $754, including freight with GT Distributors Inc. using buyboard 698-23.

Fiscal Impact:

Amount Requested: $754
Line Item Number: 001-618-00.5206

Budget Office:

Source of Funds: General Fund
Budget Amendment Required Y/N?: No
Comments: N/A

Purchasing Office:

Purchasing Guidelines Followed Y/N?: Yes
Comments: Buyboard Contract 698-23

Auditor's Office

G/L Account Validated Y/N?: Yes, Law Enforcement Supplies Expense
New Revenue Y/N?: N/A
Comments:

Attachments

GT Quote #QTE0188387

Quote	QTE0188387
Date	3/19/2024
Page:	1

GT Distributors - Austin
1124 New Meister Ln., Ste 100
Pflugerville TX 78660
(512) 451-8298 Ext. 0000

Bill To:

Hays County Sheriffs Office (TX)
Attn: Accounts Payable
810 South Stagecoach Trail
San Marcos TX 78666

Ship To:

Hays County Sheriffs Office (TX)
1307 Old Uhland Road
San Marcos TX 78666

Purchase Order No.	Customer ID	Salesperson ID	Shipping Method	Payment Terms	Req Ship Date	Master No.
GLOCK 031924	000262	BF	FEDEX-2ND-NON	NET 15	0/0/0000	2,890,126

Quantity	Item Number	Description	UOM	Unit Price	Ext. Price
2	GLOCK-PA175S202	Glock 17 9mm FS Gen 5 LE 3 Mags Fixed Sigh	EA	$357.00000	$714.00
1	NOTES:	Notes: Quotation reflects BuyBoard Contract 698-23. Contract period 4/1/23-3/31/24. Email BuyBoard PO's to info@buyboard.com	EA	$0.00	$0.00

QUOTE IS GOOD FOR 30 DAYS. IN ORDER TO RECEIVE QUOTED PRICE PLEASE PRESENT A COPY OF QUOTE AT POINT OF SALE IN STORES OR REFERENCE QUOTE NUMBER ON PO OR REQUISITION

Thank you, your salesman was Adam Balak

Subtotal	$714.00
Misc	$0.00
Tax	$0.00
Freight	$40.00
Total	$754.00

AGENDA ITEM REQUEST FORM: G. 37.

Hays County Commissioners Court

Date: 03/26/2024

Requested By: Sheriff Gary Cutler

Sponsor: Commissioner Ingalsbe

Agenda Item:

Ratify the acceptance of an Avata Pro Combo to the Sheriff's Office Drone Team valued at $1,345.00 and amend the budget accordingly. **INGALSBE/CUTLER**

Summary:

Just recently, members of the S.O. Drone Team attended the 2024 Robotics Summit Conference Training. The Texas Public Safety Robotics Summit is an annual event that consists of four action-packed days showcasing the use of robotics (air/water/ground) in public safety via keynote presentations, live field demonstrations, training scenario stations, round table conversations, and more. Drone teams from across the United States attended the event. The event is closed to the public and meant for public safety, emergency management, disaster relief, critical infrastructure, utilities, emergency response teams, and other industry personnel only. On the final date of the event, courses are set up for drone teams to participate in. The teams that win the events are typically awarded with items ranging from equipment that would benefit drone teams.

HCSO team members achieved the fastest time in one course, leading them to win the AVATA drone. Multiple team members were utilized to complete the event, as the course necessitated several landings and take-offs, requiring fresh pilots.

Fiscal Impact:

Amount Requested: $1,345
Line Item Number: 001-618-00.4610/.5717_400

Budget Office:

Source of Funds: Donated Equipment
Budget Amendment Required Y/N?: Yes
Comments: Amend budget to record value of donated equipment.
($1,345) - Increase Contributions 001-618-00.4610
$1,345 - Increase LE Equipment Operating 001-618-00.5717_400

Purchasing Office:

Purchasing Guidelines Followed Y/N?: N/A
Comments:

Auditor's Office

G/L Account Validated Y/N?: Yes
New Revenue Y/N?: Yes, $1,345 in Contributions
Comments:

Attachments

Price from Amazon

Toys & Games › Remote & App Controlled Vehicles & Parts › Quadcopters & Multirotors

Roll over image to zoom in

9 VIDEOS

DJI Avata Pro-View Combo - First-Person View Drone UAV Quadcopter with 4K Stabilized Video, Super-Wide 155° FOV, Emergency Brake and Hover, Includes New RC Motion 2 and Goggles 2

Visit the DJI Store

4.2 ★★★★☆ 371 ratings | Search this page

50+ bought in past month

-6% $1,345.00

List Price: ~~$1,428.00~~

Or **$61.59** /mo (36 mo). Select from 1 plan

FREE Returns

Get $80 off instantly: Pay $1,265.00 ~~$1,345.00~~ upon approval for the Prime Store Card. No annual fee.

May be available at a lower price from other sellers, potentially without free Prime shipping.

Style: **Avata Pro-View Combo**

Avata | Avata Explorer Combo | **Avata Pro-View Combo**

Configuration: **Goggles 2 + RC Motion 2**

Drone Only | Goggles Integra + RC Motion 2 | **Goggles 2 + RC Motion 2**

Brand	DJI
Model Name	DJIAVATAPVCRM2
Special Feature	Fast Response, 4K Stabilized Video, Compact, Image Stabilization
Age Range (Description)	Adult
Color	Black

See more

Buy new:

$1,345.00

FREE Returns

FREE delivery **April 9 - May 1** for Prime members

Deliver to Yvette - New Braunfels 78130

Add to Cart

Buy Now

Ships from	Amazon
Sold by	RC-STORE
Returns	Eligible for Return, Refund or Replacement...
Payment	Secure transaction

See more

Add a Protection Plan:

- ☐ 2-Year Protection for $99.99
- ☐ 3-Year Protection for $129.99
- ☐ Add a gift receipt for easy returns

Save with Used - Like New

$829.00

FREE delivery **March 28 - April 1**

Ships from: Koozam - Same Day

AGENDA ITEM REQUEST FORM: G. 38.

Hays County Commissioners Court

Date: 03/26/2024

Requested By: Vickie Dorsett, Budget Officer

Sponsor: Judge Becerra

Agenda Item:

Amend various departmental operating, special revenue and capital project budgets in preparation for the County's Fiscal Year 2023 year-end process. **BECERRA/DORSETT**

Summary:

These budget amendments are line item transfers within various departments and special revenue funds in order to record right-to-use assets as required per Governmental Accounting Standards Board (GASB) Statement No. 87 and No. 96. No additional funds are required.

Fiscal Impact:

Amount Requested: N/A
Line Item Number: Various

Budget Office:

Source of Funds: Various
Budget Amendment Required Y/N?: Yes
Comments: N/A

Purchasing Office:

Purchasing Guidelines Followed Y/N?: N/A
Comments:

Auditor's Office

G/L Account Validated Y/N?: Yes
New Revenue Y/N?: Other Financing Sources for Right To Use Leased Assets
Comments:

AGENDA ITEM REQUEST FORM: G. 39.

Hays County Commissioners Court

Date: 03/26/2024

Requested By: Constable Don Montague

Sponsor: Commissioner Shell

Agenda Item:

Authorize the Constable Pct. 3 Office to utilize Dana Safety Supply for the installation of three vehicle docking stations and amend the budget accordingly. **SHELL/MONTAGUE**

Summary:

The Constable Pct. 3 Office received donated funds in FY23 that were not utilized by the end of the fiscal year and would like to utilize those funds in FY24 to procure installation services for vehicle docking stations for three LE trucks.

Fiscal Impact:

Amount Requested: $930
Line Item Number: 001-637-00.5413

Budget Office:

Source of Funds: General Fund
Budget Amendment Required Y/N?: Yes
Comments: Prior year donation not expended rolled into the county reserves. Will reduce misc income in current year to allow donated funds to be expended.
$930 - Increase Vehicle Maintenance & Repair 001-637-00.5413
($930) - Reduce Misc. Income 001-000-00.4630

Purchasing Office:

Purchasing Guidelines Followed Y/N?: Yes
Comments: The Interlocal Purchasing System (TIPS) Contract #210102

Auditor's Office

G/L Account Validated Y/N?: Yes
New Revenue Y/N?: N/A
Comments:

Attachments

Dana safety Supply Quote

Sales Quote

DANA SAFETY SUPPLY, INC
4809 KOGER BLVD
GREENSBORO, NC 27407

Telephone: 800-845-0405

Sales Quote No.	522072-A
Customer No.	HAYSCOSO

Bill To	Ship To
HAYS COUNTY PCT. 3 200 Stillwater Wimberley, TX 78676	(For Pickup) ROUND ROCK WAREHOUSE 900 E Old Settlers Blvd Ste 400 Bldg 4 Round Rock, TX 78664
Contact: Sgt. DOnny Torres **Telephone:** 512-847-5532 **E-mail:** donny.torres@co.hays.tx.us	**Contact:** Scott Beal **Telephone:** 682-888-4235 **E-mail:** sbeal@danasafetysupply.com

Quote Date	Ship Via	F.O.B.	Customer PO Number	Payment Method
02/27/24	GROUND SHIPMENT	QUOTED FREIGHT		NET30

Entered By	Salesperson	Ordered By	Resale Number
Scott Beal	SCOTT BEAL ROUND ROCK	SGT. DONNY TORRES	

Order Quantity	Approve Quantity	Tax	Item Number / Description	Unit Price	Extended Price
1	1	N	INFO TIPS USA CONTRACT #210102 Warehouse: RROC	0.0000	0.00
3	3	N	INFO VEHICLE DOCK INSTALLATION Warehouse: RROC 2014 Ford F-150 Vin # 1FTFW1CF3EKF79205 (John Zamora). 2015 Ford F-150 Vin # 1FTEX1CF2FKE89764 (Michael Fuentes). 2017 Ford F-150 Vin # 1FTEW1EFXHKC30667 (John Sylvester)	0.0000	0.00
3	3	N	INFO CUSTOMER SUPPLIED EQUIPMENT Warehouse: RROC DOCKING STATION AND POWER SUPPLY	0.0000	0.00
3	3	N	INSTALL KIT MISC INSTALLATION SUPPLIES I.E. Warehouse: RROC MSRP: $150.00 LOOM, WIRE, HARDWARE, CONNECTORS, ETC **********	25.0000	75.00
9	9	N	INSTALL DSS INSTALLATION OF EQUIPMENT Warehouse: RROC 3 HOURS PER UNIT at $95.00 PER HOUR REMOVE EXISTING SURFACEPRO SYSTEM BEFORE INSTALLING NEW POWER SUPPLY AND DOCKIN STATION.	95.0000	855.00

Print Date	03/22/24
Print Time	04:55:35 PM
Page No.	1

Printed By: Scott Beal

Continued on Next Page

Sales Quote

DANA SAFETY SUPPLY, INC
4809 KOGER BLVD
GREENSBORO, NC 27407

Telephone: 800-845-0405

Sales Quote No.	522072-A
Customer No.	HAYSCOSO

Bill To	Ship To
HAYS COUNTY PCT. 3 200 Stillwater Wimberley, TX 78676	(For Pickup) ROUND ROCK WAREHOUSE 900 E Old Settlers Blvd Ste 400 Bldg 4 Round Rock, TX 78664
Contact: Sgt. DOnny Torres **Telephone:** 512-847-5532 **E-mail:** donny.torres@co.hays.tx.us	**Contact:** Scott Beal **Telephone:** 682-888-4235 **E-mail:** sbeal@danasafetysupply.com

Quote Date	Ship Via	F.O.B.	Customer PO Number	Payment Method
02/27/24	GROUND SHIPMENT	QUOTED FREIGHT		NET30

Entered By	Salesperson	Ordered By	Resale Number
Scott Beal	SCOTT BEAL ROUND ROCK	SGT. DONNY TORRES	

Order Quantity	Approve Quantity	Tax	Item Number / Description	Unit Price	Extended Price
			Approved By: _____ ☐ **Approve All Items & Quantities** **Quote Good for 30 Days**		

Print Date	03/22/24
Print Time	04:55:35 PM
Page No.	2

Printed By: Scott Beal

Subtotal	930.00
Freight	0.00
Order Total	930.00

AGENDA ITEM REQUEST FORM: I. 1.

Hays County Commissioners Court

Date: 03/26/2024

Requested By: Jerry Borcherding, P.E., Transportation Director

Sponsor: Commissioner Shell

Agenda Item

Discussion and possible action to approve the selection of Cobb, Fendley & Associates, Inc. to provide utility coordination services for the Jacobs Well Curve project in Precinct 3; and authorize staff and counsel to negotiate a contract.
SHELL/BORCHERDING

Summary

The Jacobs Well Curve project [26-775-020] is currently in design by Freese and Nichols, Inc. and requires utility coordination services.

Cobb, Fendley & Associates, Inc. (CFA) has been pre-qualified by Hays County for the requested services through RFQ 2018-P16 on December 11, 2018, Item 13. The process to initially select an engineer consultant to negotiate a scope of work and fee proposal, with subsequent action by the Hays County Commissioners Court to approve the contract integrating the negotiated scope of work and fee proposal, follows the process set forth in the Hays County Purchasing Policy and Procedures Manual, revised May 30, 2017.

AGENDA ITEM REQUEST FORM: I. 2.

Hays County Commissioners Court

Date: 03/26/2024

Requested By: Jerry Borcherding, P.E., Transportation Director

Sponsor: Commissioner Shell

Agenda Item

Discussion and possible action to approve the selection of LJA Engineering, Inc. to provide right-of-way acquisition services for the Jacobs Well Curve project in Precinct 3; and authorize staff and counsel to negotiate a contract.
SHELL/BORCHERDING

Summary

The Jacobs Well Curve project [26-775-020] is currently in design by Freese and Nichols, Inc. and requires right-of-way coordination services.

LJA Engineers, Inc. has been pre-qualified by Hays County for the requested services through RFQ 2021-Q02 on July 27, 2021 Item 48. The process to initially select a consultant to negotiate a scope of work and fee proposal, with subsequent action by the Hays County Commissioners Court to approve the contract integrating the negotiated scope of work and fee proposal, follows the process set forth in the Hays County Purchasing Policy and Procedures Manual, revised May 30, 2017.

AGENDA ITEM REQUEST FORM: I. 3.

Hays County Commissioners Court

Date: 03/26/2024

Requested By: Jerry H. Borcherding

Sponsor: Commissioner Ingalsbe

Agenda Item

Discussion and possible action approve the selection of Pape-Dawson Engineers to study Right-of-Way requirements for the extension of Posey Road from CR 266 to Centerpoint Road; and authorize staff and counsel to negotiate a contract.
INGALSBE/BORCHERDING

Summary

This extension would provide a safe and more direct route to Centerpoint Road and, via Beback Inn Road, to Hwy 123. The study will investigate ROW needs and appraisal costs.

AGENDA ITEM REQUEST FORM: I. 4.

Hays County Commissioners Court

Date: 03/26/2024

Requested By: Jerry Borcherding, P.E., Transportation Director

Sponsor: Commissioner Shell

Agenda Item

Discussion and possible action to approve the selection of American Structurepoint, Inc. (ASI) to provide engineering design services for RM 150 Realignment from I-35 (at Yarrington Road) to RM 150 at Arroyo Ranch Road in Precinct 3; and authorize staff and counsel to negotiate a contract. **SHELL/BORCHERDING**

Summary

The RM 150 Realignment from I-35 (at Yarrington Road) to RM 150 at Arroyo Ranch Road project has been identified by the Transportation Department as a project they would like to move forward with PS&E Design.

American Structurepoint, Inc. (ASI) has been pre-qualified by Hays County for the requested services through RFQ 2021-Q01. The process to initially select a consultant to negotiate a scope of work and fee proposal, with subsequent action by the Hays County Commissioners Court to approve the contract integrating the negotiated scope of work and fee proposal, follows the process set forth in the Hays County Purchasing Policy and Procedures Manual, revised May 30, 2017.

AGENDA ITEM REQUEST FORM: I. 5.

Hays County Commissioners Court

Date: 03/26/2024

Requested By: Jerry Borcherding

Sponsor: Commissioner Cohen

Agenda Item

Discussion and possible action to call for a public hearing on April 9,2024 to establish a "No Parking" zone along the south side (school side) of Vista Gardens Drive from Aura Drive to Sunbright Boulevard for Sunfield Elementary School. **COHEN/BORCHERDING**

Summary

In response to a request by the Hays CISD, there is a need to establish a "No Parking" zone along the school side of Vista Garden Drive (Sunfield subd.) with signage within the ROW. Vehicles are parking at this location to drop off & pick up students for Sunfield Elementary School, however the eastbound lane needs to be clear for both the vehicles attempting to exit the school. (Please see attachment)

Attachments

Vista Gardens No Parking Backup

Sunfield Elementary
No-Parking Vista Gardens Drive
Aura Drive
Vista Garden Drive
Sunbright Boulevard
NO PARKING ANY TIME
Vista Gardens Dr
Parkrose Dr
Tangerine Dr
Baker Ln
Sunbright Blvd
Betony Ln
Joseph dr
Everglade Dr
Martha Dr
Palm Dr
Sundown Ave
Fire Cracker Dr
Moonwalker Trail
Pine Arbol
Stella Gold Street
Dandy Dr
Sunfield Elementary
Hill Country Photo Booth Co
Google Earth
Image © 2024 Airbus
N

AGENDA ITEM REQUEST FORM: I. 6.

Hays County Commissioners Court

Date: 03/26/2024

Requested By: Jerry Borcherding

Sponsor: Commissioner Smith

Agenda Item

Discussion and possible action to consider the release of the subdivision bond #PB3010406555 in the amount of $843,062.00 for Headwaters at Barton Creek Ph.4-Sec. 5 and the acceptance of roads and surface drainage improvements into the County Road Maintenance System. **SMITH/BORCHERDING**

Summary

Staff recommends acceptance of these roads into the county road maintenance system. Roads include: Headwaters Boulevard (3,386 ft.) and Mira Vista Drive (153 ft.).

Attachments

Plat Backup

STATE OF TEXAS §
COUNTY OF HAYS §
KNOW ALL THESE MEN BY PRESENTS:

THAT, WFC HEADWATERS OWNER VII, L.P., A DELAWARE LIMITED PARTNERSHIP, THE OWNER OF THE REMAINDER OF 1035.74 ACRES AS CONVEYED IN VOLUME 4832, PAGE 118 AS DOCUMENT NUMBER 2014-14000136 OF THE OFFICIAL PUBLIC RECORDS OF HAYS COUNTY, TEXAS, DOES HEREBY SUBDIVIDE A TOTAL OF 101.65 ACRES OF LAND TO BE KNOWN AS "HEADWATERS AT BARTON CREEK, PHASE 4, SECTION 5", IN ACCORDANCE WITH THE PLAT SHOWN HEREON, SUBJECT TO ANY AND ALL EASEMENTS OR RESTRICTIONS HEREFORE GRANTED, AND DOES DEDICATE TO THE PUBLIC THE USE OF STREETS AND EASEMENTS AS SHOWN HEREON

WITNESS MY HAND, THIS THE 22nd DAY OF January, 2020 A.D.

WFC HEADWATERS OWNER VII, L.P.,
A DELAWARE LIMITED PARTNERSHIP

BY: WFC HEADWATERS GP VII, L.L.C.,
A DELAWARE LIMITED LIABILITY COMPANY
ITS GENERAL PARTNER

BY: _____
NAME: JESSE E. BAYER
TITLE: AUTHORIZED SIGNATORY
C/O 500 BOYLSTON STREET, SUITE 2010
BOSTON, MA 02116

STATE OF MASSACHUSETTS §
COUNTY OF SUFFOLK §

BEFORE ME, THE UNDERSIGNED, A NOTARY PUBLIC IN AND FOR SAID COUNTY AND STATE, ON THIS DAY PERSONALLY APPEARED JESSE E. BAYER, KNOWN TO BE THE PERSON WHOSE NAME IS SUBSCRIBED TO THE FOREGOING INSTRUMENT, AND ACKNOWLEDGED TO ME THAT HE EXECUTED THE SAME FOR THE PURPOSES AND CONSIDERATION THEREIN EXPRESSED.

GIVEN UNDER MY HAND AND SEAL OF OFFICE, THIS THE 22nd DAY OF January, 2020 A.D.

_____
(NOTARY PUBLIC IN AND FOR STATE OF TEXAS)

SADIE FIELDING
(PRINT OR TYPE NOTARY'S NAME)

LEINHOLDER CONSENT:
PIONEER BANK, SSB

_____
CHRIS BOURNE
CENTRAL TEXAS REGIONAL PRESIDENT

ADDRESS FOR NOTICES: 623 W. 38TH STREET, SUITE 100
AUSTIN, TEXAS 78705
ATTN: CHRIS BOURNE

STATE OF TEXAS §
COUNTY OF HAYS §

BEFORE ME, THE UNDERSIGNED, A NOTARY PUBLIC IN AND FOR SAID COUNTY AND STATE, ON THIS DAY PERSONALLY APPEARED CHRIS BOURNE, KNOWN TO BE THE PERSON WHOSE NAME IS SUBSCRIBED TO THE FOREGOING INSTRUMENT, AND ACKNOWLEDGED TO ME THAT HE EXECUTED THE SAME FOR THE PURPOSES AND CONSIDERATION THEREIN EXPRESSED.

GIVEN UNDER MY HAND AND SEAL OF OFFICE, THIS THE 24 DAY OF January, 2020 A.D.

_____
(NOTARY PUBLIC IN AND FOR STATE OF TEXAS)

MATT D. MATTHEWS
(PRINT OR TYPE NOTARY'S NAME)

MATT DEWAYNE MATTHEWS
Notary Public, State of Texas
Comm. Expires 06-01-2022
Notary ID 128989283

SEWAGE DISPOSAL/INDIVIDUAL WATER SUPPLY CERTIFICATION TO-WIT:

NO STRUCTURE IN THIS SUBDIVISION SHALL BE OCCUPIED UNTIL CONNECTED TO AN INDIVIDUAL WATER SUPPLY OR STATE-APPROVED COMMUNITY WATER SYSTEM. DUE TO DECLINING WATER SUPPLIES AND DIMINISHING WATER QUALITY, PROSPECTIVE PROPERTY OWNERS ARE CAUTIONED BY HAYS COUNTY TO QUESTION THE SELLER CONCERNING GROUND WATER AVAILABILITY. RAIN WATER COLLECTION IS ENCOURAGED AND IN SOME AREAS MAY OFFER THE BEST RENEWABLE WATER RESOURCE.

NO STRUCTURE IN THIS SUBDIVISION SHALL BE OCCUPIED UNTIL CONNECTED TO A PUBLIC SEWER SYSTEM OR TO AN ON-SITE WASTEWATER SYSTEM WHICH HAS BEEN APPROVED AND PERMITTED BY HAYS COUNTY DEVELOPMENT SERVICES.

NO CONSTRUCTION OR OTHER DEVELOPMENT WITHIN THIS SUBDIVISION MAY BEGIN UNTIL ALL HAYS COUNTY DEVELOPMENT PERMIT REQUIREMENTS HAVE BEEN MET.

_____ 2-7-2020
TOM HOPE, R.S., CFM — DATE
HAYS COUNTY FLOOD PLAIN ADMINISTRATOR

_____ 2-7-2020
CAITLYN STRICKLAND — DATE
DIRECTOR
HAYS COUNTY DEVELOPMENT SERVICES

STATE OF TEXAS §
CITY OF DRIPPING SPRINGS §
COUNTY OF HAYS §

ADMINISTRATIVE PLAT APPROVAL.
THIS PLAT, HEADWATERS AT BARTON CREEK, PHASE 4, SECTION 5; HAS BEEN SUBMITTED TO AND CONSIDERED BY THE CITY OF DRIPPING SPRINGS, TEXAS AS A FINAL PLAT FOR ADMINISTRATIVE APPROVAL PURSUANT TO ORDINANCE 1230.09 AND HAS BEEN FOUND TO COMPLY WITH THE CITY'S CODE OF ORDINANCES AND IS HEREBY APPROVED ADMINISTRATIVELY.

APPROVED, THIS THE 11th DAY OF February, 2020 A.D. BY

_____ 2/11/2020
MICHELLE FISCHER, CITY ADMINISTRATOR — DATE

STATE OF TEXAS §
COUNTY OF HAYS §

I, THE UNDERSIGNED, DIRECTOR OF THE HAYS COUNTY DEVELOPMENT SERVICES, HEREBY CERTIFY THAT THIS SUBDIVISION PLAT CONFORMS TO ALL HAYS COUNTY REQUIREMENTS AS STATED IN THE INTERLOCAL COOPERATION AGREEMENT BETWEEN HAYS COUNTY AND THE CITY OF DRIPPING SPRINGS FOR SUBDIVISION REGULATION WITHIN THE EXTRATERRITORIAL JURISDICTION OF THE CITY OF DRIPPING SPRINGS.

_____ 2-7-2020
CAITLYN STRICKLAND — DATE
DIRECTOR
HAYS COUNTY DEVELOPMENT SERVICES

WATER SUPPLY NOTE:

THE CITY OF DRIPPING SPRINGS, A RETAIL WATER PROVIDER TO THE HEADWATERS MUD, HAS THE REQUIRED SERVICE CAPACITY TO SERVE THIS SUBDIVISION IN ACCORDANCE WITH ITS TARIFF AND POLICIES.

_____ 2/12/2020
GINGER FAUGHT, DEPUTY CITY ADMINISTRATOR — DATE
512-858-4725

SURVEYOR'S CERTIFICATION:
I, THE UNDERSIGNED, A REGISTERED PROFESSIONAL LAND SURVEYOR IN THE STATE OF TEXAS, HEREBY CERTIFY THAT THIS PLAT IS TRUE AND CORRECT, THAT IT WAS PREPARED FROM AN ACTUAL SURVEY OF THE PROPERTY MADE UNDER MY SUPERVISION ON THE GROUND, AND THAT ALL NECESSARY SURVEY MONUMENTS ARE CORRECTLY SET OR FOUND AS SHOWN THEREON.

_____ 01-16-2020
JOHN BRAUNIGAM — DATE
REGISTERED PROFESSIONAL LAND SURVEYOR
NO. 5057 STATE OF TEXAS
DELTA SURVEY GROUP, INC.
8213 BRODIE LANE, SUITE 102
AUSTIN, TEXAS 78745
TBPLS FIRM NO. 10004700

STATE OF TEXAS REGISTERED JOHN E. BRAUNIGAM 5057 PROFESSIONAL LAND SURVEYOR

ENGINEER'S CERTIFICATION:
I, JESSE B. MALONE, A REGISTERED PROFESSIONAL ENGINEER, DO HEREBY CERTIFY THAT THE RESIDENTIAL LOTS IN THIS SUBDIVISION ARE NOT LOCATED WITHIN ANY DESIGNATED 100-YEAR FLOOD PLAIN AS DELINEATED ON THE FLOOD INSURANCE RATE MAP (FIRM) MAP NO. 48209C0184F, REVISED SEPTEMBER 2, 2005 AS PREPARED BY THE FEDERAL EMERGENCY MANAGEMENT AGENCY.

_____ 1/20/2020
JESSE B. MALONE, P.E. — DATE
REGISTERED PROFESSIONAL ENGINEER NO. 45033
MALONE/WHEELER, INC.
5113 SOUTHWEST PKWY, STE 260
AUSTIN, TEXAS 78735
FIRM REGISTRATION NO. F-786

STATE OF TEXAS LICENSED JESSE B. MALONE 108734 PROFESSIONAL ENGINEER

STATE OF TEXAS §
COUNTY OF HAYS §

KNOW ALL MEN BY THESE PRESENTS:
THAT, ELAINE H. CARDENAS, COUNTY CLERK OF HAYS COUNTY COURT DOES HEREBY CERTIFY THAT THE FOREGOING INSTRUMENT OF WRITING AND THE CERTIFICATE OF AUTHENTICATION WAS FILED FOR RECORDS IN MY OFFICE ON THE 13 DAY OF February, 2020 A.D. IN THE OFFICIAL PUBLIC RECORDS OF SAID COUNTY AND STATE IN DOCUMENT NUMBER 20005490 WITNESS MY HAND AND SEAL OF OFFICE OF COUNTY CLERK OF SAID COUNTY ON THIS THE 13 DAY OF February, 2020 FILED FOR RECORD AT 4:30 O'CLOCK P.M. THIS THE 13 DAY OF February, 2020 A.D.

Elaine H. Cardenas by Jill Ketchum, Deputy
ELAINE H. CARDENAS
COUNTY CLERK
HAYS COUNTY, TEXAS

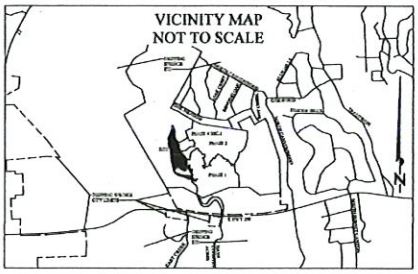

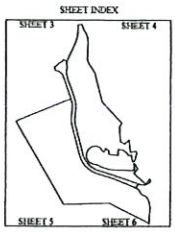

LOT AREA TABLE

BLOCK 'G' - NON-RESIDENTIAL

LOT #	ACRES	SQ. FEET
1	56.63	2466909
TOTAL	56.63	2466909

BLOCK 'C' - NON-RESIDENTIAL

LOT #	ACRES	SQ. FEET
143	38.75	1687936
TOTAL	38.75	1687936

LINE	BEARING	DISTANCE
L1	S48°51'32"E	23.89'
L2	S41°32'39"W	42.79'
L3	S21°02'24"W	95.15'
L4	N63°22'24"W	28.85'
L5	S35°31'24"W	89.65'
L6	S64°58'01"E	97.68'
L7	N31°28'39"E	119.87'
L8	S01°52'38"W	40.89'
L9	S58°58'29"E	50.54'
L10	S65°46'56"E	51.67'
L11	S06°17'55"E	100.03'
L12	S16°22'35"W	55.72'
L13	S83°09'49"W	36.59'
L14	N84°48'02"W	124.86'
L15	S89°25'48"W	79.70'
L16	N03°05'22"W	32.19'
L17	N87°41'22"W	95.85'
L18	S02°16'45"W	110.93'
L19	N87°54'59"W	76.19'
L20	N83°19'49"W	77.97'
L21	N73°29'17"W	45.09'
L22	N16°32'43"E	33.10'
L23	N13°58'51"W	44.28'
L24	N65°06'36"W	73.16'
L25	S28°14'54"W	70.49'
L26	N81°07'00"W	37.31'
L27	N38°13'22"W	87.70'
L28	N79°37'21"W	81.82'
L29	S81°55'12"W	91.28'
L30	S33°24'33"W	51.63'
L31	S24°51'50"W	91.39'
L32	S03°49'20"E	51.64'
L33	S28°49'05"E	87.66'
L34	S63°53'08"E	106.80'
L35	S79°52'58"E	84.75'
L36	S63°47'21"E	52.83'
L37	S72°51'32"E	55.40'
L38	S78°12'33"E	55.44'
L39	S85°17'38"E	90.52'
L40	S57°40'07"E	79.59'
L41	S87°48'27"E	108.21'
L42	N83°00'46"E	69.31'
L43	N56°38'18"W	124.91'
L44	N83°01'42"E	14.79'
L45	S06°21'17"E	37.58'
L46	S68°55'36"E	22.67'

CURVE	RADIUS	ARC	CHORD	BEARING	DELTA
C1	20.00'	31.56'	28.38'	S63°39'36"E	90°42'31"
C2	269.32'	173.89'	172.78'	S72°33'09"W	37°25'09"
C3	1259.93'	65.88'	65.87'	N66°55'17"W	2°59'45"
C4	123.00'	111.87'	108.09'	S42°36'22"E	52°06'45"
C5	99.50'	107.14'	102.04'	S43°48'00"E	61°41'49"
C6	122.39'	106.07'	102.78'	S53°37'20"E	49°39'19"
C7	449.46'	271.89'	267.68'	S11°18'06"E	34°38'54"
C8	550.00'	123.79'	123.53'	S00°23'16"E	12°53'46"
C9	175.64'	85.32'	84.48'	S02°15'18"W	27°53'53"
C10	225.00'	49.89'	49.78'	S05°59'24"W	12°42'12"
C11	20.00'	27.66'	25.51'	S43°30'46"W	79°14'17"
C12	19.99'	27.79'	25.54'	S57°15'48"E	79°24'58"
C13	225.00'	101.70'	100.84'	S30°25'03"E	25°53'51"
C14	1465.00'	174.68'	174.57'	N71°02'27"W	6°49'54"
C15	535.00'	562.22'	536.71'	N44°21'04"W	60°12'41"
C16	535.00'	182.32'	181.44'	N54°28'58"W	19°31'31"
C17	465.00'	198.69'	197.35'	N56°58'18"W	24°30'12"
C18	535.00'	228.80'	227.00'	S66°58'18"E	24°30'12"
C19	465.00'	158.46'	157.70'	S54°28'58"E	19°31'31"
C20	465.00'	488.60'	466.48'	S44°21'04"E	60°12'41"
C21	1535.00'	98.31'	98.09'	S72°36'22"E	3°41'04"
C22	78.59'	3.12'	3.12'	N20°21'41"W	2°16'33"
C23	153.59'	106.96'	104.81'	N41°27'38"W	39°55'22"
C24	106.59'	7.81'	7.81'	N35°19'16"W	4°12'06"
C25	128.59'	87.74'	86.05'	N76°46'36"W	39°07'23"
C26	153.59'	90.91'	89.59'	N53°11'03"E	33°56'04"
C27	156.59'	61.84'	60.97'	N52°51'01"E	33°15'01"
C28	128.59'	87.74'	86.05'	N49°55'19"E	39°07'23"
C29	153.59'	16.04'	16.04'	N19°59'39"E	5°59'18"
C30	78.59'	3.12'	3.12'	N23°58'54"E	2°16'33"
C31	835.00'	432.94'	428.10'	N19°15'58"E	29°42'25"
C32	441.69'	310.45'	304.10'	S16°13'06"E	40°15'17"
C33	216.66'	109.40'	108.24'	S17°55'27"E	28°55'48"
C34	153.59'	90.91'	89.59'	S06°06'43"E	33°56'04"
C35	106.59'	78.48'	76.71'	S04°01'51"W	42°11'11"
C36	128.59'	94.59'	92.23'	S04°05'48"W	42°05'18"
C37	78.59'	3.12'	3.12'	S18°05'08"E	2°16'33"

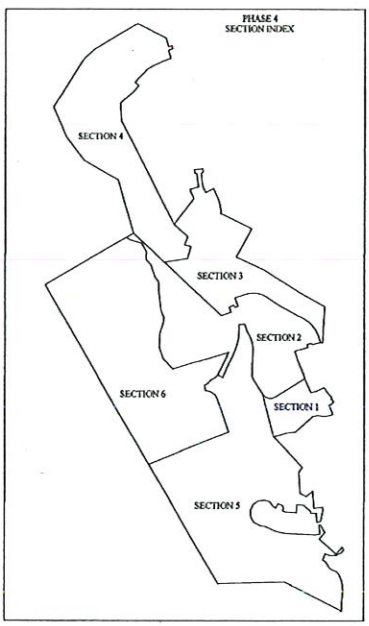

FLOODPLAIN NOTE:
THIS PROPERTY IS LOCATED WITHIN ZONE "X", AREAS DETERMINED TO BE OUTSIDE THE 0.2% ANNUAL CHANCE FLOODPLAIN, AS SHOWN ON F.I.R.M. PANEL NO. 48209C0108F, HAYS COUNTY, TEXAS DATED SEPTEMBER 2, 2005. THIS FLOOD STATEMENT DOES NOT IMPLY THAT THE PROPERTY AND/OR THE STRUCTURES THEREON WILL BE FREE FROM FLOODING OR FLOOD DAMAGE. THIS FLOOD STATEMENT SHALL NOT CREATE LIABILITY ON THE PART OF THE SURVEYOR.

JURISDICTION PLAT NOTES:
1. THIS SUBDIVISION IS WITHIN THE BOUNDARIES OF THE CITY OF DRIPPING SPRINGS ETJ, HAYS COUNTY
2. THIS SUBDIVISION IS WITHIN THE BOUNDARIES OF THE DRIPPING SPRINGS INDEPENDENT SCHOOL DISTRICT.
3. THIS SUBDIVISION IS ENTIRELY WITHIN THE HAYS COUNTY ESD #1 FOR EMS SERVICE.
4. THIS SUBDIVISION IS ENTIRELY WITHIN THE HAYS COUNTY ESD #6 FOR FIRE SERVICE.
5. THIS SUBDIVISION IS ENTIRELY WITHIN THE HAYS-TRINITY GROUNDWATER CONSERVATION DISTRICT.
6. THIS SUBDIVISION IS WITHIN THE EDWARDS AQUIFER CONTRIBUTING ZONE.

GENERAL NOTES
1. A 15' PUBLIC UTILITY EASEMENT IS PROVIDED ALONG THE FRONT PROPERTY LINE OF ALL LOTS.
2. A 5' PUBLIC UTILITY EASEMENT IS DEDICATED ALONG EACH RESIDENTIAL SIDE LOT LINE.
3. ALL SIDEWALKS TO BE MAINTAINED BY THE ENTITIES (HEADWATERS MUNICIPAL UTILITY DISTRICT (MUD) OR THE HOME OWNERS ASSOCIATION (AS ASSIGNED) OTHER THAN HAYS COUNTY.
4. WATER QUALITY PROTECTION MEASURES OR ALTERNATIVES, SUCH AS BUFFER ZONES AND IMPERVIOUS COVER, AS SHOWN ON THE APPROVED CONSTRUCTION PLANS MAY NOT BE ALTERED WITHOUT REVIEW AND APPROVAL FROM THE HEADWATERS MUNICIPAL UTILITY DISTRICT OF HAYS COUNTY.
5. HAYS COUNTY WILL MAINTAIN ALL PUBLIC STREETS.
6. ALL PROPOSED STREETS WITHIN THIS SUBDIVISION SHALL HAVE A MIN. 4' WIDE CONCRETE SIDEWALK ALONG ONE SIDE OF THE STREET.
7. OWNERSHIP AND MAINTENANCE OF ALL NON-SINGLE FAMILY LOTS (EXCLUDING PUBLIC PARKLANDS) WILL BE THE RESPONSIBILITY OF THE HOME OWNERS ASSOCIATION OR HEADWATERS M.U.D. AS ASSIGNED.
8. ALL DRAINAGE EASEMENT LOTS AND IMPROVEMENTS CONSTRUCTED WITHIN THOSE LOTS WILL BE OWNED AND MAINTAINED BY THE HEADWATERS MUD.
9. ALL DRAINAGE EASEMENTS ON PRIVATE PROPERTY SHALL BE MAINTAINED BY THE PROPERTY OWNER OR HIS/HER ASSIGNS.
10. THE LIMITS OF THE 100-YR STORM WATER RUNOFF ARE CONTAINED WITHIN DRAINAGE EASEMENTS FOR DRAINAGE AREAS GREATER THAN 64 ACRES.
11. THE PROPERTY OWNER SHALL PROVIDE ACCESS TO DRAINAGE AND UTILITY EASEMENTS AS MAY BE NECESSARY AND SHALL NOT PROHIBIT ACCESS FOR INSPECTION, OPERATION, AND MAINTENANCE.
12. EASEMENT RESEARCH PROVIDED BY FIRST AMERICAN TITLE INSURANCE COMPANY TITLE COMMITMENT FILE NO. 201302246, ISSUED JANUARY 2, 2014.

UTILITY NOTES:
1. WASTEWATER UTILITY SERVICE WILL BE PROVIDED BY HEADWATERS MUD.
2. WATER UTILITY SERVICE WILL BE PROVIDED BY HEADWATERS MUD.
3. ELECTRIC UTILITY SERVICE WILL BE PROVIDED BY PEC.
4. TELEPHONE UTILITY SERVICE WILL BE PROVIDED BY TIME WARNER CABLE OR SIMILAR AUTHORIZED UTILITY PROVIDER.
5. GAS UTILITY SERVICE WILL BE PROVIDED BY TEXAS GAS SERVICE.

LOT SIZE CATEGORIES:
2 LOTS TOTAL
0 RESIDENTIAL LOTS
2 NON-RESIDENTIAL LOTS

AVERAGE LOT SIZE:	47.69 ACRES
LOTS LESS THAN 1 ACRE:	0
LOTS 1-2 ACRES:	0
LOTS 2-5 ACRES:	0
LOTS 5-10 ACRES:	0
LOTS 10 ACRES OR GREATER:	2

CITY OF DRIPPING SPRINGS NOTES:
1. ALL RESIDENTIAL LOTS WITHIN THIS SUBDIVISION SHALL CONNECT TO A PUBLIC WATER SOURCE.
2. NO CONSTRUCTION OR OTHER DEVELOPMENT WITHIN THIS SUBDIVISION MAY BEGIN UNTIL ALL APPLICABLE CITY OF DRIPPING SPRINGS DEVELOPMENT PERMIT REQUIREMENTS HAVE BEEN MET.
3. THIS SUBDIVISION IS SUBJECT TO ORDINANCE 1260.00, ARTICLE 24.06 REGARDING OUTDOOR LIGHTING.
4. THIS SUBDIVISION IS SUBJECT TO THE CITY OF DRIPPING SPRINGS PARKLAND DEDICATION REQUIREMENT PER THE PARK PLAN PREPARED FOR THIS SUBDIVISION.
5. THE PARKS AND OPEN SPACE SHALL BE PRIVATELY DEDICATED IN ACCORDANCE WITH THE REQUIREMENTS OF THE HEADWATERS AT BARTON CREEK DEVELOPMENT AGREEMENT.
6. WASTEWATER FOR THIS DEVELOPMENT WILL BE TREATED BY ONSITE WASTEWATER TREATMENT PLANT OWNED AND OPERATED BY THE HEADWATERS MUNICIPAL UTILITY DISTRICT (MUD).
7. THE FOLLOWING LOTS WILL BE UTILIZED FOR WATER QUALITY TREATMENT, DRAINAGE, MUNICIPAL UTILITY DISTRICT FACILITIES AND ACCESS, OPEN SPACE OR OTHER NON RESIDENTIAL USES.
   LOT 143, BLOCK C
   LOT 1, BLOCK G
8. ROADWAY DESIGN STANDARDS FOR HAYS COUNTY WERE APPROVED BY HAYS COUNTY TRANSPORTATION DEPARTMENT AND THE HAYS COUNTY COMMISSIONERS COURT ON SEPTEMBER 12, 2017.
9. THIS SUBDIVISION IS SUBJECT TO THE HEADWATERS AT BARTON CREEK DEVELOPMENT AGREEMENT, DATED JANUARY 11, 2005 AND RECORDED IN VOLUME 2675, PAGE 649, OF THE OFFICIAL PUBLIC RECORDS OF HAYS COUNTY, TEXAS AND AS AMENDED IN DOCUMENT NUMBERS 16028056, 2015005990, AND 2015032881 ALL OF THE OFFICIAL PUBLIC RECORDS, HAYS COUNTY, TEXAS, OR AS OTHERWISE AMENDED.
10. THIS SUBDIVISION IS REQUIRED TO BE COMPLIANT WITH FIRE CODE IFC2012, AS AMENDED.
11. MINIMUM RESIDENTIAL FRONT BUILDING SETBACK LINE SHALL BE TWENTY (20) FEET. CORNER LOTS SHALL HAVE A MINIMUM OF TWENTY (20) FOOT SETBACK ON FRONT-FACING STREET AND TEN (10) FOOT SETBACK ON THE OTHER STREET. MINIMUM REAR AND SIDE SETBACKS SHALL BE TWENTY (20) FEET AND FIVE (5) FEET RESPECTIVELY.

SURVEY CONTROL DATA & BEARING BASIS:
TEXAS STATE PLANE COORDINATE SYSTEM, SOUTH CENTRAL ZONE, NAD83/CORS
PROJECT CONTROL POINTS WERE ESTABLISHED USING THE 'SMARTNET' RTK NETWORK.

SURVEY CONTROL MONUMENT
C.O.A. MONUMENT E344
GRID COORDINATES
N=10055821.99
E=3093670.81
C.S.F. = 0.99997207
ELEVATION = 678.33' NAVD 88

BENCHMARK LIST:

BM #3 'SQUARE' CUT ON TOP OF CURB
ELEV.= 1217.01'
BM#4 COTTON SPINDLE SET IN TREE #6248
ELEV = 1203.27'

SUBDIVISION ROADS:

PUBLIC STREET DEDICATION

STREET SUMMARY

STREET NAME (CLASSIFICATION)	ROW WIDTH	LENGTH (LF)	PAVEMENT WIDTH (F-F)
HEADWATERS BOULEVARD (MAJOR COLLECTOR)	VARIES	3386'	VARIES' C&G
MIRA VISTA DRIVE (MAJOR COLLECTOR)	VARIES	153'	VARIES' C&G
TOTAL LINEAR FEET	3539'		

Delta Survey Group Inc.
8213 BRODIE LANE STE. 102 AUSTIN, TX. 78745
OFFICE: (512) 282-5200 FAX: (512) 282-5230
TBPLS FIRM NO. 10004700
PREPARATION DATE: 2/19/19

FINAL PLAT ESTABLISHING HEADWATERS AT BARTON CREEK, PHASE 4, SECTION 5
CITY OF DRIPPING SPINGS ETJ

W.R. WOOD SURVEY, ABSTRACT 567
LEVI LEWIS SURVEY NO. 154, ABSTRACT 639
JOHN PITTS SURVEY NO. 471, ABSTRACT 768
WM. WALKER JR. SURVEY NO. 130, ABSTRACT 475
HAYS COUNTY, TEXAS
FEBRUARY 2019

0' 100' 200' 300'
GRAPHIC SCALE
1" = 100'

N

BEARING BASIS: TEXAS STATE PLANE COORDINATE SYSTEM, SOUTH CENTRAL ZONE, NAD83/CORS

LEGEND

o	½ INCH IRON ROD WITH "DELTA SURVEY" CAP SET (UNLESS NOTED OTHERWISE)
⊙	½ INCH IRON ROD WITH CAP FOUND
♠	60D NAIL IN ROCK MOUND FOUND
◆	ELEVATION BENCH MARK
PUE	PUBLIC UTILITY EASEMENT
R.O.W.	RIGHT OF WAY
O.P.R.H.C.TX	OFFICIAL PUBLIC RECORDS, HAYS COUNTY, TEXAS
P.R.H.C.TX	PLAT RECORDS, HAYS COUNTY, TEXAS
.....	SIDEWALK

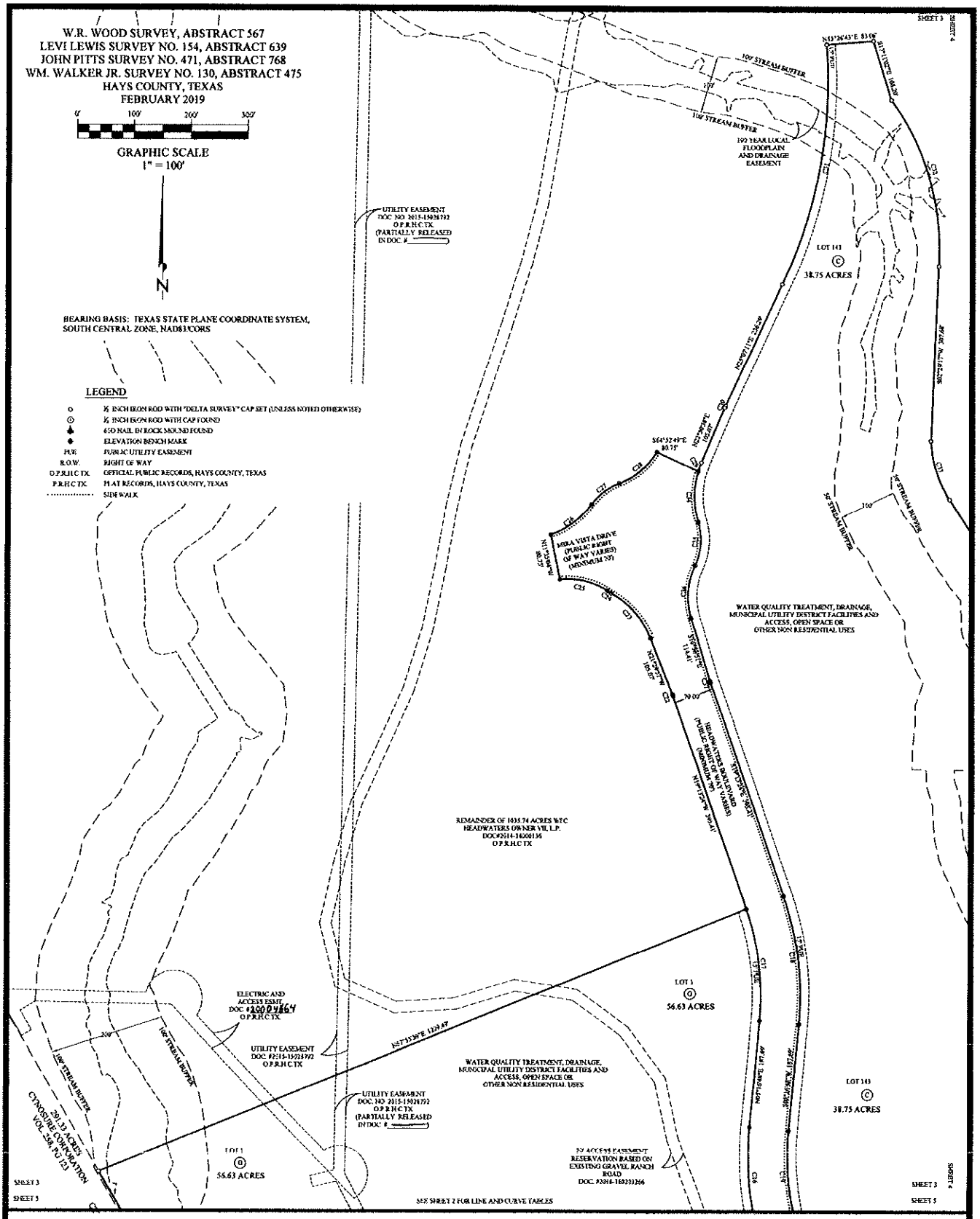

Delta Survey Group Inc.
8213 BRODIE LANE STE. 102 AUSTIN, TX. 78745
OFFICE: (512) 282-5200 FAX: (512) 282-5230
TBPLS FIRM NO. 10004700
PREPARATION DATE: 2/19/19

FINAL PLAT ESTABLISHING HEADWATERS AT BARTON CREEK, PHASE 4, SECTION 5

CITY OF DRIPPING SPINGS ETJ

W.R. WOOD SURVEY, ABSTRACT 567
LEVI LEWIS SURVEY NO. 154, ABSTRACT 639
JOHN PITTS SURVEY NO. 471, ABSTRACT 768
WM. WALKER JR. SURVEY NO. 130, ABSTRACT 475
HAYS COUNTY, TEXAS
FEBRUARY 2019

0' 100' 200' 300'
GRAPHIC SCALE
1" = 100'

BEARING BASIS: TEXAS STATE PLANE COORDINATE SYSTEM, SOUTH CENTRAL ZONE, NAD83/CORS

REMAINDER OF 1031.74 ACRES WFC HEADWATERS OWNER VII, L.P. DOC#2014-14000135 O.P.R.H.C.TX

HEADWATERS AT BARTON CREEK PHASE 3 DOC. NO.19021686 O.P.R.H.C.TX

HEADWATERS AT BARTON CREEK PHASE 4, SECTION 3 DOC. NO 19021691 O.P.R.H.C.TX

HEADWATERS AT BARTON CREEK PHASE 2 DOC. NO 19021686 O.P.R.H.C.TX

HEADWATERS AT BARTON CREEK, PHASE 1 VOL. 19, PAGE 16 P.R.H.C.TX

HAZY HILLS LOOP
CRIMSON SKY COURT
DAYBRIDGE DRIVE

WATER QUALITY, TREATMENT, DRAINAGE, MUNICIPAL UTILITY DISTRICT FACILITIES AND ACCESS OVER ROADS OR OTHER NON RESIDENTIAL USES

25' STREAM BUFFER
25' SENSITIVE BUFFER

LOT 143
38.75 ACRES

SHEET 4
SHEET 6
SEE SHEET 2 FOR LINE AND CURVE TABLES

LEGEND

o	½ INCH IRON ROD WITH "DELTA SURVEY" CAP SET (UNLESS NOTED OTHERWISE)
⊙	½ INCH IRON ROD WITH CAP FOUND
♠	60D NAIL IN ROCK MOUND FOUND
◆	ELEVATION BENCH MARK
P.U.E.	PUBLIC UTILITY EASEMENT
R.O.W.	RIGHT OF WAY
O.P.R.H.C.TX.	OFFICIAL PUBLIC RECORDS, HAYS COUNTY, TEXAS
P.R.H.C.TX	PLAT RECORDS, HAYS COUNTY, TEXAS
.....	SIDEWALK

Delta Survey Group Inc.
8213 BRODIE LANE STE. 102 AUSTIN, TX. 78745
OFFICE: (512) 282-5200 FAX: (512) 282-5230
TBPLS FIRM NO. 10004700
PREPARATION DATE: 2/19/19

FINAL PLAT ESTABLISHING HEADWATERS AT BARTON CREEK, PHASE 4, SECTION 5

CITY OF DRIPPING SPINGS ETJ

PHASE 4.5 IC AND PARKLAND TRACKING

HEADWATERS DEVELOPMENT AGREEMENT - IMPERVIOUS COVER SUMMARY

ALLOWABLE IMPERVIOUS COVER

TOTAL AREA[1] = 1569.68 AC.
TOTAL ALLOWABLE IMPERVIOUS COVER (15%)[1] =236.45 AC.

COMMERCIAL AREA[1] = 166.13 AC.
COMMERCIAL ALLOWABLE IMPERVIOUS COVER (60% OF AREA)[2,3] = 83.07 AC.

RESIDENTIAL AREA[1] = 1343.55 AC.
RESIDENTIAL ALLOWABLE IMPERVIOUS COVER[1] =143.38 AC.

NOTES:
1. ACREAGE ON ABOVE TABLE COME FROM THE HEADWATERS AT BARTON CREEK DEVELOPMENT AGREEMENT, DATED JANUARY 11, 2005 RECORDED IN VOLUME 2675, PAGE 649 OF THE OFFICIAL PUBLIC RECORDS OF HAYS COUNTY, TX.
2. IMPERVIOUS COVER CALCULATIONS ARE BASED ON THE REQUIREMENTS OF THE HEADWATERS AT BARTON CREEK DEVELOPMENT AGREEMENT.
3. IMPERVIOUS COVER OF COMMERCIAL TRACT IS ASSUMED TO BE 50% OF COMMERCIAL AREA PER THE HEADWATERS AT BARTON CREEK DEVELOPMENT AGREEMENT.

TOTAL SITE SUMMARY

COMMERCIAL IMPERVIOUS COVER SUMMARY
HEADWATERS COMMERCIAL (ROADWAY IMPROVEMENTS) IMPERVIOUS COVER = 0.79 AC.
HEADWATERS APARTMENTS IMPERVIOUS COVER = 4.82 AC.

TOTAL COMMERCIAL IMPERVIOUS COVER = 5.61 AC.

REMAINING COMMERCIAL IMPERVIOUS COVER =77.46 AC.

RESIDENTIAL IMPERVIOUS COVER SUMMARY
PHASE 1 IMPERVIOUS COVER = 33.08 AC.
PHASE 2 IMPERVIOUS COVER = 28.97 AC.
PHASE 4 SECTION 1 IMPERVIOUS COVER = 3.08 AC.
PHASE 4 SECTION 5 IMPERVIOUS COVER = 3.03 AC.

TOTAL RESIDENTIAL IMPERVIOUS COVER = 68.16 AC.

REMAINING RESIDENTIAL IMPERVIOUS COVER = 75.22 AC.

AVERAGE RESIDENTIAL LOT SIZE = 8,693 SF

NOTES:
1. IMPERVIOUS COVER OF "HEADWATERS COMMERCIAL (ROADWAY IMPROVEMENTS)" CALCULATED BY ADDING THE IMPERVIOUS COVER FROM DRAINAGE AREAS DA 2 AND DA 7 OF THE DEVELOPED DRAINAGE AREA MAP FROM THE ENGINEERING PLANS FOR HEADWATERS COMMERCIAL, ISSUED BY AUSTIN CIVIL ENGINEERING, INC., SEALED BY HUNTER SHADBURNE, P.E., DATED 6/18/18. IMPERVIOUS COVER OF FUTURE DEVELOPMENT AREAS TO BE INCLUDED AT THE TIME OF FINAL PLAT.
2. IMPERVIOUS COVER OF "HEADWATERS APARTMENTS" FROM THE APPROVED SITE PLANS FOR HEADWATERS APARTMENTS, ISSUED BY AUSTIN CIVIL ENGINEERING, INC., SEALED BY HUNTER SHADBURNE, P.E. DATED 07/09/18.
3. IMPERVIOUS COVER OF "PHASE 1" OF THE HEADWATERS AT BARTON CREEK SUBDIVISION FROM RECORD DRAWINGS FOR THE PHASE 1 OF HEADWATERS AT BARTON CREEK SUBDIVISION, ISSUED BY DOUCET & ASSOCIATES, INC., SEALED BY JAMES BREWER, P.E. DATED 03/16/15.
4. AVERAGE RESIDENTIAL LOT SIZE OF "PHASE 1" FROM THE RECORDED FINAL PLAT, HEADWATERS AT BARTON CREEK, PHASE 1, ISSUED BY DOUCET & ASSOCIATES, INC., SEALED BY SYDNEY XINOS, R.P.L.S. DATED 03/08/16.

AGENDA ITEM REQUEST FORM: J. 1.

Hays County Commissioners Court

Date: 03/26/2024

Requested By: Mike Jones

Sponsor: Judge Becerra

Agenda Item

Discussion and possible action to approve the appointment of Stephen Seddig as Hays County Fire Marshal, with a salary exception up to step 9 effective March 26, 2024; and approve the official bond pursuant to Sections 352.011 and 352.012 of the Texas Local Government Code. **BECERRA/MIKE JONES**

Summary

AGENDA ITEM REQUEST FORM: J. 2.

Hays County Commissioners Court

Date: 03/26/2024

Requested By:

Sponsor: Commissioner Smith

Agenda Item:

Discussion and possible action to authorize the execution of the Hays County American Rescue Plan Recovery Donation Agreement between Hays County and Forever 15 and amend the budget accordingly. **SMITH**

Summary:

Donated funds can be used at the recipient's discretion, with the exception of prohibited expenditures as stated in the agreement.

The donation agreement will be funded from the Pct. 4 revenue loss allocation.

Fiscal Impact:

Amount Requested: $10,000
Line Item Number: 011-763-99-159.5600_041

Budget Office:

Source of Funds: American Rescue Plan Act (ARPA) Fund
Budget Amendment Required Y/N?: Yes
Comments: N/A
($10,000) - Increase Intergovernmental Revenue 011-763-99-159.4301
$10,000 - Increase Project Contributions 011-763-99-159.5600_041

Purchasing Office:

Purchasing Guidelines Followed Y/N?: N/A
Comments:

Auditor's Office

G/L Account Validated Y/N?: Yes
New Revenue Y/N?: Yes, $10,000 in Intergovernmental Revenue from ARPA 2nd tranche
Comments:

Attachments

ARPA Donation Agreement

HAYS COUNTY AMERICAN RESCUE PLAN RECOVERY DONATION AGREEMENT

PLEASE READ THIS ENTIRE AGREEMENT CAREFULLY, CONSULT WITH YOUR COUNSEL AS APPROPRIATE, AND DO NOT SIGN IT IF YOU HAVE ANY QUESTIONS, AS YOUR SIGNATURE BELOW BINDS YOU TO EACH OF THE REPRESENTATIONS AND OBLIGATIONS DETAILED IN THIS AGREEMENT.

This Agreement is entered into by and between Hays County ("Hays County") and the **Forever 15 Project** ("Recipient"), located at 143 Samuel Drive - Unit A, Buda, Texas 78610 on the date below written.

SECTION 1 – FUNDING

The parties acknowledge that funding for this Agreement comes solely as a donation made of a sum not to exceed $10,000 in funds received from Hays County allocation of American Rescue Plan (ARP) State and Local Fiscal Recovery Fund (SLFRF), CSLFRF Assistance Listing Number Hays County ALN 21.027. As such, ARP funding must be administered by Hays County for utilization in accordance with eligible ARP activities. Hays County does not have any obligation or commitment whatsoever (1) to provide Recipient with funds from any other source, or (2) to provide any sum in excess of the amount above set forth allocated hereunder by Hays County. Any public mention of the donation shall acknowledge Hays County as Funder. Printed copies of said acknowledgment shall be provided to Hays County.

SECTION 2 - EXPENDITURES ELIGIBLE FOR DONATION

Donated funds may be used for expenditures at the Recipient's discretion but may not be spent on the following prohibited items:

- To offset a reduction in net tax revenue.
- Deposit into pension funds
- Debt service payments or replenishing financial reserves
- To pay any settlements and/or judgments
- To fund any project that conflicts with the American Rescue Plan Act statute (uses of funds that undermine COVID-19 mitigation practices in line with CDC guidance and recommendations).

SECTION 3 – RECIPIENT REPRESENTATIONS AND OBLIGATIONS

Funds are provided to Recipient to support continued operations of Recipient's current Hays County business/special-purpose unit of local government /non-profit entity (501(c)(3) and 501(c)(19) organizations only).

The use of donated funds for prohibited expenses or investments may result in an action to recover funds misspent, with interest and such costs as may be allowable by law.

Recipient certifies, warrants and represents that Recipient is in full compliance with and not delinquent in payment of any taxation to which Recipient is subject, Recipient is a special-purpose unit of local government or a 501(c)(3) or a 501(c)(19) or is a small business that has no more than five hundred (500) full-time equivalent employees as of May 9, 2023 or is a small business concern as defined in section 3 of the Small Business Act (15 U.S.C. 632), and that Recipient fully qualifies for receipt of federal funds originally disbursed to Hays County.

Recipient will provide and cooperate with any information and documentation requests necessary to evaluate compliance with this Agreement, including, without limitation, applicable Uniform Administrative Requirements, Cost Principles, and Audit Requirements for Federal Awards (2 CFR part 200). Additionally, Recipient will provide and cooperate with any information and documentation requests necessary to support compliance with administration of ARP funding, including reporting requirements contained in subsection (d) of Section 603 of Title VI of the Social Security Act.

By signing below, *Recipient certifies that all of the following statements are true*:

- The business/special-purpose unit of local government /non-profit (501(c)(3) or 501(c)(19) entity only) is located in Hays County and has a valid license or authorization to operate in the State of Texas.
- The Recipient is either:
    - A special-purpose unit of local government
    - A 501(c)(3); or
    - A 501(c)(19); or
    - A small business concern as defined in section 3 of the Small Business Act (15 U.S.C. 632); or
    - A small business that has no more than 500 payroll employees as of Oct 24, 2023.
- Recipient agrees and certifies that the funds will not be spent on prohibited uses as outlined in the "Expenditures Eligible for Donation" section.
- Recipient will return any unused funds to Hays County if the business awarded goes out of business before all of the funds are spent.
- Recipient has not been suspended or debarred in connection with any federal procurement.
- Recipient is not actively pursuing a bankruptcy declaration.
- Recipient does not have any Federal, State or Local Tax Liens.
- Recipient is not any of the following:
    - College or university
    - Library
    - A nonprofit *other than* a 501(c)(3) or (19).

SECTION 4 - NONDISCRIMINATION CLAUSE

During the performance of this Agreement, Recipient covenants and agrees to comply with all federal and state nondiscrimination laws, including but not limited to, 42 U.S.C. 12101 et seq., the Americans with Disabilities Act (ADA).

SECTION 5 – MISCELLANEOUS

A. Compliance with Laws: Recipient covenants and agrees to comply with all existing applicable laws, ordinances, codes, regulations, and lawful orders of local, state and federal governments (including the publicly available terms of the Donation), all as now in effect or hereafter amended.

B. Unilateral Termination: Notwithstanding any other provisions of this Agreement, either party may terminate this Agreement by providing written notice of such termination, specifying the effective date thereof, at least thirty (30) days prior to such date.

C. Survival: The terms, conditions and obligations undertaken by the parties herein that by their sense and context are intended to survive the completion of performance or earlier termination of the Agreement shall so survive. Termination shall not in any event terminate this Agreement with respect to any actions or omissions by Recipient made or taken before such termination.

D. Defense and Indemnity: Recipient agrees to defend, indemnify and hold Hays County, its officers, directors, agents, employees and assigns from and against any and all claims, suits, judgments or orders resulting or alleged to have resulted from this Donation Agreement or Recipient's performance or lack thereof hereunder.

E. No Third-Party Recipient: This Agreement shall not be construed as a third-party Recipient contract, being exclusively between the named parties herein, and is not entered into for the benefit of Recipient's creditors irrespective of status.

F. Dispute Resolution: Except as otherwise provided herein, if a bona fide dispute arises among the parties, their respective chief executives will confer in an effort to negotiate a resolution within ten (10) business days such dispute arises. This effort shall precede any judicial or quasi-judicial action with respect thereto, provided that the failure or refusal of any party to participate in such negotiate shall eliminate tis condition precedent to judicial or quasi-judicial action.

G. Governing Law and Venue. This Agreement shall be construed and enforced in accordance with the laws of the State of Texas, to the jurisdiction of which the parties hereby submit. Venue in any suit arising out of this Agreement shall lie in a District Court in Hays County, Texas, or in the United States District Court—Western District, Austin Division, if applicable.

H. Assignment: Neither this Agreement nor any right or claim hereunder shall be transferred or assigned by Recipient without the prior consent of Hays County which consent may be withheld for any reason deemed sufficient by Hays County.

I. Notices: Notices may be hand delivered or emailed. In each case when delivered, or sent first class US Mail postage prepaid effective three business days after mailing, and in any case to the person and address indicated below or if different, to the address indicated in the last notice provided by the other party.

J. Severability: If any term or condition hereof, or application thereof to any person or circumstance is held invalid, such invalidity shall not affect any other terms, conditions or applications of the Agreement that can be given effect without such term, condition or application, to which end the terms hereof are declared severable.

K. Integration: This Agreement and any exhibits hereto represent the entire agreement between the parties. No other understandings, oral or written in any form, shall be binding upon any party hereto, provided that Recipient's application for the Donation shall remain effective for purposes of inducing the Donation.

L. Public Disclosure: The transaction evidenced by this Agreement is subject to such publicity & public records accessibility as Hays County, or their designees may from time to time determine. This right shall expressly survive termination of this Agreement for any reason. Recipient understands that any assurance in any form to the contrary is unauthorized and void.

All of the above is understood and confirmed as accurate and the Recipient as eligible and agreed to as a condition of accepting the Donation under this Agreement created March 26, 2024 through December 31, 2026.

SECTION 6 – PAYMENT

A. Amount of Donation: The amount to be paid to the Recipient for the provision and administration of Eligible Activities under this Donation Agreement shall be the total budget amount included in the Section 1 of this Donation Agreement, payable as follows: One hundred percent (100%) of the total amount of the donation authorized under this Agreement shall be payable upon execution of this Agreement. Recipient will be required to provide documentation of (a) deposit of funds into the Recipient's bank account, (b) provide support from the general ledger showing expenditures, and (c) provide invoice or payroll support for those expenditures.

B. Vouchers; Voucher Review, Approval and Audit: Payment shall be made to the Recipient as authorized in Section 6 (A) above and shall be expressly contingent upon (i) the Recipient submitting a claim voucher (the "Voucher") in a form satisfactory to the County, that (a) states with reasonable specificity the Eligible Activities performed and the

payment requested as reimbursement for such Eligible Activities, (b) certifies that the Eligible Activities performed and the payment requested are in accordance with the terms of this Agreement, and (c) is accompanied by documentation satisfactory to the County supporting the amount claimed, including, where applicable, a certified payroll statement setting forth the names, positions and salaries paid by the Recipient during the preceding month, and (ii) review, approval and audit of the Voucher by the County Auditor or his or her duly designated representative (the "Auditor").

IN WITNESS WHEREOF, the Parties have caused this Agreement to be executed on the dates written below.

Forever 15 Project
143 Samuel Drive - Unit A
Buda, Texas 78610
Attention: Brandon Dunn

SIGNATURE: _____

DATE: _____

Hays County

Ruben Becerra

Hays County Judge

SIGNATURE: _____

DATE: _____

AGENDA ITEM REQUEST FORM: J. 3.

Hays County Commissioners Court

Date: 03/26/2024

Requested By: Stephanie Hunt

Sponsor: Judge Becerra

Agenda Item

Discussion and possible action to award RFP 2024-P01 Delinquent Justice Court Fines and Fees Collection Services to McCreary Veselka Bragg & Allen P.C. (MVBA) and authorize staff and the District Attorney Civil Division to negotiate a contract. **BECERRA/HUNT**

Summary

On November 7, 2023, the Commissioners Court approved specifications and authorized Purchasing to solicit proposals for RFP 2024-P01 Delinquent Justice Court Fines and Fees Collection Services. Purchasing received four (4) proposals from the following firms:

Linebarger Attorney at Law
McCreary Veselka Bragg & Allen P.C.
Perdue Brandon Fielder Collins & Mott LLP
Sierra Outsourcing Solutions

After evaluation of the proposals, the evaluation committee's recommendation is to pursue negotiations with McCreary Veselka Bragg & Allen P.C.. Upon successful negotiations, a contract will be brought back before court to approve and finalize the contract award.

Attachments

Final Tabulation

RFP 2024-P01 Delinquent Justice Court Fines & Fees Collection Services

Final Tabulation

Firm	Averages	
	Score	Rank
Linebarger Attorney at Law	87	2
McCreary, Veselka, Bragg & Allen P.C	92	1
Perdue Brandon Fielder Collins & Mott	85	3
Sierra Outsourcing Solutions	39	4

AGENDA ITEM REQUEST FORM: J. 4.

Hays County Commissioners Court

Date: 03/26/2024

Requested By: Brett Littlejohn & Lisa Day

Sponsor: Commissioner Ingalsbe

Agenda Item:

Discussion and possible action to authorize the Juvenile Center and Juvenile Probation Department to re-grade all Juvenile Supervision Officer positions (37 slots) Grade 115 to Grade 120; re-grade all Lieutenant positions (8 slots) Grade 119 to Grade 123; and re-grade the Training Coordinator position (1 slot) Grade 118 to Grade 124 effective April 1, 2024. **INGALSBE/LITTLEJOHN**

Summary:

The Juvenile Center & Juvenile Probation Department requests a re-grade for the above positions to address recruitment and retention of Juvenile Supervision Officers that have been an issue for the past ten years and that was not addressed by the MAG study and consequent placement into the new Grade/Step plan. The Juvenile Center currently has 12 vacant Juvenile Supervision Officer positions and is not competitive in the local market. One JSO and one Lieutenant are assigned to the Juvenile Probation Department, with the remaining positions assigned to the Juvenile Detention Center.

This request has been discussed and approved by the Hays County Juvenile Board on January 26, 2024, and the Compensation Committee on March 8, 2024.

Fiscal Impact:

Amount Requested: $418,526 - Annualized
$209,263 - FY24
Line Item Number: 070-685-00] & 001-686-00]

Budget Office:

Source of Funds: Juvenile Detention Center & General Fund
Budget Amendment Required Y/N?: No
Comments: If approved, salary savings due to attrition is available for FY24. Will add $418.5k to the FY25 annual budget.

Purchasing Office:

Purchasing Guidelines Followed Y/N?:
Comments:

Auditor's Office

G/L Account Validated Y/N?: Yes
New Revenue Y/N?: N/A
Comments:

AGENDA ITEM REQUEST FORM: J. 5.

Hays County Commissioners Court

Date: 03/26/2024

Requested By: Mike Jones

Sponsor: Judge Becerra

Agenda Item

Discussion and possible action to execute the Memorandum of Understanding (MOU) between Hays County Office of Emergency Services and the City of San Marcos allowing the city access to WETmap data. **BECERRA/MIKE JONES**

Summary

The County has a contract with Water Earth Technologies (collectively referred to as "WET") to maintain a map ("WETmap") that allows access to rainfall data collected within the County via sensors ("Equipment"). San Marcos has plans to add additional Equipment within San Marcos city limits purchased by San Marcos, which will add further data to the WETmap, necessitating the need for San Marcos to have access to monitor all current and future data from the WETmap from both contributing parties.

Attachments

MOU

MEMORANDUM OF UNDERSTANDING

Parties

This Memorandum of Understanding (hereinafter "MOU") is entered into between The City of San Marcos, hereinafter "San Marcos," whose address is 630 E. Hopkins St., San Marcos, TX 78666, and Hays County, hereinafter "County," whose address is 810 S. Stagecoach Trl, San Marcos, TX.

Purpose

The County has a contract with Water Earth Technologies (collectively referred to as "WET") to maintain a map (to be referred to as "WETmap") that allows access to rainfall data collected within the County via sensors (to be referred to as "Equipment"). San Marcos has plans to add additional Equipment within San Marcos city limits purchased by San Marcos, which will add further data to the WETmap, necessitating the need for San Marcos to have access to monitor all current and future data from the WETmap from both contributing parties.

Authorization.

Employees of San Marcos will have access to the WETmap as it pertains to viewing, adding, and collecting data from the Equipment from both parties. San Marcos may not authorize non-employees access to the WETmap without permission from the County. San Marcos will provide notice as needed to the County of any permanent changes to the Equipment.

County Responsibility.

The County will maintain the contract with WET for the WETmap site. The County will provide San Marcos access to flood monitoring data that is obtained through the collection of data from the Equipment if applicable.

Term

This MOU shall automatically renew annually on the anniversary of the effective date each year, unless notice is provided by either party that the MOU will not be renewed. Either party may terminate this MOU for any reason with seven days' notice to the other party.

THIS AGREEMENT IS HEREBY EXECUTED ON THE _____ DAY OF _____, 2024.

CITY OF SAN MARCOS	HAYS COUNTY
Signature:_____	Signature:_____
Name: _____	Name: _____
Title: _____	Title: _____
Date: _____	Date: _____

AGENDA ITEM REQUEST FORM: J. 6.

Hays County Commissioners Court

Date: 03/26/2024

Requested By: Sheriff Gary Cutler

Sponsor: Commissioner Ingalsbe

Agenda Item:

Discussion and possible action to authorize the acceptance of a grant award from the Texas Comptroller of Public Accounts, Rural Law Enforcement Grant Program for the Sheriff's Office in the amount of $500,000.00 and amend the budget accordingly. **INGALSBE/CUTLER/CRUMLEY**

Summary:

On January 30th, 2024, the Commissioners Court approved the submission of this grant application. Hays County meets all minimum salary requirements for staff in the Sheriffs Office as outlined in Article V, Section 1 of this contract. Therefore, grant funds may be used by the Sheriffs Office to increase salaries; to hire additional deputies or staff; or to purchase vehicles, firearms, and safety equipment. This contract becomes effective upon signature and funds must be expended by September 30, 2024.

Contract Number IA-0000000556
Contract period: 3/26/2024 - 9/30/2024

Fiscal Impact:

Amount Requested: None
Line Item Number: 001-618-99-214]

Budget Office:

Source of Funds: Tx Comptroller Grant Funds
Budget Amendment Required Y/N?: Yes
Comments: Budget approved grant award.

Budget Amendment:		
44,878	Increase LE Supplies	001-618-99-214.5206
69,240	Increase LE Supplies_Ammo	001-618-99-214.5206_010
104,302	Increase LE Eqpt_Ops	001-618-99-214.5717_400
117,980	Increase LE Eqpt_Capital	001-618-99-214.5717_700
163,600	Increase Vehicle_Capital	001-618-99-214.5713_700
(218,420)	Increase Intergov Revenue	001-618-99-214.4301
(281,580)	Increase Intergov Rev_Capital	001-618-99-214.4304

Purchasing Office:

Purchasing Guidelines Followed Y/N?: TBD
Comments: If used for vehicles, firearms and safety equipment, purchase according to the purchasing policy

Auditor's Office

G/L Account Validated Y/N?: Yes
New Revenue Y/N?: Yes, $500,000 in Intergovernmental Revenues
Comments:

Attachments

Contract
SO LE Rural Grant Itemized Budget

DocuSign Envelope ID: E5F7ABF6-D18E-4CFC-A530-21354F7793E9

GRANT AGREEMENT
For The
Rural Law Enforcement Salary Assistance Program
Award # IA-0000000556

This grant agreement ("Agreement") is entered into by and between the Texas Comptroller of Public Accounts ("Comptroller") and Hays ("Grantee") located at 712 S. Stagecoach Trail San Marcos Texas 78666. For purposes of this Agreement, Comptroller and Grantee are sometimes collectively referred to as the "Parties" or individually as a "Party."

Article I. Recitals

Whereas, the 88th Texas Legislature passed Senate Bill 22 (S.B. 22) to establish a grant program to provide financial assistance to qualified sheriff's offices, constable's offices, and prosecutor's offices in rural counties (the "Program");

Whereas, Comptroller has authority to implement and administer the Program and award grants to eligible applicants pursuant to Local Government Code, Chapter 130, Subchapter Z, Sections 130.911, 130.912, and 130.913;

Whereas, Grantee warrants that it is eligible to participate in the Program;

Whereas, Grantee certifies that it has not and will not reduce the amount of funds provided to its sheriff's office, constable's office or prosecutor's office, as applicable, because of an award of grant funds under this Agreement;

Whereas, Grantee timely submitted an application for a grant;

Whereas, Comptroller has reviewed and approved Grantee's application for a grant;

Whereas, the Parties desire to set forth their mutual expectations and obligations for participation in the Program; and

Now, therefore, in consideration of Grantee's compliance with all requirements of this Agreement, Comptroller awards this Agreement to the Grantee and the Parties do hereby represent, covenant, and agree as follows:

Article II. Authority

This Agreement is entered into pursuant to the authority granted and in compliance with the provisions of Local Government Code, Sections 130.911, 130.912, or 130.913, as applicable. This Agreement is funded by state funds appropriated by the State Legislature.

Article III. Grant

In consideration of the various obligations to be undertaken by Grantee, Comptroller awards Grantee the amount of $500000.00 , to be disbursed to Grantee for the purposes of funding a [Rural Sheriff's Office Salary Assistance Grant, Rural Constable's Office Salary Assistance Grant, or Rural Prosecutor's Office Salary Assistance Grant], subject to the following:

1. Grantee shall use grant funds only for the authorized uses set forth in Article V of this Agreement, and only for the _____

as indicated on the Grantee's application.

2. Grantee shall fully comply with all terms and conditions of this Agreement; the requirements of Local Government Code, §§ 130.911, 130.912, or 130.913, as applicable; the relevant provisions of the Texas Grant Management Standards (TxGMS) and the State of Texas Procurement and Contract Management Guide, or their successors, adopted in accordance with Texas law; and all applicable state or federal statutes, rules, regulations, or guidance applicable to the grant award, including 34 Texas Administrative Code (TAC), Part I, Chapter 16, Subchapter D.
3. Grantee specifically assures compliance with the provisions of Appendix 6 of TxGMS (Uniform Assurances by Local Governments) that are applicable to this Grant.

Article IV. Term

This Agreement is effective from the date signed by Comptroller ("Effective Date"), after first having been signed by Grantee, to and including an expiration date of September 30, 2024, unless terminated earlier in accordance with other provisions of this Agreement.

Article V. Authorized Uses of Grant Funds; Limitations

Section 1 of this Article applies only to a Rural Sheriff's Office Salary Assistance Grant, Section 2 of this Article applies only to a Rural Constable's Office Salary Assistance Grant, Section 3 of this Article applies only to a Rural Prosecutor's Office Salary Assistance Grant, and Section 4 of this Article applies to all grants except as otherwise set out in Section 4.

Section 1. Rural Sheriff's Office Salary Assistance Grant (Local Government Code, § 130.911)

A. **Authorized Uses.** Grantee may only use grant funds to cover the following costs:

1. to provide a minimum annual salary of at least:
   a. $75,000 for the county sheriff (as defined by 34 TAC §16.300(3));
   b. $45,000 for each deputy sheriff (as defined by 34 TAC §16.300(4)) who performs motor vehicle stops in the routine performance of their duties; and
   c. $40,000 for each jailer (as defined by 34 TAC §16.300(2)) whose duties include the safekeeping of prisoners and the security of a jail operated by the county; and
2. provided that each county sheriff that meets the definition in 34 TAC § 16.300(3), and each deputy sheriff that meets the definition in 34 TAC §16.300(4), and county jailer that meets the definition in 34 TAC §16.300(2) that is employed by the county sheriff receives the minimum salary described by paragraph (1) of this section:
   a. to increase the salary of a person described by paragraph (1) of this section;
   b. to hire additional deputies or staff for the sheriff's office; or
   c. to purchase vehicles, firearms, and safety equipment (as defined by 34 TAC §§ 16.300(13) and 16.300(14)) for the sheriff's office.

B. **Deficient Grant Funds.** If Grantee does not have sufficient grant funding to fund the minimum annual salaries required by this Section 1, Grantee may use grant funds to increase the salaries of the persons described in this Section 1 on a pro-rata basis.

Section 2. Rural Constable's Office Salary Assistance Grant (Local Government Code, § 130.912)

A. **Authorized Uses.** Grantee may only use grant funds as follows:

1. to provide a minimum annual salary of $45,000 to a qualified constable (as defined by 34 TAC § 16.300(10)); and
2. for each qualified constable whose salary is funded in part by the Grant, Grantee must contribute at least 75% of the money required to meet the minimum annual salary requirement.

B. **Contribution for Fiscal Year Beginning October 1, 2023.** If Grantee's fiscal year began October 1, 2023, Grantee's contribution shall include county funds used to pay an annual minimum salary from October 1, 2023 through the end of the grant agreement awarded for Fiscal Year 2024.

Section 3. Rural Prosecutor's Office Salary Assistance Grant (Local Government Code, § 130.913)

A. **Authorized Uses.** Grantee may only use grant funds to cover the following costs:

1. to increase the salary of an assistant attorney, an investigator, or a victim assistance coordinator (as defined by 34 TAC §16.300(14) employed at the prosecutor's office; or
2. to hire additional staff for the prosecutor's office.

Section 4. Additional Terms

A. **Nonmonetary Benefits and Taxes.** A minimum annual salary as described in Sections 1 and 2 of this Article does not include any overtime compensation. A salary increase includes increases required to bring a salary to the minimum annual salary as described by Sections 1 and 2 of this Article, and salary increases described by Sections 1 and 3 of this Article, and will be measured based on the salary provided on the last day of the entity's fiscal year ending in 2023, excluding any overtime. The cost of a salary increase as described in this Article includes the increase of legally required nonmonetary benefits and taxes for that salary. A salary increase does not include overtime and the cost of a salary increase does not include an increase of legally required nonmonetary benefits and taxes for overtime compensation. Grantee may only use grant funds for the legally required nonmonetary benefits and taxes for a salary if Grantee provides the minimum annual salary required by Sections 1 and 2 of this Article, if applicable. Grantee may not reduce a salary below a minimum salary required by Sections 1 and 2 of this Article to use grant funds for legally required nonmonetary benefits and taxes for that salary.

B. **Minimum Hourly Wage Calculation.** If a person described in Sections 1 or 2 of this Article is a part-time or hourly employee, or holds a dual office or otherwise divides work hours between a position described in this Article and another position, the minimum annual salary required by Sections 1 or 2 of this Article may be converted to a minimum hourly wage and will apply only to the hours of work performed for a position described in this Article as follows:

1. for an employee with a 40-hour work week, the minimum hourly wage shall be the product of:
   a. the minimum annual salary described in this Article; and
   b. a quotient:
      i. the numerator of which is equal to the number of hours the employee normally works performing duties for a position described in this Article each week, not to exceed 40; and
      ii. the denominator of which is equal to 40; and
2. for an employee with a county adopted work period as authorized by Section 7(k), Fair Labor Standards Act, 29 U.S.C.A § 207(k), the minimum hourly wage shall be the product of:
   a. the minimum annual salary described in this Article; and

b. a quotient:

i. the numerator of which is equal to the number of hours the employee normally works performing duties for a position described in this Article each period, not to exceed the number of hours that are nonovertime as determined under the Fair Labor Standards Act; and

ii. the denominator of which is equal to the number of hours that are nonovertime as determined under the Fair Labor Standards Act.

C. A person whose salary increase may be paid with grant funds under Sections 1 and 3 of this Article may be paid an increase in hourly wages if they are paid an hourly wage rather than an annual salary.

D. **Expenditure of Grant Funds.** Subject to Article VI, Section D of this Agreement, Grantee shall expend the funds during the grant period. Funds for purchases are considered expended when Grantee is legally obligated to expend the funds.

Article VI. Reimbursement

A. **Advance Payment.** Comptroller shall disburse the grant funds as soon as practicable following the Effective Date. By making advance payment, Comptroller does not waive any requirements for the reimbursement of costs. Upon Comptroller's request, Grantee shall submit records in support of reimbursement requests.

B. **Deposit of Funds**. Whenever possible, grant funds must be deposited and maintained in insured, interest-bearing accounts. Interest earned on grant funds is not considered program income, and Grantee must use any accrued interest for grant purposes only and on allowable costs under this Agreement.

C. **Eligibility for Cost Reimbursement.** Comptroller will reimburse Grantee for necessary and reasonable allowable costs paid by Grantee in performance of this Agreement. Allowable costs are restricted to costs that comply with the Agreement, TxGMS, and state law. The parties agree that all the requirements of TxGMS apply to this Agreement, including the criteria for allowable costs.

D. **Pre-award Costs.** Comptroller will reimburse Grantee for pre-award costs provided (a) the costs are incurred during the portion of Grantee's fiscal year in which this grant period occurs that precedes the date of award, if any, and (b) the costs would have been allowable under the terms of this Agreement if incurred during the grant period.

Article VII. Reporting and Compliance

A. **Compliance Reports**. Grantee shall submit a compliance report certifying compliance and detailing expenditures of grant funds using Comptroller's electronic form no later than 30 days following the expiration or termination of this Agreement. Comptroller may request supporting documentation regarding expenditures and any other information required to substantiate that grant funds are being used for the intended purpose and that Grantee has complied with the terms, conditions, and requirements of the applicable statute, the Agreement and 34 Texas Administrative Code, Chapter 16, Subchapter D. Grantee shall submit any information requested by Comptroller within fourteen (14) calendar days of the request.

B. **Remedies for Non-Compliance**. If Comptroller finds that Grantee has failed to comply with terms and conditions of this Agreement or any other requirement described in Article III, Section 2 of this Agreement, Comptroller may:

1. require Grantee to return the grant funds or a portion of the grant funds;

2. withhold grant funds from the current grant or future grants to be received by Grantee pending correction of the deficiency;
3. disallow all or part of the cost of the activity or action that is not in compliance;
4. terminate the Agreement in whole or in part;
5. bar Grantee from future consideration for grant funds under 34 Texas Administrative Code, Chapter 16, Subchapter D; or
6. exercise any other legal remedies available to Comptroller under this Agreement, at law, in equity, or otherwise.

Article VIII. General

A. **Audit Requirements.** Funds allocated in connection with this Agreement are considered to be state financial assistance for the purpose of determining the audit requirements under the Texas Grant Management Standards. If an audit is required to comply with the requirements of Texas Grant Management Standards, Grantee shall complete an audit at the end of Grantee's fiscal year. Grantee agrees that in the event of any audit findings related to state awards provided by Comptroller, Grantee will inform Comptroller within two (2) business days following Grantee's receipt of any written audit findings or reports (whether in draft or final form), and thereafter submit any documentation related to the audit findings upon Comptroller's request (including, but not limited to, a copy of the final audit report, a response to the current status of the prior year's questioned costs, copies of management letters written as a result of the audit, and action plans, if any).

B. **Texas Public Information Act.** Comptroller is bound by the provisions of the Texas Public Information Act ("TPIA"), Chapter 552, Texas Government Code. Information, documentation, and other material in connection with this Agreement may be subject to public disclosure pursuant to the TPIA. If Grantee receives a request for information related to this Agreement from a third party, Grantee shall forward the request to Comptroller within three (3) days of receipt.

C. **Records; Right to Audit.** Grantee acknowledges that acceptance of funds under this Agreement acts as acceptance of the authority of the State Auditor (or any successor agency), under the direction of the legislative audit committee, to conduct an audit or investigation in connection with those funds. Under the direction of the legislative audit committee, Grantee or other entity that is the subject of an audit or investigation by the state auditor shall provide the state auditor with access to any information the state auditor considers relevant to the investigation or audit. Comptroller further reserves the right to monitor and audit Grantee's compliance with the requirements of this Agreement.

D. **Funding Limitation.** The Agreement shall not be construed as creating a debt on behalf of Comptroller in violation of Article III, Section 49a of the Texas Constitution. All obligations of Comptroller under the Agreement are subject to the availability of grant funds. The Agreement is subject to termination or cancellation, either in whole or in part, without penalty to Comptroller if such funds are not appropriated or become unavailable.

E. **Records Retention.** Grantee shall maintain and retain all records relating to the performance of the Agreement, including supporting fiscal documents adequate to ensure that claims for grant funds are in accordance with applicable State of Texas requirements. These records will be maintained and retained by Grantee for a period of five (5) years after the Agreement expiration date or until all audit, claim, and litigation matters are resolved, whichever is later. Comptroller reserves the right to direct grantee to retain documents for a longer period of time or transfer certain records to Comptroller custody when it is determined the records possess longer term retention value.

F. **NO INDEMNIFICATION. THE PARTIES AGREE THAT COMPTROLLER WILL NOT INDEMNIFY GRANTEE FOR ANY LIABILITY, ACTIONS, CLAIMS, DEMANDS, OR**

SUITS, OR ANY RELATED COSTS, ATTORNEY FEES, OR EXPENSES ARISING OUT OF OR RESULTING FROM ANY ACTS OR OMISSIONS OF GRANTEE IN PERFORMANCE OF THE AGREEMENT.

G. **Limitations on Grants.** Grantee acknowledges and agrees that funds received under this Agreement will be expended subject to the limitations and reporting requirements similar to those provided by the following: Parts 2 and 3 of the Texas General Appropriations Act, Art. IX, except there is no requirement for increased salaries for local government employees; Sections 556.004, 556.005, and 556.006 of the Texas Government Code; and Sections 2113.012 and 2113.101 of the Texas Government Code.

H. **Law Enforcement Agency Grant Restriction.** If Grantee is a law enforcement agency regulated by Chapter 1701 of the Texas Occupations Code, Grantee represents and warrants that it will not use appropriated money unless the law enforcement agency is in compliance with all rules adopted by the Texas Commission on Law Enforcement, or the Texas Commission on Law Enforcement certifies that it is in the process of achieving compliance with such rules.

I. **Force Majeure.** Neither Party shall be liable to the other for any delay in, or failure of performance, of any requirement included in this Agreement caused by force majeure. The existence of such causes of delay or failure shall extend the period of performance until after the causes of delay or failure have been removed provided the non-performing Party exercises all reasonable due diligence to perform. Force majeure is defined as acts of God, war, fires, explosions, hurricanes, floods, failure of transportation, pandemic/quarantine orders or other causes that are beyond the reasonable control of either Party and that by exercise of due foresight such Party could not reasonably have been expected to avoid, and which, by the exercise of all reasonable due diligence, such Party is unable to overcome.

J. **Independent Contractor.** The Parties agree that each Party is contracting as an independent contractor.

K. **Assignment.** No assignment of this Agreement or of any right accruing hereunder shall be made, in whole or part, by either Party without the prior written consent of the other.

L. **Headings.** The headings contained in this Agreement are for reference purposes only and shall not in any way affect the meaning or interpretation of the Agreement.

M. **No Waiver.** This Agreement shall not constitute or be construed as a waiver of any of the privileges, rights, defenses, remedies, or immunities available to either Party as an agency of the State of Texas or otherwise available to the Party. The failure to enforce or any delay in the enforcement of any privileges, rights, defenses, remedies, or immunities available to a Party under this Agreement or under applicable law shall not constitute a waiver of such privileges, rights, defenses, remedies, or immunities or be considered as a basis for estoppel.

N. **Survival.** The expiration or termination of this Agreement shall not affect the rights and obligations of the Parties accrued prior to the effective date of expiration or termination and such rights and obligations shall survive and remain enforceable.

O. **Severability.** If one or more provisions are deemed invalid, illegal, or unenforceable for any reason, such invalidity, illegality or unenforceability shall not affect any other provision and this Agreement shall be construed as if the invalid, illegal or unenforceable provision had never been contained herein.

P. **Governing Law.** This Agreement is governed by and construed under and in accordance with the laws of the State of Texas.

Article IX. Notices; Liaison

Any notice relating to this Agreement, which is required or permitted to be given under this Agreement by one party to the other party shall be in writing and shall be addressed to the receiving party at the address

specified below. The notice shall be deemed to have been given immediately if delivered in person to the recipient's address specified below. It shall be deemed to have been given on the date of certified receipt if placed in the United States mail, postage prepaid, by registered or certified mail with return receipt requested, addressed to the receiving party at the address specified below. Registered or certified mail with return receipt is not required for copies.

The address of Comptroller for all purposes under this Agreement and for all notices hereunder shall be:

Comptroller: Texas Comptroller of Public Accounts
ATTN: Contracts Section
111 E 17th Street, Room 310C
Austin, Texas 78774
With copy sent via electronic mail to contracts@cpa.texas.gov

The address of Grantee for all purposes under this Agreement and for all notices hereunder shall be:

Grantee: Hays
712 S. Stagecoach Trail San Marcos Texas 78666

Contact Person: Ruben Becerra
County Judge
judge.becerra@co.hays.tx.us
5123932205

Article X. Signatories

IN WITNESS WHEREOF, the Parties have caused this Agreement to be executed by their undersigned, duly authorized representatives. This Agreement may be executed in one or more counterparts, each of which is an original, and all of which constitute only one agreement between the Parties.

Texas Comptroller of Public Accounts

BY_____

Lisa Craven
Deputy Comptroller

DATE _____

Hays

BY_____

Ruben Becerra
County Judge

DATE _____

DocuSign Envelope ID: E5F7ABF6-D18E-4CFC-A530-21354F7793E9

DocuSign Envelope ID: E5F7ABF6-D18E-4CFC-A530-21354F7793E9

DocuSign

Certificate Of Completion

Envelope Id: E5F7ABF6D18E4CFCA53021354F7793E9
Status: Sent
Subject: Rural Law Enforcement Grant Agreement
Source Envelope:
Document Pages: 9
Signatures: 0
Envelope Originator:
Certificate Pages: 4
Initials: 0
Heather Hampton
AutoNav: Enabled
Heather.Hampton@cpa.texas.gov
EnvelopeId Stamping: Enabled
IP Address: 52.61.135.34
Time Zone: (UTC-08:00) Pacific Time (US & Canada)

Record Tracking

Status: Original
3/1/2024 3:09:57 PM
Holder: Heather Hampton
Heather.Hampton@cpa.texas.gov
Location: DocuSign
Security Appliance Status: Connected
Pool: FedRamp
Storage Appliance Status: Connected
Pool: Salesforce-PROD
Location: DocuSign

Signer Events	Signature	Timestamp
Ruben Becerra judge.becerra@co.hays.tx.us Security Level: Email, Account Authentication (None) **Electronic Record and Signature Disclosure:** Accepted: 3/6/2024 3:42:41 PM ID: 9240cc3c-aa96-4952-83f0-ac3186cba795		Sent: 3/1/2024 3:10:24 PM Viewed: 3/6/2024 3:42:41 PM
Lisa Craven lisa.craven@cpa.texas.gov Security Level: Email, Account Authentication (None) **Electronic Record and Signature Disclosure:** Accepted: 2/26/2024 10:14:36 AM ID: d0daaa94-1252-47fe-afac-dfed056dfa5a		

In Person Signer Events	Signature	Timestamp

Editor Delivery Events	Status	Timestamp

Agent Delivery Events	Status	Timestamp

Intermediary Delivery Events	Status	Timestamp

Certified Delivery Events	Status	Timestamp

Carbon Copy Events	Status	Timestamp

Witness Events	Signature	Timestamp

Notary Events	Signature	Timestamp

Envelope Summary Events	Status	Timestamps
Envelope Sent	Hashed/Encrypted	3/1/2024 3:10:24 PM

Payment Events	Status	Timestamps

Electronic Record and Signature Disclosure

ELECTRONIC RECORD AND SIGNATURE DISCLOSURE

From time to time, Salesforce-PROD (we, us or Company) may be required by law to provide to you certain written notices or disclosures. Described below are the terms and conditions for providing to you such notices and disclosures electronically through the DocuSign system. Please read the information below carefully and thoroughly, and if you can access this information electronically to your satisfaction and agree to this Electronic Record and Signature Disclosure (ERSD), please confirm your agreement by selecting the check-box next to 'I agree to use electronic records and signatures' before clicking 'CONTINUE' within the DocuSign system.

Getting paper copies

At any time, you may request from us a paper copy of any record provided or made available electronically to you by us. You will have the ability to download and print documents we send to you through the DocuSign system during and immediately after the signing session and, if you elect to create a DocuSign account, you may access the documents for a limited period of time (usually 30 days) after such documents are first sent to you. After such time, if you wish for us to send you paper copies of any such documents from our office to you, you will be charged a $0.00 per-page fee. You may request delivery of such paper copies from us by following the procedure described below.

Withdrawing your consent

If you decide to receive notices and disclosures from us electronically, you may at any time change your mind and tell us that thereafter you want to receive required notices and disclosures only in paper format. How you must inform us of your decision to receive future notices and disclosure in paper format and withdraw your consent to receive notices and disclosures electronically is described below.

Consequences of changing your mind

If you elect to receive required notices and disclosures only in paper format, it will slow the speed at which we can complete certain steps in transactions with you and delivering services to you because we will need first to send the required notices or disclosures to you in paper format, and then wait until we receive back from you your acknowledgment of your receipt of such paper notices or disclosures. Further, you will no longer be able to use the DocuSign system to receive required notices and consents electronically from us or to sign electronically documents from us.

All notices and disclosures will be sent to you electronically

Unless you tell us otherwise in accordance with the procedures described herein, we will provide electronically to you through the DocuSign system all required notices, disclosures, authorizations, acknowledgements, and other documents that are required to be provided or made available to you during the course of our relationship with you. To reduce the chance of you inadvertently not receiving any notice or disclosure, we prefer to provide all of the required notices and disclosures to you by the same method and to the same address that you have given us. Thus, you can receive all the disclosures and notices electronically or in paper format through the paper mail delivery system. If you do not agree with this process, please let us know as described below. Please also see the paragraph immediately above that describes the consequences of your electing not to receive delivery of the notices and disclosures electronically from us.

How to contact Salesforce-PROD:

You may contact us to let us know of your changes as to how we may contact you electronically, to request paper copies of certain information from us, and to withdraw your prior consent to receive notices and disclosures electronically as follows:
To contact us by email send messages to: kaite.guerrero@cpa.texas.gov

To advise Salesforce-PROD of your new email address

To let us know of a change in your email address where we should send notices and disclosures electronically to you, you must send an email message to us at kaite.guerrero@cpa.texas.gov and in the body of such request you must state: your previous email address, your new email address. We do not require any other information from you to change your email address.

If you created a DocuSign account, you may update it with your new email address through your account preferences.

To request paper copies from Salesforce-PROD

To request delivery from us of paper copies of the notices and disclosures previously provided by us to you electronically, you must send us an email to kaite.guerrero@cpa.texas.gov and in the body of such request you must state your email address, full name, mailing address, and telephone number. We will bill you for any fees at that time, if any.

To withdraw your consent with Salesforce-PROD

To inform us that you no longer wish to receive future notices and disclosures in electronic format you may:

i. decline to sign a document from within your signing session, and on the subsequent page, select the check-box indicating you wish to withdraw your consent, or you may;

ii. send us an email to kaite.guerrero@cpa.texas.gov and in the body of such request you must state your email, full name, mailing address, and telephone number. We do not need any other information from you to withdraw consent.. The consequences of your withdrawing consent for online documents will be that transactions may take a longer time to process..

Required hardware and software

The minimum system requirements for using the DocuSign system may change over time. The current system requirements are found here: https://support.docusign.com/guides/signer-guide-signing-system-requirements.

Acknowledging your access and consent to receive and sign documents electronically

To confirm to us that you can access this information electronically, which will be similar to other electronic notices and disclosures that we will provide to you, please confirm that you have read this ERSD, and (i) that you are able to print on paper or electronically save this ERSD for your future reference and access; or (ii) that you are able to email this ERSD to an email address where you will be able to print on paper or save it for your future reference and access. Further, if you consent to receiving notices and disclosures exclusively in electronic format as described herein, then select the check-box next to 'I agree to use electronic records and signatures' before clicking 'CONTINUE' within the DocuSign system.

By selecting the check-box next to 'I agree to use electronic records and signatures', you confirm that:

- You can access and read this Electronic Record and Signature Disclosure; and
- You can print on paper this Electronic Record and Signature Disclosure, or save or send this Electronic Record and Disclosure to a location where you can print it, for future reference and access; and
- Until or unless you notify Salesforce-PROD as described above, you consent to receive exclusively through electronic means all notices, disclosures, authorizations, acknowledgements, and other documents that are required to be provided or made available to you by Salesforce-PROD during the course of your relationship with Salesforce-PROD.

SHERIFF'S OFFICE - LE RURAL GRANT BUDGET

ITEM	UNIT COST	QTY	TOTAL	G/L ACCT
Law Enforcement Supplies				
Leatherhead Halligan and Sledge Combo	$ 340	56	$ 19,040	.5206
MIRA Safety CM-7M Gas Mask	$ 276	56	$ 15,456	.5206
Stream Light ProTac 2.0	$ 172	30	$ 5,160	.5206
Law Enforcement Equipment				
Wilcox Mount	$ 729	20	$ 14,580	.5717_400
Shellback Tactical Helmet/Highcut	$ 870	56	$ 48,720	.5717_400
Saint Victor 5.56 Rifle	$ 1,150	30	$ 34,500	.5717_400
Armasight BNVD-51 1x19mm Bravo Gen 3 IIT, Dual Channel Night Vision Binoculars	$ 5,899	20	$ 117,980	.5717_700
Law Enforcement Vehicles				
F-150XL Trucks	$ 37,000	1	$ 37,000	.5713_700
Law Enforcement Training Ammunition				
9mm	$ 220	70	$ 15,400	.5206_010
40 cal	$ 292	14	$ 4,088	.5206_010
223 fmj	$ 375	43	$ 16,125	.5206_010
Law Enforcement Duty Ammunition				
9mm	$ 492	14	$ 6,888	.5206_010
40 cal	$ 591	5	$ 2,955	.5206_010
223 sp	$ 915	14	$ 12,810	.5206_010
Corrections Training Ammunition				
9mm	$ 220	28	$ 6,160	.5206_010
40 cal	$ 293	4	$ 1,172	.5206_010
Corrections Duty Ammunition				
9mm	$ 492	5	$ 2,460	.5206_010
40 cal	$ 591	2	$ 1,182	.5206_010
Jail Supplies				
Handcuffs	$ 23	20	$ 460	.5206
Oversize Handcuffs	$ 42	5	$ 210	.5206
Oversize Leg Irons	$ 98	4	$ 392	.5206
Waist Chains	$ 20	2	$ 40	.5206
Jail Sert Supplies				
Ear Protection	$ 60	26	$ 1,560	.5206
Shotgun Forend	$ 30	3	$ 90	.5206
Shotgun Stock	$ 115	2	$ 230	.5206
Shotgun Side Saddle	$ 74	3	$ 222	.5206
Pelican Case	$ 210	2	$ 420	.5206
Less Lethal Laser sights	$ 49	6	$ 294	.5206
Mobile Video Camera Mounts	$ 72	12	$ 864	.5206
Tactical Medical Kits	$ 44	10	$ 440	.5206
Jail Sert Equipment				
Voice Amplifiers	$ 520	4	$ 2,080	.5717_400
Mobile Equipment Cart	$ 1,582	1	$ 1,582	.5717_400
Ballistic Shield	$ 2,840	1	$ 2,840	.5717_400
Jail Vehicles				
F-150XL Trucks	$ 37,000	1	$ 37,000	.5713_700
Ford Interceptor	$ 48,600	1	$ 48,600	.5713_700
GM Passenger Van Express	$ 41,000	1	$ 41,000	.5713_700
TOTAL GRANT AWARD			**$ 500,000**	

AGENDA ITEM REQUEST FORM: J. 7.

Hays County Commissioners Court

Date: 03/26/2024

Requested By: Kelly Higgins, District Attorney

Sponsor: Commissioner Ingalsbe

Agenda Item:

Discussion and possible action to authorize the acceptance of a grant award from the Texas Comptroller of Public Accounts, Rural Law Enforcement Grant Program for the District Attorney's Office in the amount of $275,000.00; establishing one (1) new Chief Attorney VII position and amend the budget accordingly. **INGALSBE/HIGGINS**

Summary:

On January 24th, the Commissioners Court ratified the submission of a grant application for the District Attorney's Office to apply for funding under the Senate Bill (SB) 22 Rural Law Enforcement grant program. The District Attorney has received notification of award and will utilize the funds to establish one new Attorney VII position to lead a Special Victim's Unit, and to supplement Victim's Assistance Coordinator's and Investigator's salaries as authorized per the grant guidelines.

This grant will allow for the establishment of a Special Victim's Unit that will focus on high-risk domestic violence cases, child abuse and sexual assault cases. The Chief Prosecutor will work with law enforcement to improve the early-stage investigations and perform all intake of these cases including grand jury presentations. Additionally, salary stipends for VACS and Investigators will be utilized for recruitment and retention to help maintain continuity with these specialized functions for a successful Special Victim's Unit.

Grant Award # IA-0000000336
Grant Period: 3/26/24 - 9/30/24

Fiscal Impact:

Amount Requested: None
Line Item Number: 001-607-99-213]

Budget Office:

Source of Funds: Tx Comptroller Grant Funds
Budget Amendment Required Y/N?: Yes
Comments: Budget approved grant award.

Budget Amendment:		
216,434	Increase Staff Salaries	001-607-99-213.5021
13,418	Increase FICA	001-607-99-213.5101_100
3,137	Increase Medicare	001-607-99-213.5101_200
29,780	Increase Retirement	001-607-99-213.5101_300
11,760	Increase Medical Ins	001-607-99-213.5160_400
405	Increase Dental Ins	001-607-99-213.5160_500
66	Increase Life Ins	001-607-99-213.5160_600
(275,000)	Increase Intergov Revenue	001-607-99-213.4031

Purchasing Office:

Purchasing Guidelines Followed Y/N?: N/A
Comments:

Auditor's Office

G/L Account Validated Y/N?: Yes
New Revenue Y/N?: Yes, $275,000 in Intergovernmental Revenues
Comments:

Attachments

DA LE Rural Grant Agreement
DA LE Rural Grant Itemized Budget

DA Rural LE Grant Budget

New Position:		
1 Attorney VII	129,208	
Fringe	27,663	
Insurances	12,231	
Total	169,102	
Salary Supplements:		
10 VAC's	75,000	($7,500 annually)
9 Investigators	12,226	($1,358.40 annually)
Total Supplement	87,226	
Fringe	18,672	
Total	105,898	
Total Grant Award	275,000	

AGENDA ITEM REQUEST FORM: J. 8.

Hays County Commissioners Court

Date: 03/26/2024

Requested By: Marcus Pacheco

Sponsor: Commissioner Shell

Agenda Item

Discussion and possible action to approve the 9-1-1 Addressing and Street Name Interlocal Agreement (ILA) between Hays County and the City of Wimberley. **SHELL/PACHECO**

Summary

Discussion and possible action to approve the 9-1-1 Addressing and Street Name Interlocal Agreement (ILA) between Hays County and the City of Wimberley. Hays County recently updated the 9-1-1 Addressing and Street Name Standards and has been working with the City to update our ILA. The current ILA was last updated in 2011.

Attachments

Wimberley 9-1-1 ILA

INTERLOCAL AGREEMENT BETWEEN HAYS COUNTY, TEXAS AND THE CITY OF WIMBERLEY, TEXAS REGARDING 9-1-1 ADDRESSING AND STREET NAME SERVICES

This Interlocal Agreement (the "'ILA") regarding 9-1-1 addressing and street name services is made on the last date entered below between the City of Wimberley, a Texas general law municipality (the "City"), and the County of Hays, a political subdivision of the State of Texas (the "County"), collectively referred to hereinafter as "the Parties." This ILA is for 9-1-1 addressing and street name services for the area within the boundary of the City, which are located within the boundary of Hays County.

WHEREAS, the Commissioners Court of the County (the "Court") and the City Council of the City (the "Council") have each found that contracting for and with respect to the governmental services hereinafter described will result in increased efficiency and economy to the citizens of each such governmental entity; and

WHEREAS, both the County and the City desire to enter into an Interlocal Agreement pursuant to the Interlocal Cooperation Act, Chapter 791, Texas Government Code, whereby the County will provide the City with 9-1-1 address assignments.

NOW, THEREFORE, the County and City mutually agree as follows:

I.
PURPOSE

1.01 General. This Agreement will outline the services rendered by the County for assignment and review of Addressing and Street Name Standards adopted by the County. The City grants authority to the County to provide the application process, review, site visits, inspections, and enforcement of this Agreement under the regulations adopted by the County.

II.
CITY OBLIGATIONS

2.01 City Obligations. The City shall take any and all actions necessary to remain in compliance with Federal, State, and local regulations during the entire term of this Agreement. With the assistance and cooperation of the County, the City shall perform and provide the following services: (1) Include in the necessary steps of subdivision review, a requirement that the County must review and approve all new street names and street configuration on behalf of the City for the purposes of Hays County 9-1-1 Addressing; (2) Provide the County two (2) copies of all newly accepted and approved subdivision plats in the City; (3) Provide the County with digital data of the plat in a format in compliance with the Hays County Digital Data Standards; (4) Provide notification to the County of all upcoming subdivisions; (5) Coordinate with the County regarding any street name or address changes; (6) Provide the County with copies of all signed annexations, dis-annexations, maps, and ordinances in accordance with the Texas Election Code, Chapter 42, and Local Government Code Chapters 41, 42, and 43; (7) The City shall appoint an individual(s) to be the County's point-of-contact (POC).

III.
COUNTY OBLIGATIONS

3.01 County Obligations. The parties agree the County may contract to perform services similar or identical to those specified in this Agreement for such additional governmental or public entities as the County in its discretion sees fit.

Any civil liability relating to the furnishing of services under this Agreement shall be the responsibility of the County, except as herein provided. The parties agree that the County shall be acting as an independent contractor for the City in performing services contemplated by this Agreement. The County shall hold the City free and harmless from any obligation, costs, claims, judgements, attorney's fees, attachments, and other such liabilities arising from or growing out of the services rendered to the City pursuant to the terms of this Agreement or in any way connected with the

rendering of said services, except when the same shall arise because of the willful misconduct or negligence of the City.

As long as there are sufficient funds available and following the "9-1-1 Addressing & Street Name Standards" as adopted by the Hays County Commissioners Court and the guidelines published by the Capital Area Council of Governments (CAPCOG) in 2009 and any subsequent updates, with the assistance and cooperation of the City, the County shall perform and provide the following services within the City: (1) Assign an address for each addressable structure, whether vacant or not; (2) Review and approve street names in conjunction with street name configuration submitted for new subdivisions located within the corporate limits of the City; (3) Assign addresses to all newly-accepted-and-approved subdivisions in the City; (4) Provide copies of address plats to the Hays Central Appraisal District (Hays CAD), the United States Postal Service (U.S.P.S.), and the City (upon request). The County will accept application(s), supporting document(s) and collect all fees. The City, by and through its governing body, shall perform all duties required of the City and/or the governing body under the regulations.

IV.
DISPUTES

4.01 Material Breach; Notice and Opportunity to Cure.

(a) In the event that one Party believes another Party has materially breached one of the provisions of this Agreement, the non-defaulting Party will make written demand to cure and give the defaulting Party up to 30 days to cure such material breach, or, if the curative action cannot reasonably be completed within 30 days, the defaulting Party will commence the curative action within 30 days and thereafter diligently pursue the curative action to completion. Notwithstanding the foregoing, any matters specified in the default notice which may be cured solely by the payment of money must be cured within 10 days after receipt of the notice. This applicable time period must pass before the non-defaulting Party may initiate any remedies available to the non-defaulting Party due to such breach.

(b) Any non-defaulting Party will mitigate direct or consequential damage arising from any breach or default to the extent reasonably possible under the circumstances.

(c) The Parties agree that they will negotiate in good faith to resolve any disputes and may engage in non-binding mediation, arbitration, or other alternative dispute resolution methods as recommended by the laws of the State of Texas.

4.02 Equitable Relief. In recognition that failure in the performance of the Parties' respective obligations could not be adequately compensated in money damages alone, the Parties agree that after providing notice and an opportunity to cure in accordance with Section 4.01 above, the Parties shall have the right to request any court, agency, or other governmental authority of appropriate jurisdiction to grant any and all remedies which are appropriate to assure conformance to the provisions of this Agreement. The defaulting Party shall be liable to the other for all costs actually incurred in pursuing such remedies, including reasonable attorney's fees, and for any penalties or fines as a result of the failure to comply with the terms, including without limitation the right to obtain a writ of mandamus or an injunction requiring the governing body of the defaulting party to levy and collect rates and charges or other revenues sufficient to pay the amounts owed under this Agreement.

4.03 Agreement's Remedies Not Exclusive. The provisions of this Agreement providing remedies in the event of a Party's breach are not intended to be exclusive remedies. The Parties retain, except to the extent released or waived by the express terms of this Agreement, all rights at law and in equity to enforce the terms of this Agreement.

V.
GENERAL PROVISIONS

5.01 Authority. This Agreement is made in part under the authority conferred in Chapter 791, Texas Government

Code.

5.02 Term. This Agreement shall commence upon execution of this Agreement. It is expressly understood and agreed that this Agreement may be terminated for any reason at any time by either party upon thirty (30) days written notice. The Agreement will have no force or effect until duly executed by all parties. This Agreement shall terminate after one (1) year from the effective date. A renewal of this Agreement or extension may be granted if notification is given in writing to both parties at a minimum of sixty (60) days prior to the expiration.

5.03 Severability. The provisions of this Agreement are severable and, if any provision of this Agreement is held to be invalid for any reason by a court or agency of competent jurisdiction, the remainder of this Agreement will not be affected, and this Agreement will be construed as if the invalid portion had never been contained herein.

5.04 Default and Remedies. If the City fails to make reimbursement payments under this Agreement and continues such failure for thirty (30) days after the County provides written notice to cure, the City shall be deemed to be in default under this Agreement. In the event that the County defaults under this Agreement, and such default is not cured, the City may, in addition to any other remedy at law or equity, immediately terminate this Agreement or seek specific performance of this Agreement.

5.05 Payments from Current Revenues. Any payments required to be made by a Party under this Agreement will be paid from current revenues or other funds lawfully available to the Party for such purpose.

5.06 Cooperation. The Parties agree to cooperate at all times in good faith to effectuate the purposes and intent of this Agreement.

5.07 Entire Agreement. This Agreement contains the entire agreement of the Parties regarding the subject matter hereof and supersedes all prior or contemporaneous understandings or representations, whether oral or written, regarding the subject matter.

5.08 Amendments. Any amendment of this Agreement must be in writing and will be effective if signed by the authorized representatives of the Parties.

5.09 Applicable Law; Venue. This Agreement will be construed in accordance with Texas law. Venue for any action arising hereunder will be in Hays County, Texas.

5.10 Notices. Any notices given under this Agreement will be effective if: (i) forwarded to a Party by hand-delivery; (ii) transmitted to a Party by confirmed telecopy; or (iii) deposited with the U.S. Postal Service, postage prepaid, certified, to the address of the Party indicated below:

CITY:	City of Wimberley 221 Stillwater Wimberley, Texas 78676 512-847-0025
COUNTY:	Hays County Department of Development Services 2171 Yarrington Road Kyle, TX 78640 512-393-2150
WITH COPY TO:	Hays County Criminal District Attorney's Office Downtown Office 111 E. San Antonio St. #202 San Marcos, TX 78666

5.11 Counterparts; Effect of Partial Execution. This Agreement may be executed simultaneously in multiple counterparts, each of which will be deemed an original, but all of which will constitute the same instrument.

5.12 Authority. Each Party represents and warrants that it has the full right, power, and authority to execute this Agreement.

5.13 Effective Date. This Agreement is executed to be effective on the date the last Party signs this Agreement.

5.14 No Joint Venture. The Project is a sole project of the County and is not a joint venture or other partnership with the City.

IN WITNESS THEREOF, the Parties have each executed this Agreement, this the _____ day of _____, 2024 ("Effective Date").

HAYS COUNTY

BY: _____
Ruben Becerra, Hays County Judge

DATE: _____

ATTEST: _____
Elaine H. Cardenas, County Clerk

CITY OF WIMBERLEY

BY: Gina V. Fulkerson
Gina Fulkerson, City of Wimberley Mayor

DATE: 3-7-2023

ATTEST: Tammy Heller
Tammy Heller, City Secretary

AGENDA ITEM REQUEST FORM: J. 9.

Hays County Commissioners Court

Date: 03/26/2024

Requested By: Marcus Pacheco

Sponsor: Commissioner Smith

Agenda Item

Discussion and possible action to approve the renaming of a private driveway in Precinct 4, from CF Ranch Road to Ledgetop Lane. **SMITH/PACHECO**

Summary

The CF Ranch Homeowners Association has requested to rename their private driveway from CF Ranch Road to Ledgetop Lane in the CF Ranch Subdivision. The renaming of the road will affect lots 1A, 2A, 3A, and 4A. The property owners have signed the request for the street name change and the proposed name has been verified with the Hays County GIS Department.

Attachments

Address Application
Location Map-Ledgetop Ln

Hays County 9-1-1 Addressing

Hays County Development Services/GIS Division
2171 Yarrington Rd Ste. 100 Kyle, TX 78640
Phone (512) 393-2160
Email: hayscounty.gis@co.hays.tx.us

Applicant Information

Applicant Name: CF Ranch Homeowners Assoc.

Mailing Address: 1300 Creek Rd, Dripping Springs, TX 78620

Email: cfellers@verizon.net

Phone Number: 512 858 0330 512 585 7441 (call or text)

Relationship: ☐ Property Owner ☐ Builder ☐ Realtor ☐ Other: HOA president & Owner

Property Owner/Location Information

Property Owner Name: _____

CAD Quick Reference ID: _____ Acreage: _____

OR

Subdivision Name: CF Ranch

Phase: _____ Section: _____ Block: _____ Lot: Lots 1, 2, 3, 4

Street Name at Primary Access: Creek Road

Address Request

A site plan or survey of the property showing driveway access from the street and structure location(s) is required for all applications

Address Requested: (check all that apply)

☐ New Structure - Planned ☐ New Structure - Recently Completed ☐ Utility Meter ☐ Additional Structure ☐ Existing Structure

Type of Structure:

☐ Residential single-family site-built

☐ Residential Mobile/Modular home Shared Driveway; Road name

☐ Residential multifamily site built *(Site plan must include all building and apartment locations)*

☐ Commercial site-built business *(Site plan must include all buildings and show maximum number of potential suites per building)*

Acknowledgment

☒ *The information provided is true and correct to the best of my knowledge. I understand the physical address assigned is based upon the information that I provide.* Date: 1/11/2024

OFFICE USE ONLY – PLEASE DO NOT WRITE IN THIS AREA

Address #: _____ Street: _____ Unit: _____

Postal Community: _____

Assigned By: _____ Date: _____

******Please visit your local post office to receive instruction about how to change or start your mail delivery******

March 4, 2024

TO: Hays County 9-1-1 Addressing

FROM: CF Ranch Homeowners Association

RE: Request of change of Subdivision Road Name

The CF Ranch subdivision consists of four lots. The access is from Creek Road via what is a "shared driveway" as identified on the attached plat. The driveway became identified as CF Ranch Road in county records. It was not our intention to name the driveway CF Ranch Road—it was simply identified as such by an engineer on a plat. The owners of the four lots ask if it would be possible to change the name to

Ledgetop Lane

We have been in contact with Steve Floyd, who has been very helpful, and we understand this name is available and not a duplicate. We feel it appropriately reflects the topography of the setting of the road.

We appreciate any consideration you can give for this request and ask if there is any assistance we can provide or if there is a further procedure for us to perform. Thank you very much.

D'Nan Dean 3-3-24 John Dean 3/3/24

D'Nan and John H. Dean, owners of Lot 1

Claireen Fellers 3/25/24 Doyle Fellers 3-25-24

Claireen and Doyle Fellers, owners of Lots 2 and 3

3/6/24 Katie Connolly 3/6/24

Katie and Ryan Connolly, owners of Lot 4

Please note: Lot 1, owned by D'Nan and John H. Dean, borders the shared driveway/road; however, the Deans are using another entrance to their property from Creek Road and have an EMS address for it as 1270 Creek Road; they will not require an EMS address from this shared driveway/road. Only Lots 2, 3 and 4 will require EMS addresses. Thank you.

CF RANCH
A SUBDIVISION IN DRIPPING SPRINGS
HAYS COUNTY, TEXAS

VICINITY MAP

SCALE: 1" = 1000'

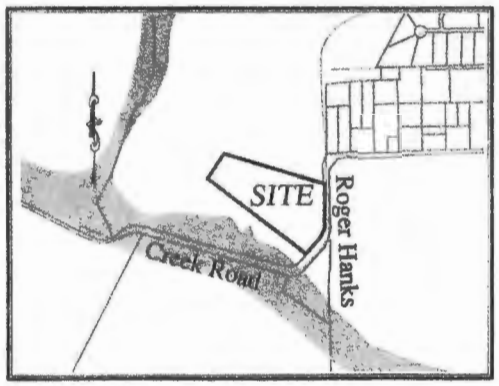

BENJAMIN F. HANNA LEAGUE SURVEY
NUMBER 28 ABSTRACT NUMBER 222
HAYS COUNTY, TEXAS

LEGEND

———	PROPERTY LINE
- - - - -	EXISTING PROPERTY LINE
———	EXISTING R.O.W. LINE
- - - - -	EXISTING EASEMENT
●	1/2" IRON ROD FOUND (UNLESS NOTED)
○	SET 1/2" IRON ROD WITH "DOUCET" CAP
△	CALCULATED POINT
DOC. NO.	DOCUMENT NUMBER
P.O.B.	POINT OF BEGINNING
VOL.	VOLUME
PG.	PAGE
R.O.W.	RIGHT-OF-WAY
P.R.H.C.T.	PLAT RECORDS, HAYS COUNTY, TEXAS
R.P.R.H.C.T.	REAL PROPERTY RECORDS, HAYS COUNTY, TEXAS
O.P.R.H.C.T.	OFFICIAL PUBLIC RECORDS, HAYS COUNTY, TEXAS
D.R.H.C.T.	DEED RECORDS, HAYS COUNTY, TEXAS

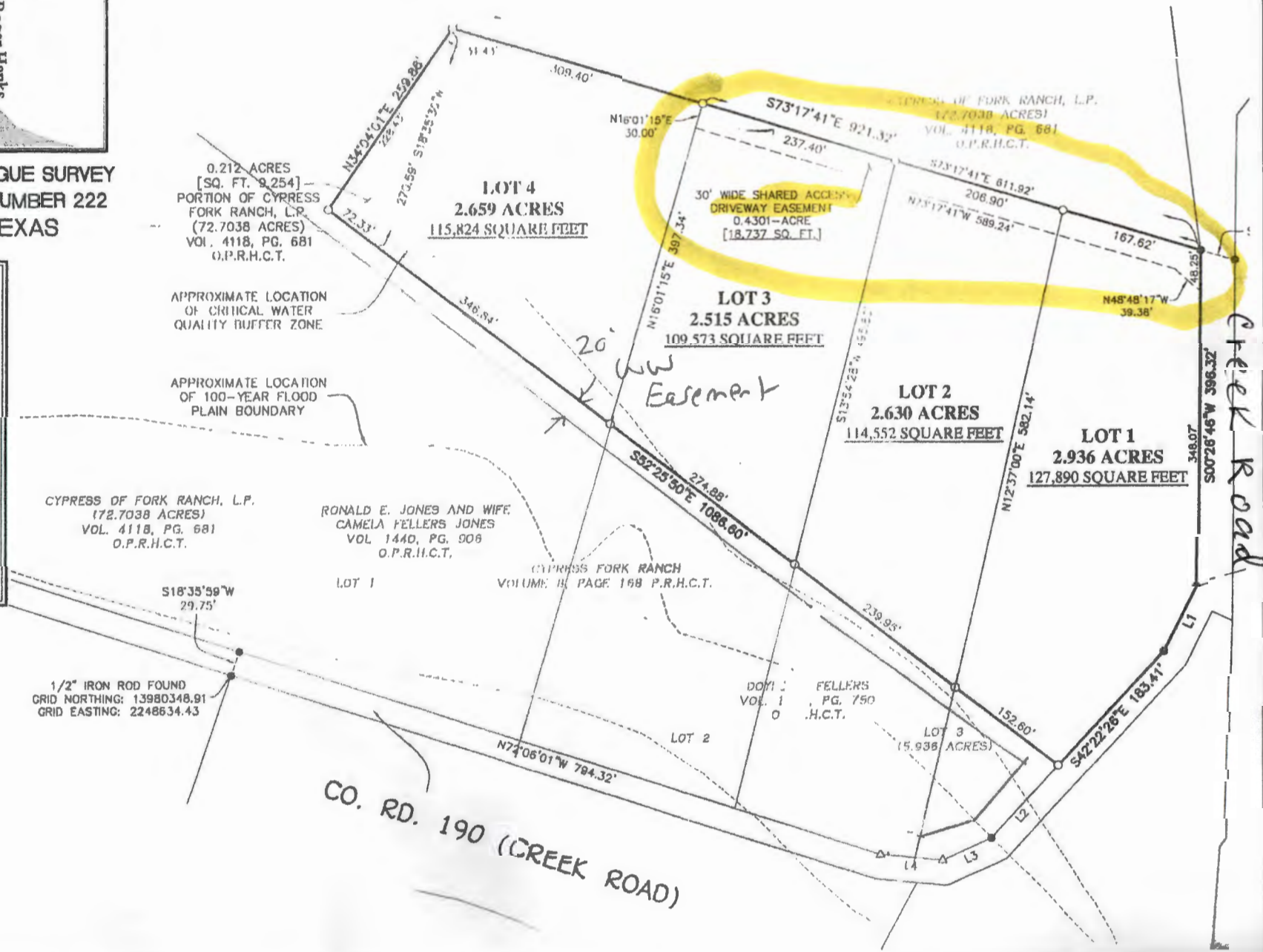

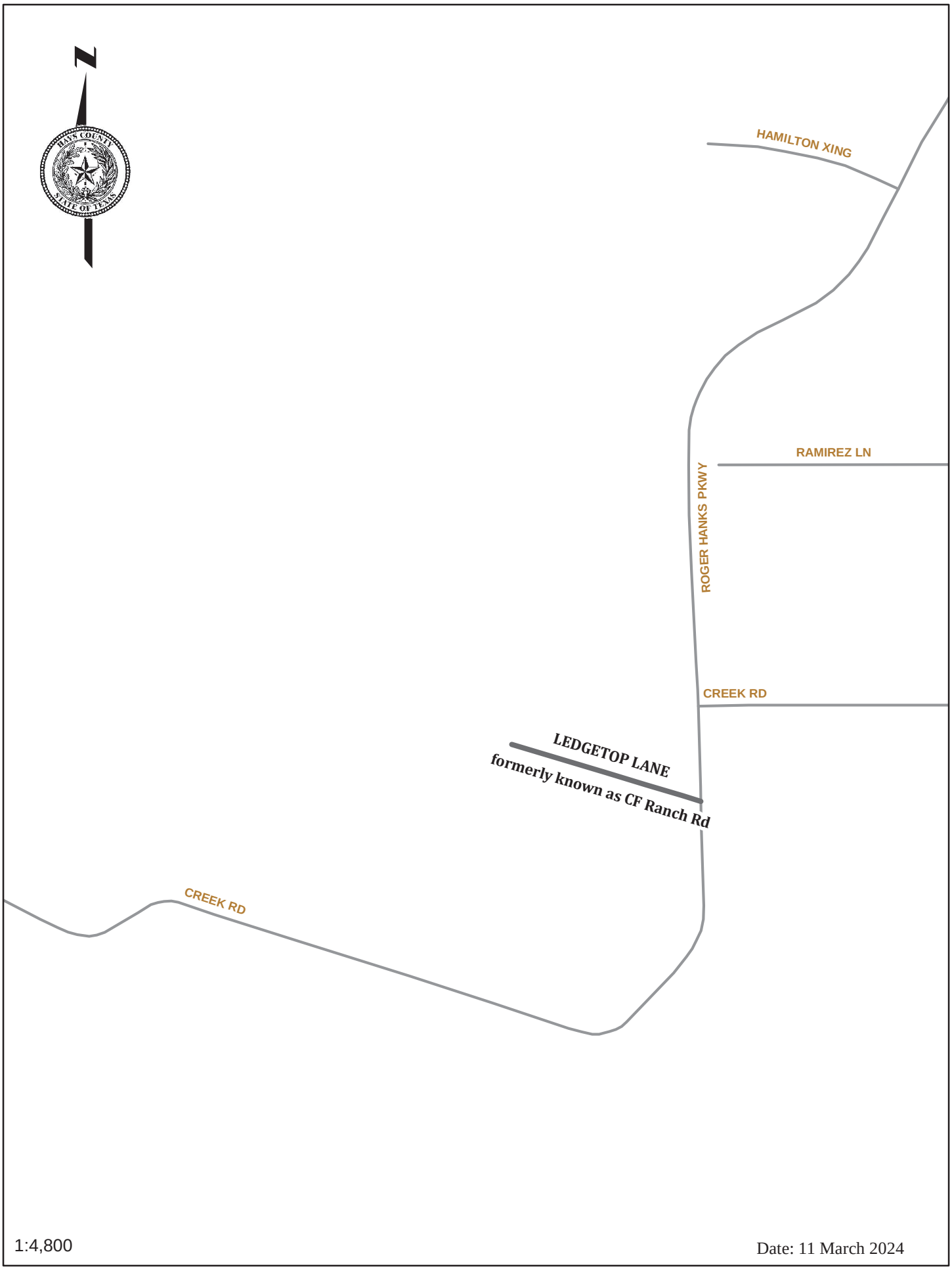
HAMILTON XING
RAMIREZ LN
ROGER HANKS PKWY
CREEK RD
LEDGETOP LANE
formerly known as CF Ranch Rd
CREEK RD
1:4,800
Date: 11 March 2024

AGENDA ITEM REQUEST FORM: J. 10.

Hays County Commissioners Court

Date: 03/26/2024

Requested By:

Sponsor: Commissioner Ingalsbe

Agenda Item

Discussion and possible action to accept the resignation of Commissioner Debbie Gonzales Ingalsbe from the Capital Area Council of Governments (CAPCOG) General Assembly and approve the appointment of Commissioner Walt Smith to the CAPCOG General Assembly to replace her effective March 26, 2024. **INGALSBE**

Summary

The CAPCOG General Assembly is composed of the official representatives of all member organizations which include cities and counties as well as school districts, chambers of commerce, nonprofit agencies, and any other organization that has an interest in COG programs and regionalism. The population of the cities and counties determine how many General Assembly representatives and at-large seats they may fill. The General Assembly meets at least twice per year.

AGENDA ITEM REQUEST FORM: J. 11.

Hays County Commissioners Court

Date: 03/26/2024

Requested By: Villarreal-Alonzo

Sponsor: Commissioner Ingalsbe

Agenda Item

Discussion and possible action to accept the Fiscal Year 2023 Hays County Annual Comprehensive Financial Report as audited by ABIP, PC Certified Public Accountants. **INGALSBE/VILLARREAL-ALONZO**

Summary

A representative of ABIP, PC will be present to discuss the report and to answer any related questions.

AGENDA ITEM REQUEST FORM: J. 12.

Hays County Commissioners Court

Date: 03/26/2024

Requested By: Jerry Borcherding

Sponsor: Judge Becerra

Agenda Item:

Discussion and possible action to award and execute a contract for IFB 2024-B07 Cemetery Maintenance to Primero TX LLC, dba Primero TX Landscaping. **BECERRA/BORCHERDING**

Summary:

On January 16, 2024, the Commissioners Court approved Purchasing to solicit bids for IFB 2024-B07 Cemetery Maintenance. Purchasing received eight (8) bids from the following companies:

Abescape Group, LLC
CTX ProScapes, LLC
CY Services and Landscape Solutions, LLC
Jager Industries, LLC
Kyle Landscaping Services
Olympia Landscape Development Inc.
Primero TX LLC, dba Primero TX Landscaping
WCD Enterprises, LLC

It is staff's recommendation to award the contract to Primero TX LLC, dba Primero TX Landscaping.

Fiscal Impact:

Amount Requested: Per bid tab
Line Item Number: 001-695-00.5491

Budget Office:

Source of Funds: General Fund
Budget Amendment Required Y/N?: No
Comments: N/A

Purchasing Office:

Purchasing Guidelines Followed Y/N?: Yes
Comments: Invitation for Bid (IFB) 2024-B07 Cemetery Maintenance

Auditor's Office

G/L Account Validated Y/N?: Yes, Cemetery Maintenance Expense
New Revenue Y/N?: N/A
Comments:

Attachments

(PE) Contract

SOLICITATION, OFFER AND AWARD

Hays County Auditor
Purchasing Office
712 S. Stagecoach Trail, Suite 1012
San Marcos, Texas 78666

Solicitation No.: IFB 2024-B07 Cemetery Maintenance	Date Issued: January 18, 2024

SOLICITATION

Vendors must submit proposals as listed: One (1) original and one (1) digital copy on a thumb drive at the Hays County Purchasing Office at the address shown above or Electronically through BidNet Direct and one (1) hard copy at the Hays County Purchasing Office at the address shown above until:

10:00 a.m. local time February 15, 2024.

Proposals received after the time and date set for submission will be returned unopened.

For information please email: purchasing@co.hays.tx.us	Questions concerning this IFB must be received in writing no later than 5:00 on January 25, 2024.	Phone No.: (512) 393-2267

OFFER (Must be fully completed by Respondent)

In compliance with the above, the undersigned offers and agrees to furnish all items or services awarded at the prices stipulated for each item delivered at the designated point(s) and within the time specified herein. Award shall include all solicitation documents and attachments.

MANUALLY SIGN ALL COPIES SUBMITTED. SIGNATURE IS MANDATORY.

Respondent		Respondent's Authorized Representative	
Entity Name:	Primero TX LLC dba,	Name:	Janie Burciaga
Mailing Address:	Primero TX Landscaping 1081 Elbel Rd Box 60 Schertz TX 78154	Title:	Office Manager
		Email Address:	Janie@primerotx.us
		Phone No.:	210-905-4645
Signature:		Date:	2-14-2024
Name, Email Address and Phone No. of person authorized to conduct negotiations on behalf of Respondent:	Xavier Burciaga xavierb@primerotx.us 210-905-4645		

NOTICE OF AWARD (To be completed by County)

Funding Source:	Awarded as to item(s):	Contract Amount:
	Per bid form	per bid form - per site rate
Vendor: Primero TX LLC.		Term of Contract: 1yr. w/ 4yr. Renewals
This contract issued pursuant to award made by Commissioners Court on:	Date: March 26, 2024	Agenda Item:

Important: Award notice may be made on this form or by other Authorized official written notice.		
	Hays County Judge	Date
	Hays County Clerk	Date

I. IFB Submittal Checklist

This checklist is provided for the Vendor's convenience and identifies the documents that MUST be submitted for the bid/proposal to be considered responsive, as well as the required forms requested by Hays County.

A COMPLETE SOLICITATION RESPONSE PACKAGE INCLUDES:

The following forms MUST be returned for the bid/proposal to be considered responsive:

✓ 1. Solicitation, Offer and Award Form completed and signed

✓ 2. Mandatory Bid Form: Attachment A

✓ 3. Vendor Reference Form

Required Forms by Hays County:

✓ 1. Conflict of Interest Questionnaire completed and signed

✓ 2. Code of Ethics signed

✓ 3. HUB Practices signed

✓ 4. House Bill 89 Verification signed and notarized

✓ 5. Senate Bill 252 Certification

✓ 6. Debarment & Licensing Certification signed and notarized

✓ 7. Vendor/Bidder's Affirmation completed and signed

✓ 8. Related Party Disclosure Form

✓ 9. Federal Affirmations and Solicitation Acceptance

✓ 10. System for Award Management (www.SAM.gov) Printout

✓ 11. Any addenda applicable to this solicitation

Hays County will accept bids, by the stated due date by one of the following methods:

____ 1. Electronic Submission of Bid Packet through BidNet Direct and one (1) hard copy delivered, within 24 hours of proposal due date, in a sealed envelope with the Solicitation Number and Vendor's name on the outermost envelope addressed to: Hays County Purchasing, 712 S Stagecoach Trail, Suite 1012, San Marcos, TX 78666

OR

✓ 2. One original of the proposal and a digital copy on a thumb drive in a sealed envelope with the Solicitation Number and Vendor's Name on the outermost envelope, addressed to:
Hays County Purchasing, 712 S Stagecoach Trail, Suite 1012, San Marcos, TX 78666

IFB 2024-B07 Cemetery Maintenance
Attachment A: Bid Form

Normal Maintenance: Total cost of Normal Maintenance per site, per service

Services would be provided upon request by Hays County, but no more than what is stated on the frequency chart. Awarded Contractor will work with the County Representative at the beginning of each month to determine which cemeteries need normal maintenance for the month. Awarded Contractor will only bill for actual work completed.

Frequency Chart:

Jan	Feb	March	April	May	June	July	Aug.	Sept.	Oct.	Nov.	Dec.	Total
2	2	4	4	4	4	4	4	4	4	2	2	40

Cemetery Name	Location	Approx. Acreage	Price per Site (per service)
Allen Family Cemetery	Buda, Chisholm Trail	1.5 acres	106.18
Antioch Cemetery	Buda, Old Black Colony Road	2.6 acres	184.04
Cemeterio Del Rio	San Marcos, located off FM 110, east of San Marcos River bridge.	2 acres	141.57
Cocke Cemetery	Buda, Hy Road	1 acre	70.79
Coronado Cemetery	Buda, Mathis Lane	.90 acre	63.71
Guadalupe Cemetery	San Marcos, Post Road	4.16 acres	294.47
Hays County Indigent Cemetery	Adjacent to San Pedro Cemetery, near the Posey Road/CR 266 intersection.	2.20 acres	155.73
Hector Family Cemetery	San Marcos, Rattler Road in Cottonwood Creek Subdivision	.09 acre	50.00
Kyle Family Pioneer Cemetery	Kyle, Post Road	½ acre	50.00
Phillips Cemetery	Dripping Springs, RR 12/150 intersection	2 acres	141.57
Pitts Cemetery	San Marcos, Hunter Road, South of McCarty	.89 acre	63.00
San Marcos/Blanco Cemetery	San Marcos, Post Road	10 acres	707.85
San Pedro Cemetery	San Marcos, Posey Rd & CR 266 intersection	3.61 acres	255.53
San Vicente Cemetery	Kyle, Old Stagecoach Road	1.6 acres	113.26
		Total (all location per service)	2,397.68
		Total for the year (Total all locations per service*40 weeks)	95,907.24

Additional Maintenance/Services: Per Man-Hourly Rate $ 18.33

V. Vendor Reference Form

Please list three (3) references of current customers who can verify the quality of service your company provides. The County prefers customers of similar size and scope of work to this proposal/bid. **This form must be returned with your bid/proposal.**

REFERENCE ONE

Company Name: Lake House at Dulap

Address: 586 Granda Drive, New Braunfels TX 78130

Contact Person and Title: Ambyr - manager

Phone Number: 830-358-7338

Scope & Duration of Contract: monthly maintenance - 12 months

Email: lakehaus@wpm.one

REFERENCE TWO

Company Name: Sedona Canyon

Address: 4620 Thousand Oaks Drive

Contact Person and Title: Christi Clifton - Property Manager

Phone Number: 210-653-1094

Scope & Duration of Contract: Monthly maintenance - 12 months

Email: SCmanager@disruptmgt.com

REFERENCE THREE

Company Name: Altamonte Apartments

Address: 12474 Starcrest Drive

Contact Person and Title: Claudia Hernandez

Phone Number: 210-491-9402

Scope & Duration of Contract: General Enhancements

Email: Chernandez@myapartmenthome.com

CONFLICT OF INTEREST QUESTIONNAIRE

FORM CIQ

For vendor doing business with local governmental entity

This questionnaire reflects changes made to the law by H.B. 23, 84th Leg., Regular Session.

This questionnaire is being filed in accordance with Chapter 176, Local Government Code, by a vendor who has a business relationship as defined by Section 176.001(1-a) with a local governmental entity and the vendor meets requirements under Section 176.006(a).

By law this questionnaire must be filed with the records administrator of the local governmental entity not later than the 7th business day after the date the vendor becomes aware of facts that require the statement to be filed. *See* Section 176.006(a-1), Local Government Code.

A vendor commits an offense if the vendor knowingly violates Section 176.006, Local Government Code. An offense under this section is a misdemeanor.

OFFICE USE ONLY

Date Received

1 **Name of vendor who has a business relationship with local governmental entity.**

Primero TX LLC dba Primero TX Landscaping

2 ☐ **Check this box if you are filing an update to a previously filed questionnaire.** (The law requires that you file an updated completed questionnaire with the appropriate filing authority not later than the 7th business day after the date on which you became aware that the originally filed questionnaire was incomplete or inaccurate.)

3 **Name of local government officer about whom the information is being disclosed.**

_____

Name of Officer

4 **Describe each employment or other business relationship with the local government officer, or a family member of the officer, as described by Section 176.003(a)(2)(A). Also describe any family relationship with the local government officer. Complete subparts A and B for each employment or business relationship described. Attach additional pages to this Form CIQ as necessary.**

A. Is the local government officer or a family member of the officer receiving or likely to receive taxable income, other than investment income, from the vendor?

☐ Yes ☑ No

B. Is the vendor receiving or likely to receive taxable income, other than investment income, from or at the direction of the local government officer or a family member of the officer AND the taxable income is not received from the local governmental entity?

☐ Yes ☑ No

5 **Describe each employment or business relationship that the vendor named in Section 1 maintains with a corporation or other business entity with respect to which the local government officer serves as an officer or director, or holds an ownership interest of one percent or more.**

6 ☐ Check this box if the vendor has given the local government officer or a family member of the officer one or more gifts as described in Section 176.003(a)(2)(B), excluding gifts described in Section 176.003(a-1).

7

Signature of vendor doing business with the governmental entity

2-14-2024

Date

CONFLICT OF INTEREST QUESTIONNAIRE
For vendor doing business with local governmental entity

A complete copy of Chapter 176 of the Local Government Code may be found at http://www.statutes.legis.state.tx.us/Docs/LG/htm/LG.176.htm. For easy reference, below are some of the sections cited on this form.

Local Government Code § 176.001(1-a): "Business relationship" means a connection between two or more parties based on commercial activity of one of the parties. The term does not include a connection based on:

(A) a transaction that is subject to rate or fee regulation by a federal, state, or local governmental entity or an agency of a federal, state, or local governmental entity;

(B) a transaction conducted at a price and subject to terms available to the public; or

(C) a purchase or lease of goods or services from a person that is chartered by a state or federal agency and that is subject to regular examination by, and reporting to, that agency.

Local Government Code § 176.003(a)(2)(A) and (B):

(a) A local government officer shall file a conflicts disclosure statement with respect to a vendor if:

***

(2) the vendor:

(A) has an employment or other business relationship with the local government officer or a family member of the officer that results in the officer or family member receiving taxable income, other than investment income, that exceeds $2,500 during the 12-month period preceding the date that the officer becomes aware that

(i) a contract between the local governmental entity and vendor has been executed; or

(ii) the local governmental entity is considering entering into a contract with the vendor;

(B) has given to the local government officer or a family member of the officer one or more gifts that have an aggregate value of more than $100 in the 12-month period preceding the date the officer becomes aware that:

(i) a contract between the local governmental entity and vendor has been executed; or

(ii) the local governmental entity is considering entering into a contract with the vendor.

Local Government Code § 176.006(a) and (a-1)

(a) A vendor shall file a completed conflict of interest questionnaire if the vendor has a business relationship with a local governmental entity and:

(1) has an employment or other business relationship with a local government officer of that local governmental entity, or a family member of the officer, described by Section 176.003(a)(2)(A);

(2) has given a local government officer of that local governmental entity, or a family member of the officer, one or more gifts with the aggregate value specified by Section 176.003(a)(2)(B), excluding any gift described by Section 176.003(a-1); or

(3) has a family relationship with a local government officer of that local governmental entity.

(a-1) The completed conflict of interest questionnaire must be filed with the appropriate records administrator not later than the seventh business day after the later of:

(1) the date that the vendor:

(A) begins discussions or negotiations to enter into a contract with the local governmental entity; or

(B) submits to the local governmental entity an application, response to a request for proposals or bids, correspondence, or another writing related to a potential contract with the local governmental entity; or

(2) the date the vendor becomes aware:

(A) of an employment or other business relationship with a local government officer, or a family member of the officer, described by Subsection (a);

(B) that the vendor has given one or more gifts described by Subsection (a); or

(C) of a family relationship with a local government officer.

VIII. CODE OF ETHICS FOR HAYS COUNTY

Public employment is a public trust. It is the policy of Hays County to promote and balance the objective of protecting government integrity and the objective of facilitating the recruitment and retention of personnel needed by Hays County. Such a policy implemented by prescribing essential standards of ethical conduct without creating unnecessary obstacles to entering public services.

Public servants must discharge their duties impartially so as to assure fair competitive access to governmental procurement by responsible contractors. Moreover, they should conduct themselves in such a manner as to foster public confidence in the integrity of the Hays County procurement organization.

To achieve the purpose of this article, it is essential that those doing business with Hays County also observe the ethical standards prescribed here.

It shall be a breach of ethics to attempt to influence any public employee, elected official or department head to breach the standards of ethical conduct set forth in this code.

It shall be a breach of ethics for any employee of Hays County or a vendor doing business with the county to participate directly or indirectly in a procurement when the employee or vendor knows that:

The employee or any member of the employee's immediate family, or household has a substantial financial interest pertaining to the procurement. This means ownership of 10% or more of the company involved and/or ownership of stock or other interest or such valued at $2500.00 or more.

A business or organization in which the employee, or any member of the employee's immediate family, has a financial interest pertaining to the procurement.

Gratuities: It shall be a breach of ethics to offer, give or agree to give any employee of Hays County or for any employee to solicit, demand, accept or agree to accept from a vendor, a gratuity of consequence or any offer of employment in connection with any decision approval, disapproval, recommendation, preparation or any part of a program requirement or purchase request influencing the content of any specification or procurement standard, rendering of advice, investigation, auditing, or in any other advisory capacity in any proceeding or controversy, any particular matter pertaining to any program requirement or a contract or subcontract, or to any solicitation or proposal therefore pending before this government.

Kickbacks: It shall be a breach of ethics for any payment, gratuity or offer of employment to be made by or on behalf of a subcontractor under a contract to the prime contractor or higher tier subcontractor for any contract for Hays County as an inducement for the award of a contract or order.

Contract Clause: The prohibition against gratuities and kickbacks prescribed above shall be conspicuously set forth in every contract and solicitation therefore.

Any effort to influence any employee, elected official, or department head to violate the standards of the code is grounds to void the contract. Please certify, by your signature below, that you understand the ethics policy of Hays County and in no way will attempt to violate the code.

SIGNATURE: Xaner Buruaga

PRINT NAME & TITLE: Xaner Buruaga - President

COMPANY NAME: Primero TX LLC

IX. Hays County Practices Related to Historically Underutilized Businesses

1. STATEMENT OF PRACTICES

Hays County will strive to ensure that all businesses, regardless of size, economic, social or ethnic status have an equal opportunity to participate in the County's procurement processes. The County is committed to promote full and equal business opportunity for all businesses to supply the goods and services needed to support the mission and operations of county government, and seeks to encourage the use of certified historically underutilized businesses (HUB's) through the use of race, ethnic and gender neutral means. It is the practice of Hays County to involve certified HUBs to the greatest extent feasible in the County's procurement of goods, equipment, services and construction projects while maintaining competition and quality of work standards. The County affirms the good faith efforts who recognize and practice similar business standards.

2. DEFINITIONS

Historically underutilized businesses (HUBs), also known as a disadvantaged business enterprise (DBE), are generally business enterprises at least 51% of which is owned and the management and daily business operations are controlled by one or more persons who is/are socially and economically disadvantaged because of his/her identification as a member of certain groups, including women, Black Americans, Mexican Americans, and other Americans if Hispanic origin, Asian Americans and American Indians.

Businesses include firms, corporations, sole proprietorships, vendors, suppliers, contractors, subcontractors, professionals and other similar references when referring to a business that provides goods and/or services regardless of the commodity category.

Certified HUB's include business enterprises that meet the definition of a HUB and who meet the certification requirements of certification agencies recognized by Hays County, as expressed below.

Statutory bid limit refers to the Texas Local Government Code provision that requires competitive bidding for many items valued at greater than $50,000.

3. GUIDELINES

a. Hays County, its contractors, their subcontractors and suppliers, as well as all vendors of goods, equipment and services, shall not discriminate on the basis of race, color, creed, gender, age, religion, national origin, citizenship, mental or physical disability, veteran's status or political affiliation in the award and/or performance of contracts. All entities doing business or anticipating doing business with the County shall support, encourage and implement affirmative steps toward a common goal of establishing equal opportunity for all citizens and businesses of the County.

b. Vendors and/or contractors desiring to participate in the HUB program must successfully complete the certification process with the State of Texas or Texas Unified Certification Program. The vendor or contractor is also required to hold a current valid certification (title) from either of these entities.

c. Vendors and/or contractors must be registered with the State Comptroller's web-based HUB directory and with the Comptroller's Centralized Master Bidder's List (CMBL). Hays County will solicit bids from certified HUB's for state purchasing and public works contracts.

4. Hays County will actively seek and encourage HUBs to participate in all facets of the procurement process by:
    a. Continuing to increase and monitor a database of certified HUB vendors, professionals and contractors. The database will be expanded to include products, areas of expertise and capabilities of each HUB firm.
    b. Continuing to seek new communication links with HUB vendors, professionals and contractors to involve them in the procurement process.
    c. Continuing to advertise bids on the County's website and in the newspapers including newspapers that target socially and economically disadvantaged communities.
5. As prescribed by law, the purchase of one or more items costing in excess of the statutory bid limit must comply with the competitive bid process. Where possible, those bids will be structured to include and encourage the participation of HUB firms in the procurement process by:
    a. Division of proposed requisitions into reasonable lots in keeping with industry standards and competitive bid requirements.
    b. Where feasible, assessment of bond and insurance requirements and the designing of such requirements to reasonably permit more than one business to perform the work.
    c. Specifications of reasonable, realistic delivery schedules consistent with the County's actual requirements.
    d. Specifications, terms and conditions reflecting the County's actual requirements are clearly stated, and do not impose unreasonable or unnecessary contract requirements.
6. A HUB practice statement shall be included in all specifications. The County will consider the bidder's responsiveness to the HUB Practices in the evaluation of bids and proposals. Failure to demonstrate a good faith effort to comply with the County's HUB practices may result in a bid or proposal being considered non-responsive to specifications.
7. Nothing in this practice statement shall be construed to require the County to award a contract other than to the lowest responsive bidder as required by law. This practice is narrowly tailored in accordance with applicable law.

Please sign for acknowledgement of the Hays County HUB Practices:

Signature

14 ~~12~~
2-~~12~~ - 2024
Date

X. Hays County House Bill 89 Verification

I, Xavier Burciaga (Person name), the undersigned representative of Primero TX LLC (Company or Business name, hereafter referred to as Company) being an adult over the age of eighteen (18) years of age, after being duly sworn by the undersigned notary, do hereby depose and verify under oath that the company named above, under the provisions of Subtitle F, Title 10, Government Code Chapter 2270:

1. Does not boycott Israel currently; and
2. Will not boycott Israel during the term of the contract.

Pursuant to Section 2270.001, Texas Government Code:

1. *"Boycott Israel" means refusing to deal with, terminating business activities with, or otherwise taking any action that is intended to penalize, inflict economic harm on, or limit commercial relations specifically with Israel, or with a person or entity doing business in Israel or in an Israeli-controlled territory, but does not include an action made for ordinary business purposes; and*

2. *"Company" means a for-profit sole proprietorship, organization, association, corporation, partnership, joint venture, limited partnership, limited liability partnership, or any limited liability company, including a wholly owned subsidiary, majority-owned subsidiary, parent company or affiliate of those entities or business associations that exist to make a profit.*

Signature of Company Representative

2-14-2024
Date

On this 14th day of February, 2024, personally appeared Xavier Burciaga, the above-named person, who after by me being duly sworn, did swear and confirm that the above is true and correct.

NOTARY SEAL

Notary Public in and for the State of Texas

ANTHONY PALOMO
Notary Public, State of Texas
My Comm. Exp. 05-19-2027
ID No. 13437141-9

5/19/27
Date

XI. Hays County Purchasing Department Senate Bill 252 Certification

Pursuant to Texas Government Code, Chapter 2252, Section 2252.152 and Section 2252.153, certify that the company named below is not listed on the website of the Comptroller of the State of Texas concerning the listing of companies that are identified under Section 806.051, Section 807.051 or Section 2253.153. I further certify that should the above-named company enter into a contract that is on said listing of companies on the website of the Comptroller of the State of Texas which do business with Iran, Sudan or any Foreign Terrorist Organization, I will immediately notify the Hays County Purchasing Department.

Primero TX LLC dba Primero TX Landscaping

Company Name

Xavier Burcuaga

Print Name of Company Representative

Signature of Company Representative

2-14-2024

Date

CERTIFICATION CHECK PERFORMED BY HAYS COUNTY PURCHASING:

On this day, the Purchasing Representative for Hays County in San Marcos, Texas, pursuant to Texas Government Code, Chapter 2252, Section 2252.152, Section 2252.153 and Chapter 2270, certify that I did review the website of the Comptroller of the State of Texas concerning the listing of companies that is identified under Section 806.051, Section 807.051, Chapter 808, Section 809.051 or Section 2253.253 and I have ascertained that the above-named company is not contained on said listing of companies which do business with Iran, Sudan or any Foreign Terrorist Organization.

Stephanie Hunt

Print Name of Hays County Purchasing Representative

Stephanie Hunt

Signature of Hays County Purchasing Representative

February 21, 2024

Date

IFB 2024-B07

IFB/RFP/RFQ Number

XII. Debarment and Licensing Certification

STATE OF TEXAS §
§
COUNTY OF ~~HAYS~~ Comal §

I, the undersigned, being duly sworn or under penalty of perjury under the laws of the United States and the State of Texas, certifies that Firm named herein below and its principals:

a. Are not presently debarred, suspended, proposed for debarment, declared ineligible or voluntarily excluded from covered transactions by any federal department or agency;
b. Have not within a three-year period preceding this proposal been convicted of or had a civil judgment rendered against them for commission of fraud or a criminal offense in connection with obtaining, attempting to obtain, or performing a public (federal, state or local) transaction or contract under a public transaction; violation of federal or state antitrust statutes or commission of embezzlement, theft, forgery, bribery, falsification or destruction of records, making false statements, or receiving stolen property;
c. Are not presently indicted for or otherwise criminally or civilly charged by a federal, state or local governmental entity with commission of any of the offenses enumerated in paragraph (1)(b) of this certification;
d. Have not within a three-year period preceding this application/proposal had one or more public (federal, state or local) transactions terminated for cause or default;
e. Are registered and licensed in the State of Texas to perform the professional services which are necessary for the project; and
f. Have not been disciplined or issued a formal reprimand by any State agency for professional accreditation within the past three years.

Primero TX LLC
Name of Firm

Signature of Certifying Official

President
Title of Certifying Official

Xavier Burcuaga
Printed Name of Certifying Official

2-14-2024
Date

Where the Firm is unable to certify to any of the statements in this certification, such Firm shall attach an explanation to this certification.

SUBSCRIBED and sworn to before me the undersigned authority by Xavier Burcuasa on this the day of feb, 2024, on behalf of said Firm.

ANTHONY PALOMO
Notary Public, State of Texas
My Comm. Exp. 05-19-2027
ID No. 13437141-9

Notary Public in and for the State of Texas

My commission expires: 5/19/27

XIII. Vendor/Bidder's Affirmation

1. Vendor/Bidder affirms that they are duly authorized to execute this Contract, that this company, corporation, firm, partnership or individual has not prepared this bid in collusion with any other bidder, and that the contents of this bid as to price, terms or conditions of said bid have not been communicated by the undersigned nor by any employee or agent to any other person engages in this type of business prior to the official opening of this bid.

2. Vendor/Bidder hereby assigns to Purchaser any and all claims for overcharges associated with this Contract which arise under the antitrust laws of the United States, 15 USCA Section 1 et seq., and which arise under the antitrust laws of the State of Texas, Tex. Bus. & Com. Code, Section 15.01, et seq.

3. Pursuant to 262.0276 (a) of the Texas Local Government Code, Vendor/Bidder, hereby affirms that Vendor/Bidder:

   ✓ Does not own taxable property in Hays County, or;

   ✓ Does not owe any ad valorem taxes to Hays County or is not otherwise indebted to Hays County

Primero TX LLC
Name of Contracting Company

If taxable property is owned in Hays County, list property ID numbers:

N/A

Signature of Company Official Authorizing Bid/Offer

Xavier Buruaga
Printed Name

President
Title

xavierb@primerotx.us
Email Address

210-905-4645
Phone

XIV. Related Party Disclosure Form

Hays County strives to provide financial transparency to its taxpayers. Completion of this form will allow for added transparency into the procurement process by disclosing Vendor relationships with current or former Hays County employees. The existence of a relationship may not present a legal or ethical conflict for a Vendor. However, disclosure will allow for consideration of potential conflicts and/or ways to eliminate conflicts.

A Vendor who Employs any of the following is required to disclose the relationship on this form:

- Current Hays County employee (including elected or appointed official) (Complete Section A)
- Former Hays County employee who has been separated from Hays County for no less than four (4) years (including elected or appointed official) (Complete Section B)
- Person related within the 2nd degree of consanguinity or affinity to either of the above[1] (Complete Section C)

If no known relationships exist, complete Section D.

This form is required to be completed in full and submitted with the proposal package. A submitted proposal package that does not include this completed form will be considered non-responsive and will not be eligible for an award.

Section A: Current Hays County Employee

Employee Name Title

Section B: Former Hays County Employee

Employee Name Title Date of Separation from County

Section C: Person Related to Current or Former Hays County Employee

Employee or Former Employee Name Title

Name of Related Person Title Relationship

Section D: No Known Relationships

If no relationships in accordance with the above exist or are known to exist, provide a written explanation below:

Our company confirms that there are no familial ties between our company and any entities associated with Hay County.

Attach additional pages if necessary.

I, the undersigned, hereby certify that the information provided is true and complete to the best of my knowledge.

Primero TX LLC
Name of Vendor

Signature of Certifying Official

President
Title of Certifying Official

Xavier Burciaga
Printed Name of Certifying Official

2/14/2024
Date

[1]A degree of relationship is determined under Texas Government Code Chapter 573. (as outlined below)

Relationship of Consanguinity				
	1st Degree	**2nd Degree**	**3rd Degree***	**4th Degree***
Person	child or parent	grandchild, sister, brother or grand-parent	great-grandchild, niece, nephew, aunt,* uncle* or great-grandparent	great-great-grandchild, grandniece, grandnephew, first cousin, great aunt,* great uncle* or great-great-grandparent
* An aunt, uncle, great aunt or great uncle is related to a person by consanguinity only if he or she is the sibling of the person's parent or grandparent.				

Relationship of Affinity		
	1st Degree	**2nd Degree**
Person	spouse, mother-in-law, father-in-law, son-in-law, daughter-in-law, stepson, stepdaughter, stepmother or stepfather	brother-in-law, sister-in-law, spouse's grandparent, spouse's grandchild, grandchild's spouse or spouse of grandparent

"Vendor" shall mean any individuals or entity that seeks to enter into a contract with Hays County.

"Employs" shall mean any relationship wherein Vendor has made arrangements to compensate an individual, directly or by way of a business organization in which the individual has a sharehold or ownership interest, even if that arrangement is contractual and/or on an hourly-charge basis.

XV. FEDERAL AFFIRMATIONS AND SOLICITATION ACCEPTANCE

In the event federal funds are used for payment of part or all of the consideration due under any contract resulting from this Solicitation Response, Respondent must execute this **Federal Affirmation and Solicitation Acceptance**, which shall constitute an agreement, without exception, to the following affirmations:

1. **Debarment and Suspension (2 CFR 180.220)**
   Respondent certifies, by signing this Attachment, that neither it nor any of its principals or subcontractors are presently debarred, suspended, proposed for debarment, declared ineligible, or voluntarily excluded from participation in this transaction by any federal department or agency. This certification is made pursuant to the OMB guidelines at 2 CFR 180 that implement Executive Order 12549 (3 C.F.R. Part 1986 Comp., p. 189) and 12689 (3 C.F.R. Part 1989 Comp., p. 235), Debarment and Suspension, 28 C.F.R. pt. 67, § 67.510, as published as pt. VII of the May 26, 1988, Federal Register (pp. 19160-19211), and any relevant program-specific regulations. This provision shall be required of every subcontractor receiving any payment in whole or in part from federal funds.

2. **Americans with Disabilities Act**
   Respondent and any potential subcontractors shall comply with all terms, conditions, and requirements of the Americans with Disabilities Act of 1990 (P.L. 101-136), 42 U.S.C. 12101, as amended, and regulations adopted thereunder contained in 28 C.F.R. 26.101-36.999, inclusive, and any relevant program- specific regulations.

3. **Discrimination**
   Respondent and any potential subcontractors shall comply with all Federal statutes relating to nondiscrimination. These include, but are not limited to:
   a. Title VI of the Civil Rights Act of 1964 (P.L. 88-352), which prohibits discrimination on the basis of race, color, or national origin;
   b. Title IX of the Education Amendments of 1972, as amended (20 U.S.C. §§1681-1683, and 1685-1686), which prohibits discrimination on the basis of sex;
   c. Section 504 of the Rehabilitation Act of 1973, as amended (29 U.S.C. §794), which prohibits discrimination on the basis of handicaps;
   d. The Age Discrimination Act of 1975, as amended (42 U.S.C. §§6101- 6107), which prohibits discrimination on the basis of age;
   e. The Drug Abuse Office and Treatment Act of 1972 (P.L. 92-255), as amended, relating to nondiscrimination on the basis of drug abuse;
   f. The Comprehensive Alcohol Abuse and Alcoholism Prevention, Treatment and Rehabilitation Act of 1970 (P.L. 91-616), as amended, relating to nondiscrimination on the basis of alcohol abuse or alcoholism;
   g. Sections 523 and 527 of the Public Health Service Act of 1912 (42 U.S.C. §§290 dd-3 and 290 ee-3), as amended, relating to confidentiality of alcohol and drug abuse patient records;
   h. Title VIII of the Civil Rights Act of 1968 (42 U.S.C. §§3601 et seq.), as amended, relating to nondiscrimination in the sale, rental, or financing of housing;
   i. Any other nondiscrimination provisions in the specific statute(s) under which application for Federal assistance is being made; and
   j. The requirements of any other nondiscrimination statute(s) that may apply to the application.

4. **Equal Employment Opportunity**
   Except as otherwise provided under 41 CFR Part 60, all contracts that meet the definition of "federally assisted construction contract" in 41 CFR Part 60-1.3 must include the equal opportunity clause provided under 41 CFR 60-1.4(b), in accordance with Executive Order 11246, "Equal Employment Opportunity" (30 FR 12319, 12935, 3 CFR Part, 1964-1965 Comp., p. 339), as amended by Executive Order 11375, "Amending Executive Order 11246 Relating to Equal Employment Opportunity," and implementing regulations at 41 CFR part 60, "Office of Federal Contract Compliance Programs, Equal Employment Opportunity, Department of Labor."

5. **Wages**
Under the Davis Bacon Act, 40 U.S.C. 276a – 276a-5 (40 U.S.C. 3141-3148), as amended, and the regulations adopted thereunder contained in 29 C.F.R. pt. 1 and 5. When required by Federal program legislation, all prime construction contracts in excess of $2,000 awarded by non-Federal entities must include a provision for compliance with the Davis-Bacon as supplemented by Department of Labor regulations (29 CFR Part 5, "Labor Standards Provisions Applicable to Contracts Covering Federally Financed and Assisted Construction"). Respondent and any potential subcontractors have a duty to and shall pay the prevailing wage rate specified in a wage determination made by the Secretary of Labor. In addition, contractors must be required to pay wages not less than once a week. The non-Federal entity must place a copy of the current prevailing wage determination issued by the Department of Labor in each solicitation. The decision to award a contract or subcontract must be conditioned upon the acceptance of the wage determination. The non-Federal entity must report all suspected or reported violations to the Federal awarding agency.

6. **Contract Work Hours and Safety Standards Act (40 U.S.C. 3701-3708)**
Where applicable, all contracts awarded by the non-Federal entity in excess of $100,000 that involve the employment of mechanics or laborers must include a provision for compliance with 40 U.S.C. 3702 and 3704, as supplemented by Department of Labor regulations (29 CFR Part 5). Under 40 U.S.C. 3702 of the Act, each contractor must be required to compute the wages of every mechanic and laborer on the basis of a standard work week of 40 hours. Work in excess of the standard work week is permissible provided that the worker is compensated at a rate of not less than one and a half times the basic rate of pay for all hours worked in excess of 40 hours in the work week. The requirements of 40 U.S.C. 3704 are applicable to construction work and provide that no laborer or mechanic must be required to work in surroundings or under working conditions which are unsanitary, hazardous or dangerous. These requirements do not apply to the purchases of supplies or materials or articles ordinarily available on the open market, or contracts for transportation or transmission of intelligence.

7. Contracts for more than the simplified acquisition threshold currently set at $150,000, which is the inflation adjusted amount determined by the Civilian Agency Acquisition Council and the Defense Acquisition Regulations Council (Councils) as authorized by 41 U.S.C. 1908, must address administrative, contractual, or legal remedies in instances where contractors violate or breach contract terms, and provide for such sanctions and penalties as appropriate.

8. All contracts in excess of $10,000 must address termination for cause and for convenience by the non-Federal entity including the manner by which it will be affected and the basis for settlement.

9. **Lobbying**
If Respondent, in connection with any resulting contract from this Solicitation, is a recipient of a Federal contract, grant, or cooperative agreement exceeding $100,000 or a Federal loan or loan guarantee exceeding $150,000, the Contractor shall comply with the requirements of the new restrictions on lobbying contained in Section 1352, Title 31 of the U.S. Code, which are implemented in 15 CFR Part 28. Respondent shall require that the certification language of Section 1352, Title 31 of the U.S. Code be included in the award documents for all subcontracts and require that all subcontractors submit certification and disclosure forms accordingly. Each tier certifies to the tier above that it will not and has not used Federal appropriated funds to pay any person or organization for influencing or attempting to influence an officer or employee of any agency, a member of Congress, officer or employee of Congress, or an employee of a member of Congress in connection with obtaining any Federal contract, grant or any other award. Each tier must also disclose any lobbying with non-Federal funds that takes place in connection with obtaining any Federal award. Such disclosures are forwarded from tier to tier up to the non-Federal award.

10. **Rights to Inventions Made Under a Contract or Agreement**
If the Federal award meets the definition of "funding agreement" under 37 CFR § 401.2 (a) and the recipient or subrecipient wishes to enter into a contract with a small business firm or nonprofit organization regarding the substitution of parties, assignment or performance of experimental, developmental, or research work under

that "funding agreement," the recipient or subrecipient must comply with the requirements of 37 CFR Part 401, "Rights to Inventions Made by Nonprofit Organizations and Small Business Firms Under Government Grants, Contracts and Cooperative Agreements," and any implementing regulations issued by the awarding agency.

11. Minority and Women's Businesses

Respondent and any potential subcontractors shall take affirmative steps to assure that minority and women's businesses are utilized when possible as sources of supplies, equipment, construction, and services, as detailed in the federal requirements relating to minority and women's business enterprises: Executive Order 11625 of October 13, 1971, 36 Fed. Reg. 19967, as amended by Executive Order No. 12007 of August 22, 1977, 42 Fed. Reg. 42839; Executive Order No. 12432 of July 14, 1983, 48 Fed. Reg., 32551; and Executive Order No. 12138 of May 18, 1979, 44 Fed. Reg. 29637.

12. Environmental Standards

Respondent and any potential subcontractors shall comply with environmental standards that may be prescribed pursuant to the following:

a. Institution of environmental quality control measures under the National Environmental Policy Act of 1969 (P.L. 91-190) and Executive Order (EO) 11514;

b. Notification of violating facilities pursuant to EO 11738;

c. Protection of wetlands pursuant to EO 11990;

d. Evaluation of flood hazards in floodplains in accordance with EO 11988;

e. Assurance of project consistency with the approved State management program developed under the Coastal Zone Management Act of 1972 (16 U.S.C. §§1451 et seq.);

f. Conformity of Federal actions to State (Clean Air) Implementation Plans under Section 176(c) of the Clean Air Act of 1955, as amended (42 U.S.C.§§7401 et seq.);

g. Contracts and subgrants of amounts in excess of $150,000 must contain a provision that requires the non- Federal award to agree to comply with all applicable standards, orders or regulations issued pursuant to the Federal Water Pollution Control Act as amended (33 U.S.C. 1251-1387). Violations must be reported to the Federal awarding agency and the Regional Office of the Environmental Protection Agency (EPA).

h. Protection of underground sources of drinking water under the Safe Drinking Water Act of 1974, as amended (P.L. 93-523); and

i. Protection of endangered species under the Endangered Species Act of 1973, as amended (P.L. 93-205).

j. Mandatory standards and policies relating to energy efficiency which are contained in the state energy conservation plan issued in compliance with the Energy Policy and Conservation Act (42 U.S.C. 6201).

k. A non-Federal entity that is a state agency or agency of a political subdivision of a state and its contractors must comply with section 6002 of the Solid Waste Disposal Act, as amended by the Resource Conservation and Recovery Act. The requirements of Section 6002 include procuring only items designated in guidelines of the Environmental Protection Agency (EPA) at 40 CFR part 247 that contain the highest percentage of recovered materials practicable, consistent with maintaining a satisfactory level of competition, where the purchase price of the item exceeds $10,000 or the value of the quantity acquired during the preceding fiscal year exceeded

- $10,000; procuring solid waste management services in a manner that maximizes energy and resource recovery; and establishing an affirmative procurement program for procurement of recovered materials identified in the EPA guidelines.

13. Historic Properties

Respondent and any potential subcontractors shall assist the awarding agency in assuring compliance with Section 106 of the National Historic Preservation Act of 1966, as amended (16 U.S.C. §470), EO 11593 (identification and protection of historic properties), and the Archaeological and Historic Preservation Act of 1974 (16 U.S.C. §§469a-1 et seq.).

14. All Other Federal Laws

Respondent and any potential subcontractors shall comply with all applicable requirements of all other Federal laws, executive orders, regulations, and policies governing the Solicitation.

I have read, understand, and agree to comply with the Federal Affirmations specified above. Checking "YES" indicates acceptance, while checking "NO" denotes non-acceptance.

YES ✓ NO_____

Authorized Signature: Xavier Burciaga

Printed Name & Title: Xavier Burciaga, President

Respondent's Tax ID: 86-3645262 Telephone: 210-905-4645

If Respondent is a Corporation or other legal entity, please attach a corporate resolution or other appropriate official documentation that states that the person signing this Solicitation Response is an authorized person to sign for and legally bind the corporation or entity.

DocuSign Envelope ID: 92CE7463-1F84-4F18-BBA1-9485EF2A47A2

System for Award Management (SAM)

Privacy Impact Assessment (PIA)

July 16, 2020

POINT *of* CONTACT

Richard Speidel

gsa.privacyact@gsa.gov

Chief Privacy Officer
GSA IT
1800 F Street NW
Washington, DC 20405

DocuSign Envelope ID: 92CE7463-1F84-4F18-BBA1-9485EF2A47A2

Instructions for GSA employees and contractors:

This template is designed to help GSA employees and contractors comply with the E-Government Act of 2002, Section 208. GSA conducts privacy impact assessments (PIAs) for electronic information systems and collections in accordance with CIO 1878.3 Developing and Maintaining Privacy Threshold Assessments, Privacy Impact Assessments, Privacy Act Notices, and System of Records Notices. The template is designed to align with GSA business processes and can cover all of the systems, applications, or projects logically necessary to conduct that business.

The document is designed to guide GSA Program Managers, System Owners, System Managers, and Developers as they assess potential privacy risks during the early stages of development and throughout the system, application, or project's life cycle.

The completed PIA shows how GSA builds privacy protections into technology from the start. Completed PIAs are available to the public at gsa.gov/pia.

Each section of the template begins with a statement of GSA's commitment to the Fair Information Practice Principles (FIPPs), a set of eight precepts that are codified in the Privacy Act of 1974.

Please complete all sections in italicized brackets and then delete the bracketed guidance, leaving only your response. Please note the instructions, signatory page, and document revision history table will be removed prior to posting the final PIA to GSA's website. **Please send any completed PIAs or questions to gsa.privacyact@gsa.gov.**

DocuSign Envelope ID: 92CE7463-1F84-4F18-BBA1-9485EF2A47A2

Stakeholders

Name of Information System Security Manager (ISSM):

- Joseph Hoyt

Name of Program Manager/System Owner:

- Calvin Densmore

Signature Page

Signed:

DocuSigned by:
Joseph Hoyt
CA8EF810EDA7425...

Information System Security Manager (ISSM)

DocuSigned by:
Calvin Densmore
3BBDED13A27A471...

Program Manager/System Owner

DocuSigned by:
Richard Speidel
171D5411183F40A...

Chief Privacy Officer (CPO) - Under the direction of the Senior Agency Official for Privacy (SAOP), the CPO is responsible for evaluating the PIA and ensuring the program manager/system owner has provided complete privacy-related information.

Document Revision History

DocuSign Envelope ID: 92CE7463-1F84-4F18-BBA1-9485EF2A47A2

Date	Description	Version of Template
01/01/2018	Initial Draft of PIA Update	1.0
04/23/2018	Added questions about third-party services and robotics process automation (RPA)	2.0
6/26/2018	New question added to Section 1 regarding Information Collection Requests	2.1
8/29/2018	Updated prompts for questions 1.3, 2.1 and 3.4.	2.2
11/5/2018	Removed Richard's email address	2.3
11/28/2018	Added stakeholders to streamline signature process and specified that completed PIAs should be sent to gsa.privacyact@gsa.gov	2.4
4/15/2019	Updated text to include collection, maintenance or dissemination of PII in accordance with e-Gov Act (44 U.S.C. § 208)	2.5
9/18/2019	Streamlined question set	3.0
2/20/2020	Removed email field from signature page	3.1

DocuSign Envelope ID: 92CE7463-1F84-4F18-BBA1-9485EF2A47A2

Table of contents

SECTION 1.0 PURPOSE OF COLLECTION

1.1 What legal authority and/or agreements allow GSA to collect, maintain, use, or disseminate the information?

1.2 Is the information searchable by a personal identifier, for example a name or Social Security number? If so, what Privacy Act System of Records Notice(s) applies to the information being collected?

1.3 Has an information collection request (ICR) been submitted to or approved by the Office of Management and Budget (OMB)? If yes, provide the relevant names, OMB control numbers and expiration dates.

1.4 What is the records retention schedule for the information system(s)? Explain how long and for what reason the information is kept.

SECTION 2.0 OPENNESS AND TRANSPARENCY

2.1 Will individuals be given notice before to the collection, maintenance, use or dissemination and/or sharing of personal information about them? If not, please explain.

SECTION 3.0 DATA MINIMIZATION

3.1 Why is the collection and use of the PII necessary to the project or system?

3.2 Will the system create or aggregate new data about the individual? If so, how will this data be maintained and used?

3.3 What controls exist to protect the consolidated data and prevent unauthorized access?

3.4 Will the system monitor members of the public, GSA employees, or contractors?

3.5 What kinds of report(s) can be produced on individuals?

3.6 Will the data included in any report(s) be de-identified? If so, how will GSA aggregate or de-identify the data?

SECTION 4.0 LIMITS ON USES AND SHARING OF INFORMATION

4.1 Is the information in the system, application, or project limited to only the information that is needed to carry out the purpose of the collection, maintenance, use, or dissemination?

4.2 Will GSA share any of the information with other individuals, Federal and/or state agencies, or private sector organizations? If so, how will GSA share the information?

4.3 Is the information collected directly from the individual or is it taken from another source? If so, what is the other source(s)?

4.4 Will the system, application, or project interact with other systems, either within GSA or outside of GSA? If so, what other system(s), application(s) or project(s)? If so, how? If so, is a formal agreement(s) in place?

SECTION 5.0 DATA QUALITY AND INTEGRITY

5.1 How will GSA verify the information collection, maintenance, use, or dissemination for accuracy and completeness?

SECTION 6.0 SECURITY

DocuSign Envelope ID: 92CE7463-1F84-4F18-BBA1-9485EF2A47A2

6.1 Who or what will have access to the data in the project? What is the authorization process for access to the project?

6.2 Has GSA completed a system security plan (SSP) for the information system(s) supporting the project?

6.3 How will the system be secured from a physical, technical, and managerial perspective?

6.4 Are there mechanisms in place to identify and respond to suspected or confirmed security incidents and breaches of PII? If so, what are they?

SECTION 7.0 INDIVIDUAL PARTICIPATION

7.1 What opportunities do individuals have to consent or decline to provide information? Can they opt-in or opt-out? If there are no opportunities to consent, decline, opt in, or opt out, please explain.

7.2 What procedures allow individuals to access their information?

7.3 Can individuals amend information about themselves in the system? If so, how?

SECTION 8.0 AWARENESS AND TRAINING

8.1 Describe what privacy training is provided to users, either generally or specifically relevant to the project.

SECTION 9.0 ACCOUNTABILITY AND AUDITING

9.1 How does the system owner ensure that the information is being used only according to the stated practices in this PIA?

DocuSign Envelope ID: 92CE7463-1F84-4F18-BBA1-9485EF2A47A2

Document purpose

This document contains important details about System for Award Management (SAM). To accomplish its mission *GSA* Integrated Award Enterprise (IAE) must, in the course of SAM, collect personally identifiable information (PII) about the people who use such products and services. PII is any information [1] that can be used to distinguish or trace an individual's identity like a name, address, or place and date of birth.

GSA uses Privacy Impact Assessments (PIAs) to explain how it collects, maintains, disseminates uses, secures, and destroys information in ways that protect privacy. This PIA comprises sections that reflect GSA's privacy policy and program goals. The sections also align to the Fair Information Practice Principles (FIPPs), a set of eight precepts codified in the Privacy Act of 1974.[2]

A. System, Application, or Project Name:

System for Award management (SAM)

B. System, application, or project includes information about:

The SAM collects information on entities registering to do business with the U.S. government in accordance with Federal Acquisition Regulation (FAR) Subpart 4.11 and Title 2 of the Code of Federal Regulations (2 CFR) Subtitle A, Chapter I, and Part 25.

Part of the registration data collected from entities which pay U.S. taxes is the Taxpayer Identification Number (TIN). The TIN is usually the entity's Employer Identification Number (EIN). However, sole proprietors and single-member limited liability companies can elect to use their Social Security Number (SSN) as their TIN.

C. For the categories listed above, how many records are there for each?

Currently, there are approximately 5.6 million of unique entities records in SAM.

- Entity Management Records (Registered Entities): 2331615
- Shell Records (Non-Registered Entities): 3063921
- Exclusions: Count :203021

D. System, application, or project includes these data elements:

DocuSign Envelope ID: 92CE7463-1F84-4F18-BBA1-9485EF2A47A2

SAM provides detailed, public descriptions of federal assistance listings available to State and local governments (including the District of Columbia); federally recognized Indian tribal governments, Territories (and possessions) of the United States; domestic public, quasi- public, and private profit and nonprofit organizations and institutions; specialized groups, and individuals. There are different types of award data, or "domains". A user will be able to search across all domains or choose a specific domain to search within a specific data set. The table below provides a view of detailed records for all domains:

Domain	Description
Assistance Listings	Find assistance listings by entering a keyword, Catalog of Federal Domestic Assistance (CFDA) number, or agency name into the search field.
Contract Opportunities	Find contract opportunities by entering a keyword, solicitation ID, or an agency name into the search field.
Contract Awards	Find contract award data by entering a keyword, award type, North American Industry Classification System (NAICS) Code, Product Service Code (PSC), or DUNS ("data universal numbering system").
Entity Registrations	Find entity registrations by entering an entity's name into the search field. The search filter will automatically display "active" entities, but you can also switch to view only inactive results.
Entity Exclusions	Find exclusions associated with a particular entity by entering the entity's name, DUNS number, or Commercial and Government Entity (CAGE) code. To search for a person, type in his or her name. Be sure to confirm that you've found the correct person—it's easy to misidentify someone if he or she has a common name. If no exclusion record is found for the entity, the entity does not have an

DocuSign Envelope ID: 92CE7463-1F84-4F18-BBA1-9485EF2A47A2

The Integrated Award Environment (IAE) is a Presidential E-Gov initiative. Its purpose is to simplify, unify and streamline the complex federal award process for government buyers and sellers. There are acquisition functions common to all agencies that are now centrally managed as shared systems. This is accomplished through reuse, sharing data, linking systems and making data accessible to all.
SAM.gov stores entity information for those wishing to do business with the Federal Government. Entities are required to update their information anually as mandated by regulation. Entities have the responsibility to maintain their own information to assist contracting and grant-making officials in their pre-award determinations and management of the federal awards throughout the lifecycle.
The following PII are collected during registration:

- Taxpayer Identification Number (TIN). The TIN is usually the entity's Employer Identification Number (EIN). However, sole proprietors and single-member limited liability companies can elect to use their Social Security Number (SSN) as their TIN
- Legal Business Name and Physical Address.
- Bank's routing number, bank account number, and bank account type.

SECTION 1.0 PURPOSE OF COLLECTION

1.1 What legal authority and/or agreements allow GSA to collect, maintain, use, or disseminate the information?

For the Entity Management functional area of SAM, the authorities for collecting the information and maintaining the system are the Federal Acquisition Regulation (FAR) Subparts 4.11 and 52.204 and 2 CFR, Subtitle A, Chapter I, and Part 25, as well as 40 U.S.C. 121(c). For the exclusions portion of the Performance Information functional area, the authorities for collecting the information and maintaining the system are FAR Subparts 9.4 and 28.2, Executive Order 12549 (February 18, 1986), Executive Order 12689 (August 16, 1989).

1.3 Has an Information Collection Request (ICR) been submitted to or approved by the Office of Management and Budget (OMB)? If yes, provide the relevant names, OMB control numbers, and expiration dates.

System records are retained and disposed of according to GSA records maintenance and disposition schedules, the requirements of the Recovery Board, and the National Archives and Records Administration. For the Entity Management functional area, SAM allows users to update and delete their own entity registration records. For the exclusions portion of the

DocuSign Envelope ID: 92CE7463-1F84-4F18-BBA1-9485EF2A47A2

Performance Information functional area, electronic records of past exclusions are maintained permanently in the archive list for historical reference. Federal agencies reporting exclusion information in SAM should follow their agency's guidance and policies for disposition of paper records.

1.4 Has a records retention schedule been approved by the National Archives and Records Administration (NARA)? Explain how long and for what reason the information is retained.

System records are retained and disposed of according to GSA records maintenance and disposition schedules, the requirements of the Recovery Board, and the National Archives and Records Administration. For the Entity Management functional area, SAM allows users to update and delete their own entity registration records. For the exclusions portion of the Performance Information functional area, electronic records of past exclusions are maintained permanently in the archive list for historical reference. Federal agencies reporting exclusion information in SAM should follow their agency's guidance and policies for disposition of paper records.

SECTION 2.0 OPENNESS AND TRANSPARENCY

2.1 Will individuals be given notice before the collection, maintenance, use or dissemination of personal information about themselves? If not, please explain.

Yes users are presented a Privacy Policy at the bottom of the login screen that explains what information is being collected and for what reason.

Link to the Policy: https://sam.gov/SAM/pages/public/generalInfo/samPrivacyPolicy.jsf

For the Entity Management functional area, individuals know that SAM contains a record on them because they created the record. For the exclusions portion of the Performance Management functional area, individuals receive prior notification that their names will be contained in SAM from the Federal agency that takes the action to exclude them from Federal procurement and non-procurement programs.

SECTION 3.0 DATA MINIMIZATION

3.1 Why is the collection and use of the PII necessary to the system, application, or project?

DocuSign Envelope ID: 92CE7463-1F84-4F18-BBA1-9485EF2A47A2

Exclusion records on individuals contain certain information that will never be displayed publicly, e.g. street address information, as well as the SSN or TIN. Agencies disclose the SSN of an individual to verify the identity of an individual, only if permitted under the Privacy Act of 1974 and, if appropriate, the Computer Matching and Privacy Protection Act of 1988, as codified in 5 U.S.C. 552(a).

3.2 Will the system, application, or project create or aggregate new data about the individual? If so, how will this data be maintained and used?

No new data will be created or derived based on the information collected.

3.3 What protections exist to protect the consolidated data and prevent unauthorized access?

In accordance with the Federal Information Security Management Act of 2002 (FISMA), every FSA system must receive a signed Authority to Operate (ATO) from a designated FSA official. The ATO process includes a rigorous assessment of security controls, a plan of actions and milestones to remediate any identified deficiencies, and a continuous monitoring program. This PIA is included in the updated ATO package which replaced the package expiring on March 14, 2018.

FISMA controls implemented comprise a combination of management, operational, and technical controls, and include the following control families: access control, awareness and training, audit and accountability, security assessment and authorization, configuration management, contingency planning, identification and authentication, incident response, maintenance, media protection, physical and environmental protection, planning, personnel security, risk assessment, system and services acquisition, system and communications protection, system and information integrity, and program management.

3.4 Will the system monitor the public, GSA employees, or contractors?

No, there is no monitoring capability in SAM.

3.5 What kinds of report(s) can be produced on individuals?

SAM does not produce any reports on individuals. All reports are pertaining to contracts, grants, or FAR requirements. In the event of a sole proprietor, the report will be pertaining to contracts, grants, or FAR requirements but may contain PII, if PII is used in the sole proprietor's business operations.

3.6 Will the data included in any report(s) be de-identified? If so, what process(es) will be used to aggregate or de-identify the data?

DocuSign Envelope ID: 92CE7463-1F84-4F18-BBA1-9485EF2A47A2

No, it will not be used to aggregate or de-identify

SECTION 4.0 LIMITS ON USING AND SHARING INFORMATION

4.1 Is the information in the system, application, or project limited to only the information that is needed to carry out the purpose of the collection?

SAM maintains this Government wide system of records to enable Federal agencies to determine who is registered to do business with the Federal Government, and to identify individuals who have been excluded from participating in Federal procurement and non-procurement (financial or non-financial assistance and benefits programs), throughout the Federal Government. In some instances a record may demonstrate an exclusion applies only to the agency taking the action, and therefore does not have Government wide effect. The purpose of the exclusions is to protect the Government from non-responsible contractors and individuals, ensure proper management throughout the Federal government, and protect the integrity of Federal activities.

4.2 Will GSA share any of the information with other individuals, federal and/or state agencies, or private-sector organizations? If so, how will GSA share the information?

Yes. Federal agency Contract Writing Systems (CWS), grants management systems, and financial systems will all use data from SAM. They go through a data access request process to allow them certain levels of data. The data is provided over encrypted connections and are either FTP or web services (XML). Part of the access process includes a Non-Disclosure Agreement and System Authorization Access Request which is agreed to by the requestor during the data access request process and includes user responsibility regarding the data.

4.3 Is the information collected directly from the individual or is it taken from another source? If so, what is the other source(s)?

Entity records are created by the person or entity wishing to do business with the government. Exclusion records are created by Federal agency suspension and debarment personnel.

4.4 Will the system, application, or project interact with other systems, applications, or projects, either within or outside of GSA? If so, who and how? Is a formal agreement(s) in place?

DocuSign Envelope ID: 92CE7463-1F84-4F18-BBA1-9485EF2A47A2

For SAM to interact with other systems, either internally or externally to GSA, there first must be a MOU/ISA established. The MOU is reviewed and approved by both partnering agencies. On the GSA side the ISA/MOU is approved by the Information System Security Officer (ISSO) and the Authorizing Official (AO) for SAM. Data is transmitted either via a persistent pipe (TI, T3, VPN, SFTP, etc.) or a non-persistent pipe (internet, web portal, http, etc.)

SECTION 5.0 DATA QUALITY AND INTEGRITY

5.1 How will the information collected, maintained, used, or disseminated be verified for accuracy and completeness?

To verify accuracy system validation rules exist. Entity-entered TINs are validated by the IRS to ensure the TIN and Taxpayer Name provided matches the TIN and name control on file with the IRS. Access to edit an entity record is controlled though roles and permissions.

For completeness system validation rules ensuring required fields are populated correctly are in place. A record cannot be completed without all mandatory fields being completed.

SECTION 6.0 SECURITY

6.1 Who or what will have access to the data in the system, application, or project? What is the authorization process to gain access?

SAM has a System Security Plan (SSP) as well as a user guide that thoroughly documents access control, roles and permissions. Roles are based on required function of the users, and include the entities, government procurement personnel, government debarment personnel etc.

6.2 Has GSA completed a System Security Plan (SSP) for the information system(s) or application?

Yes, in December 17, 2019. GSA categorizes all of its systems using Federal Information Processing Standard Publication 199, Standards for Security Categorization of Federal Information and Information Systems (FIPS 199). Sam is conducted on systems rated "moderate impact." Based on this categorization, GSA implements security controls from 15 Version 1.0: March 27, 2019

NIST Special Publication 800-53, "Recommended Security Controls for Federal Information Systems and Organizations" to secure its systems and data.

DocuSign Envelope ID: 92CE7463-1F84-4F18-BBA1-9485EF2A47A2

6.3 How will the system or application be secured from a physical, technical, and managerial perspective?

SAM resides in the AWS within the GSA Business Service Platform (BSP) Platform as a Service (PaaS), ultimately leveraging the Amazon Web services US East (N.Virginia) Region.

6.4 Are there mechanisms in place to identify and respond to suspected or confirmed security incidents and breaches of PII? If so, what are they?

SAM.gov utilizes GSA's enterprise Incident Response Plan (Incident Response (IR) CIO-IT Security-01-02) and has procedures in place for handling security incidents. GSA monitors use of its systems and is responsible for reporting any potential incidents directly to the Information Systems Security Officer. This Officer coordinates the escalation, reporting and response procedures on behalf of GSA.

SECTION 7.0 INDIVIDUAL PARTICIPATION

7.1 What opportunities do individuals have to consent or decline to provide information? Can they opt-in or opt-out? If there are no opportunities to consent, decline, opt in, or opt out, please explain.

Individuals do not have opportunities to opt out or decline to provide information to SAM. Most of the data collected by the system is related to entities which are provided by a company pursuant to applicable laws and regulations rather than directly from users. Additionally, data collected by SAM entities is related to their access and use of the system and is collected through use of the system

7.2 What procedures allow individuals to access their information?

Since individuals create the entity registration record in SAM and can delete or amend the record, there should not be any questions about that entry. However, individuals can contact the system manager with questions about the operation of the Entity Management functional area. Requests from individuals to determine the specifics of an exclusion record included in SAM should be addressed to the Federal agency POC identified in the exclusion record.

7.3 Can individuals amend information about themselves? If so, how?

DocuSign Envelope ID: 92CE7463-1F84-4F18-BBA1-9485EF2A47A2

Yes, individuals can contact the system manager with questions about the operation of the Entity Management functional area.

SECTION 8.0 AWARENESS AND TRAINING

8.1 Describe what privacy training is provided to users, either generally or specifically relevant to the system, application, or project.

GSA requires privacy and security training for all personnel and has policies in place that governs the proper handling of PII. 17 Versions 1.0: March 27, 2019

GSA employees receive annual security awareness training and are specifically instructed on their responsibility to protect the confidentiality of PII. All SAM system users with access to PII are required to submit to a security background check and to obtain a minimum of a background investigation.

SECTION 9.0 ACCOUNTABILITY AND AUDITING

9.1 How does the system owner ensure that the information is used only according to the stated practices in this PIA?

GSA requires privacy and security training for all personnel, and has policies that govern the proper handling of PII. GSA has also implemented security and privacy controls for its systems, Further, OMB requires the GSA to document these privacy protections in submissions for Information Collection Requests processed under the Paperwork Reduction Act.

All GSA systems are subject to periodic audits to ensure that GSA protects and uses information appropriately. GSA takes automated precautions against overly open access controls. GSA's CloudLock tool searches all GSA documents stored on the Google Drive for certain keyword terms and removes the domain-wide sharing on these flagged documents until the information is reviewed. GSA agents can then review the flagged items to ensure no sensitive information has been accidentally placed in or inadvertently shared via these files.

---

[1]OMB Memorandum *Preparing for and Responding to the Breach of Personally Identifiable Information* (OMB M-17-12) defines PII as: "information that can be used to distinguish or trace an individual's identity, either alone or when combined with other information that is linked or linkable to a specific individual." The memorandum notes that "because there are many different types of information that can be used to distinguish or trace an individual's identity, the term PII is necessarily broad."

[2] Privacy Act of 1974, 5 U.S.C. § 552a, as amended.

HAYS COUNTY PURCHASING OFFICE
Stephanie Hunt, Purchasing Agent
712 S. Stagecoach Trail, Ste. 1012
San Marcos, Texas 78666
512-393-2267 • purchasing@co.hays.tx.us

January 30, 2024

ADDENDUM #1
IFB 2024-B07 Cemetery Maintenance

Please find attached Addendum #1 to **IFB 2024-B07 Cemetery Maintenance.** All questions were answered by Hays County staff.

Attached to Addendum 1:

- Questions & Answers

Acknowledge receipt of this addendum by signing and returning this page with your proposal.

Signature

Primero TX LLC dba Primero TX Landscaping

Company Name Date

AGENDA ITEM REQUEST FORM: J. 13.

Hays County Commissioners Court

Date: 03/26/2024

Requested By: Tammy Crumley

Sponsor: Commissioner Shell

Agenda Item:

Discussion and possible action to award and execute a contract for IFB 2024-B06 Sentinel Peak - Asbestos Abatement & Building Demolition to Tasman Geopsciences, Inc. dba Tasma, Inc. and amend the budget accordingly. **SHELL/T.CRUMLEY**

Summary:

On February 6, 2024, the Commissioner Court approved the Purchasing Office to solicit bids for IFB 2024-B06 Sentinel Peak - Asbestos Abatement & Building Demolition. The Purchasing Office received three (3) bids, but two (2) bids were deemed non-responsive. It is staff's recommendation to award and execute a contract with Tasman Geosciences, Inc. dba Tasman, Inc.

Fiscal Impact:

Amount Requested: $191,300
Line Item Number: 154-813-97-386.5741

Budget Office:

Source of Funds: 2020 Voter Approved Park Bond Fund (issued in 2021)
Budget Amendment Required Y/N?: Yes
Comments: N/A
$191,300 - Increase Misc. Capital Improvement 154-813-97-386.5741
($191,300) - Decrease General Project Contributions 154-800-97.5600

Purchasing Office:

Purchasing Guidelines Followed Y/N?: Yes
Comments: Invitation for Bid (IFB) 2024-B06 Sentinel Peak - Asbestos Abatement & Building Demolition

Auditor's Office

G/L Account Validated Y/N?: Yes
New Revenue Y/N?: N/A
Comments:

Attachments

(PE) Contract IFB 2024-B06

STANDARD FORM OF CONTRACT
Hays County, Texas

STATE OF TEXAS

HAYS COUNTY

THIS STANDARD FORM OF CONTRACT (the "Contract") is by and between **HAYS COUNTY, TEXAS**, a political subdivision of the State of Texas (hereinafter called "County") and **Tasman Geosciences, Inc. dba Tasman, Inc.** (hereinafter called Contractor").

The County and Contractor, in consideration of the mutual covenants hereinafter set forth, agrees as follows:

Article 1. Work

Contractor shall complete all Work as specified or indicated in the Contract Documents. The "Project is generally described as follows:

Project No. **IFB 2024-B06 – Sentinel Peak – Asbestos Abatement and Building Demolition**
(Project Name)

Article 2. Engineer of Record

The Project has been designed by **HALFF Associates, Inc.** who is hereinafter called the "Engineer of Record" and who is to act as the County's design professional.

Article 3. Contract Time

The Work shall be Substantially Completed in **Ninety (90) Calendar Days** (the "Contract Time"). Following Substantial Completion, the Contractor shall proceed expeditiously with adequate forces and shall achieve Final Completion within the time specified in the Special Conditions.

Article 4. Contract Price

County shall pay Contractor for completions of the Work in accordance with the Contract Documents an amount in current funds equal to the sum of the amounts determined pursuant to Paragraph 4.1 below (the "Contract Price")

4.1 For all Unit price Work, an amount equal to the sum of the established unit price for each separately identified item of the Unit Price Work times the estimated quantity if that item as indicated in the Bid Form Schedule of Rates and Prices "Exhibit A", and as totaled below:

TOTAL OF ALL UNIT PRICES: (written out) $191,300.00
One hundred ninety one thousand and three hundred dollars.

As provided in the Standard Specifications, estimated quantities are not guaranteed, and determinations of actual quantities and classifications are to be made by the Engineer of Record.

Article 5. Contractor's Representations

In order to induce County to enter into this Contract, Contractor makes the following representations:

5.1 Contractor has examined and carefully studied the Contract Documents and the other related data identified in the Bidding Documents including the "technical data".

5.2 Contractor has visited the site and become familiar with and is satisfied as to the general, local and site conditions that may affect cost, progress, performance or furnishing of the Work.

5.3 Contractor is familiar with and is satisfied as to all federal, state and local Laws and Regulations that may affect cost, progress, performance and furnishing of the Work.

5.4 Contractor has carefully studied all reports of explorations and tests of subsurface conditions at or contiguous to the site and all drawings of physical conditions in or relating to existing surface or subsurface structures at or contiguous to the site which has been identified. Contractor acknowledges that such reports and drawings are not Contract Documents and may not be complete for Contractor's purposes. Contractor acknowledges that the County and Engineer of Record do not assume responsibility for the accuracy or completeness if information and data shown or indicated in the Contract Documents with respect to Underground Facilities at or contiguous to the site.

5.5 Contractor has correlated the information known to Contractor, information and observations obtained from visits to the site, reports and drawings identified in the Contract Documents and all additional examinations, investigations, explorations, tests, studies and date with the Contract Documents.

5.6 Contractor has given Engineer of Record written notice of all conflicts, errors, ambiguities or discrepancies that Contractor has discovered in the Contract Documents and the written resolution thereof by Engineer of Record is acceptable to Contractor, and the Contract Documents are generally sufficient to indicate and convey understanding of all terms and conditions for performance and furnishing of Work.

5.7 Contractor represents and agrees that there are no obligations, commitments, or impediments of any kind that will limit or prevent performance of its obligations under the Contract Documents.

5.8 Contractor warrants, represents, and agrees that if (i) it is a corporation or limited liability company, then it is a corporation duly organized, validly existing and in good standing to conduct business in the State of Texas, or a foreign corporation or limited liability company duly authorized and in good standing to conduct business in the State of Texas, that it has all necessary corporate power and has received all necessary corporate approvals to execute and deliver this Contract, and the individual executing the Contract on behalf of the Contractor has been duly authorizes to act for and bind Contractor; or (ii) if it is a partnership, limited partnership, or limited liability partnership, then it has necessary partnership power and has secured all necessary approvals to execute and deliver this Contract and perform all its obligations under the Contract Documents; and the individual executing this Contract on behalf of Contractor has been duly authorized to act for and bind Contractor.

5.9 Neither the execution and delivery of this Contract by Contractor nor the performance of its obligations under the Contract Documents will result in the violation of any provision, if a corporation, of its articles of incorporation or bylaws, if a limited liability company, of its articles of organization or regulations, or if a partnership, by any partnership agreement by which Contractor is bound, or any agreement by which

Contractor is bound or to the best of the Contractor's knowledge and belief, will conflict with any order or decree of any court of governmental instrumentality relating to Contractor.

5.10 Except for the obligation of the County to pay Contractor the Contract Price pursuant to the terms of the Contract Documents, and to perform certain other obligations pursuant to the terms and conditions explicitly set forth in the Contract Documents, County shall have no liability to Contractor or to anyone claiming through or under Contractor by reason of the execution or performance of the Contract. Notwithstanding any obligation or liability of County to Contractor, no present or future partner or affiliate of County or any agent, officer, director, or employee of County, or of the various departments comprising Hays County, or anyone claiming through or under Contractor by reason of the execution or performance of this Contract.

Article 6. Contract Documents

The "Contract Documents", which comprise the entire agreement between Hays County and Contractor concerning the Work, consist of the following:

6.1 This Standard Form of Contract

6.2 Performance Bond

6.3 Payment Bond

6.4 Maintenance Bond

6.5 Certificate of Insurance

6.6 Wage Rates

6.7 Standard Specifications

6.8 Special Provisions

6.9 Special Conditions

6.10 Technical Specifications

6.11 Plan Drawings

6.12 Addendum numbers ____1___to ___3___, inclusive

6.13 Contractor's Bid Form

6.14 Documentation submitted by Contractor prior to Notice of Award

6.15 The following which may be delivered or issued after the Effective Date of the Contract and are not attached hereto: All Written Amendments and other documents amending, modifying or supplementing the Contract Documents pursuant to applicable sections in the Standard Specifications.

The documents listed in paragraphs 6.2 et seq. above are attached to this Contract (except as expressly noted otherwise above).

There are no Contract Documents other than those listed above in this Article 6. The Contract Documents may only be amended, modified or supplemented as provided in the Standard Specifications.

Article 7. Miscellaneous

7.1 Terms used in this contract which are defined in the Standard Specifications will have the meanings included in the Standard Specifications.

7.2 No assignment by a party hereto of any rights under or interests in the Contract Documents will be binding on another party hereto without the written consent of the party sought to be bound; and, specifically but without limitation, moneys that may become due and moneys that are due may not be assigned without such consent (except to the extent that the effect of this restriction may be limited by law), and unless specifically stated to the contrary in any written consent to an assignment will release or discharge the assignor from any duty or responsibility under the Contract Documents.

7.3 The County and Contractor each binds itself, its partners, successors, assigns and legal representatives to the other party hereto, its partners, successors, assigns and legal representatives in respect to all covenants, agreements, and obligations contained in the Contract Documents.

7.4 Any provision or part of the Contract Documents held to be void or unenforceable under any Law or Regulation shall be deemed stricken, and all remaining provisions shall continue to be valid and binding upon the County and Contractor, who agree that the Contract Documents shall be reformed to replace such stricken provision or part thereof with a valid and enforceable provision that comes as close as possible to expressing the intention if the stricken position.

7.5 Each Party to this Contract hereby agrees and acknowledges that venue and jurisdiction of any suit, right, or cause of action arising out of or in connections with this Contract shall lie exclusively in Hays County, Texas. Furthermore, this Contract shall be governed by and construed in accordance with the laws of the State of Texas, excluding, however its choice of law rules.

7.6 The parties to this Contract agree that during the performance of the services under this Contract they will not discriminate against any employee or applicant for employment because of race, color, religion, sex, or national origin. The parties to this Contract will take affirmative action to ensure that applicants are employed and that employees are treated during employment, without regard to their race, color, religion, sex or national origin. Such action shall include, but not be limited to the following: employment, upgrading, demotion, or transfer; termination; rates of pay or other forms of compensation, and selection for training including apprenticeship.

7.7 This Contract is for the sole and exclusive benefit of the parties hereto, and nothing in this Contract, express or implied, is intended to confer or shall be construed as conferring upon any other person any rights, remedies or any other type or types of benefits.

7.8 Each party to this Contract acknowledges that it and its counsel have reviewed this Contract and that the normal rules of construction ae not applicable and there will be no presumption that any ambiguities will be resolves against the drafting party in the interpretation of this Contract.

7.9 Each party to the Contract, in the performance of this Contract, shall act in an individual capacity and not as agents, employees, partners, joint ventures or associates of one another. The employees or agents of one

party shall not be deemed or construed to be the employees or agents of the other party for any purposes whatsoever.

7.10 Nothing in this Contract shall be deemed to waive, modify or amend any legal defense available at law or in equity to County, its past or present officers, employees, or agents or employees, nor to create any legal rights or claim on behalf of any third party. County does not waive, modify, or alter to any extent whatsoever the availability of the defense of governmental immunity under the laws of the State of Texas and of the United States.

7.11 To the Extent, if any, that any provision in this Contract is in conflict with Tex. Gov't Code 552.001 et seq., as amended (the "Public Information Act"), the same shall be of no force or effect. Furthermore, it is expressly understood and agreed that County, its officers and employees may request advice, decisions and opinions of the Attorney General of the State of Texas in regard to the application of the Public Information Act to any items or data furnished to County as to whether or not the same are available to the public. It is further understood that County's officers and employees shall have the right to rely on the advice, decisions and opinions of the Attorney General, and the County, its officers and employees shall have no liability or obligation to any party hereto for the disclosure to the public, or to any person or persons, of any items or data furnished to County by a party hereto, in reliance of any advice, decision or opinion of the Attorney General of the State of Texas.

7.12 County and Contractor have signed this Contract in triplicate. One counterpart each has been delivered to the County, Contractor and Engineer of Record. All portions of the Contract Documents have been signed, initialed, or identified by County and Contractor or identified by Engineer of Record on their behalf.

7.13 This Contract and Contract Documents represent the entire and integrates agreement between the parties hereto and supersedes all prior negotiations, representations, or agreements, either oral or written. This Contract may be amended only by written instrument signed by each party to this Contract. NO OFFICIAL, EMPLOYEE, AGENT, OR REPRESENTATIVE OF THE COUNTY HAS ANY AUTHORITY, EITHER EXPRESS OR IMPLIES, TO AMEND THIS CONTRACT, EXCEPT PURSUANT TO SUCH EXPRESS AUTHORITY AS MAY BE GRANTED BY THE HAYS COUNTY COMMISSIONERS COURT.

This Contract will be effective on _____, 20_____ (which is the "Effective Date" of the Contract)

Hays County	**Tasman Geosciences, Inc. dba Tasman, Inc.**
By:_____	By:_____
Printed Name: Rueben Becerra, _____	Printed Name: Robert M. Cornez _____
Title: Hays County Judge _____	Title: Chief Risk Officer _____
(CORPORATE SEAL)	
Attest:_____	Attest: _____
Dr. Elaine H. Cardenas, County Clerk	

AGENDA ITEM REQUEST FORM: J. 14.

Hays County Commissioners Court

Date: 03/26/2024

Requested By: Judge Elaine Brown
Sponsor: Commissioner Cohen
Co-Sponsor: Commissioner Ingalsbe

Agenda Item:

Discussion and possible action to authorize the Mental Health Specialty Court to purchase consumable items for the Spring Mental Health Workshops to be held April 4th, 5th and 11th and amend the budget accordingly. **COHEN/INGALSBE/BROWN**

Summary:

The County Courts at Law Mental Health Court are hosting a series of workshops in April to inform and educate stakeholders on various mental health related topics from subject-matter experts and clinicians. Breakfast and lunch will be served to those in attendance as well funding to certify the conference in order to offer Continuing Education Unit credits (CEU's) for Licensed Clinical Social Workers, Licensed Professional Counselors and Attorneys.

- Mental Health and Law: (50-60 attendees)

- Texas Judicial Commission on Mental Health
- Mental Health Courts (Bexar, Travis, and Hays)
- Jail Diversion Center (Williamson County)
- Assisted Outpatient Treatment Program (AOT - El Paso County)
- Competency Restoration
- Community Courts (Downtown Austin Community Court)
- Emergency Detentions and Civil Division (Hays County Sheriff's Dept and DA's Office)

- Mental Health, Substance Use, Trauma, Homelessness, Domestic Violence (40 attendees)

- Mental Health 101 and Lived Experience Presentation
- Substance Use Training - ICON
- Trauma Presentation -Hays Caldwell Women's Center
- Homelessness - Homeless Coalition of Hays County
- Suicide Prevention and Awareness- Hays Caldwell Suicide Prevention Coalition

- Mental Health First Aid (capped at 20 attendees)
- Mental Health FIrst Aid (online)

Fiscal Impact:

Amount Requested: $2,000
Line Item Number: 011-763-99-161.5391

Budget Office:

Source of Funds: American Rescue Plan Act (ARPA) Fund
Budget Amendment Required Y/N?: Yes
Comments: Workshop expenses will be funded through the Pct. 1 & Pct. 2 revenue loss allocation.
($2,000) - Increase Intergovernmental Revenue 011-763-99-161.4301
$2,000 - Increase Miscellaneous Expense 011-763-99-161.5391

Purchasing Office:

Purchasing Guidelines Followed Y/N?: TBD
Comments: Will need to follow purchasing guidelines when ordering the breakfast and lunch

Auditor's Office

G/L Account Validated Y/N?: Yes
New Revenue Y/N?: Yes, $2,000 in Intergovernmental Revenues from ARPA 2nd tranche
Comments:

Attachments

Itemized Consumable List

Day 1: Thursday April 4th 8:30-4:20 pm	Start	End		BREAKFAST	Fruit, Pastries, Muffins	Fruit Tray 2x 12.197 = $25.94	Walmart	25.94		
Intro: Judge Brown/Kaimi (Hays County MHC)	8:30	9:15 AM				Pastries 3x4.24 = $12.72	Walmart	12.72		
Judge Leon Grizzard (Travis County MHC)	9:15	10:00 AM	BREAK							
Judge Brent Carr (Tarrant County MHC)	10:15	11:00				Muffins 2x 3.97 (12 count) = $7.94	Walmart	7.94		
Downtown Austin Community Court (Jennifer Sowinski)	11:00	11:45 AM			Kolaches			46.60 Walmart		
LUNCH (CATERED)/networking	11:45	12:30 PM				9 x 2.75 = $22 Sausage and Cheese Kolaches	Dos Gatos	24.75		
Texas Judicial Commission on Mental Health (Molly Davis)	12:30 PM	1:15				8 x 2.75 = $22 Jalepeno and Polish Sausage Kolaches	Dos Gatos	22		
Hays County Mental Health Unit/Civil Divison (Ron Aranayado)	13:15	2:00 PM	BREAK			4 x 2.95 = $11.80 Veggie Sausage w/ Cheese Kolaches	Dos Gatos	11.8		
Williamson County and Jail Diversion (Lt. Guinn and Lt. Pokluda)	2:15	3:00 PM						$82.00		
El Paso AOT Program (Daniela Chisolm and Michael Gomez)	3:00	3:45 AM	BREAK			Coffee	Shipley's	45 (guesstimate)		
Jail Based Competency Restoration and AOT: (Tarrant County MH ADA: Nelda Caciotti and Judge McGown)	4:00 AM	4:45 AM		LUNCH		Olive Garden for 50-60 people (pasta station + salad and breadsticks	Olive Garden	511	Total Approximately for Day 1	$638.50
Day 2: Friday April 5th from 8:30-4:45 pm	Start	End		BREAKFAST	Fruit	Fruit Tray 1x 12.197 = $12.97	Walmart	12.97		
NAMI: MH 101 + Lived Experience Training	8:30	10:00 AM	BREAK		Donuts	Dozen of Donuts 2x 10.89 =21.78	Shipleys	$21.78		
	10:15	12:30				Coffee	Shipleys	$40.00		
LUNCH (CATERED/networking)	12:30	13:15			Breakfast Tacos	8 Bean + Cheese x 2.70 = 21.60	Loli's Cafe	$21.60		
ICON: Substance Use Presentation	1:15	2:00 PM				8 Chorizo and Egg x 3.20 =25.60	Loli's Cafe	25.6		
Hays Caldwell Women's Center: Trauma Presentation	2:00 PM	14:45	BREAK			8 Sausage, Cheese, Potato x 3.20 = 25.60	Loli's Cafe	25.6		
Homelessness in Hays: Nancy Heinz	3:00	3:45 PM				8 Bacon, Egg, and Cheese = 3.23 =25.84	Loli's Cafe	25.84		
Suicide Awareness Training: Ken Elliott, LPC	3:45 AM	4:30 PM		LUNCH	Jason's Deli	$13.00 Sandwich Box x 45	Jason's Deli	$585		
									Total Approximately for Day 2	$758.39
Day 3: Thursday April 11th from 8:00 -4:30 pm	Start	End		BREAKFAST	Fruit, Pastries, Muffins	Fruit Tray 1x 12.197 = $12.97	Walmart	12.97		
MHFA held by Community Action Inc and Hill Country MHDD	8:00 AM	4:30 PM				Pastries 2x 4.24 = 8.48	Walmart	8.48		
LUNCH (CATERED/networking)					Breakfast Tacos	4 Bean and Cheese x 2.70 = 10.80	Loli's Cafe	10.8		
						4 Chorizo and Egg x 3.20 = 12.80	Loli's Cafe	12.8		
						4 Sausage, Egg, Potato x 3.20 = 12.80	Loli's Cafe	12.8		
						4 Bacon, Egg, and Cheese x 3.23 = 12.92	Loli's Cafe	12.92		
				LUNCH	Sandwich Boxes with Chips/Cookie		Subway	$198		
Drinks for 120 Approximately:									Total Approximately for Day 3	$268.77
Coke (liter bottles)	8 1 liter bo	x 2.68	21.44							
Sweet Tea (gallon jug at Walmart)	6	x 2.98	17.88							
Lemonade (gallon jug at Walmart)	6	x 2.98	17.88						(without drinks)	$1,665.66
Water (package of 24 at Walmart)	3 packages (day 1)		$15.00						w/ Drinks	87.2
	2 packages (day 2)		$10.00						w/ Paper Products Approximately	$30.00
	1 package (day 3)		$5.00							
			$87.20						GRAND TOTAL:	$1,773.86

AGENDA ITEM REQUEST FORM: J. 15.

Hays County Commissioners Court

Date: 03/26/2024

Requested By: Marcus Pacheco, Director of Development Services

Sponsor: Commissioner Ingalsbe

Agenda Item

Discussion and possible action to consider granting a variance from the governing 1977 On-Site Sewage Facility (OSSF) rules for the property located at 2850 Windy Hill Rd, Buda, TX. **INGALSBE/PACHECO**

Summary

The property owner at 2850 Windy Hill Road in Buda, is proposing to construct an OSSF for a three bedroom mobile home. The 0.3 acre parcel is serviced by a public water system.

The governing rules for On-Site Sewage Facilities in place at the time the property was created as 0.30 acres, did not allow installation of a new septic tank on lots of less than 20,000 square feet or 0.46 acres in size. This was required to reduce or minimize the possibility of the transmission of waterborne diseases due to pollution of the water supplied for domestic use.

The property owner is seeking a variance to allow the installation of the septic system, and with granting of said variance, will implement equal protection measures including the type of OSSF system to be advanced treatment and advanced disposal. No additional homes will be placed on the property. Granting of this variance will allow the property owner to utilize the property as it has been and replace a temporary solution for wastewater treatment, and dissolving an environmental and public health concern.

Attachments

OSSF-2023 Variance Request

Hays County Development Services

2171 Yarrington Rd, Suite 100, Kyle Texas 78640
(P) 512-393-2150 (Web) www.hayscountytx.com

OSSF Variance Request Form

Overview:

The OSSF Variance Request Form shall be used in conjunction with an On-Site Sewage Facility Application when seeking a variance from a regulation adopted by Hays County. The decision to approve or deny a variance is at the full discretion of Hays County Development Services and/or the Hays County Commissioners Court.

Instructions:

The Variance Request Form shall be completed in its entirety. Any incomplete forms will not be accepted and returned to the Owner / Applicant. Documents are required to be attached to the Variance Request Form. Submittal of a Variance Request Form does not guarantee approval of any variance from a regulation adopted by Hays County.

Fee:

Type I – Administrative Variance - $100
Type II – Commissioners Court Determination Variance - $500

Definitions:

Applicant – A person seeking approval of an application submitted pursuant to the Hays County Development Regulations.

Owner(s) – The holder(s) of a legal or equitable interest in real property as shown by the deed records of the county in which the property is located, and which has been included in an application or Development Authorization under the Hays County Development Regulations.

Variance – A grant of relief by Hays County from a Regulation adopted by Hays County under the authority of the Hays County Commissioners Court.

Owner Information:

Business Name:

Owner Name: Ciro Moctezuma

Owner Address: 236 Running Bull Ln Kyle TX 78640

Primary Phone: 512-737-203-4105 Secondary Phone:

Primary E-mail: Secondary E-mail:

Applicant Information (if not the owner):

Applicant Name: Angela Vazquez

Applicant Address: 210 Running Bull Ln Kyle TX 78640

Primary Phone: 512-788-7334 Secondary Phone:

Primary E-mail: Angievazquez1991@gmail.com Secondary E-mail:

Property Information:

Subdivision Name: Rolling Hills

Phase: Section: 1 Block: 40.30 AC Lot: S 1/2 Of 3

If not located in a subdivision,

Survey / Abstract: NO. 1019401

Recorded (Vol/Page/Instrument): ~~17001719~~ 1, Page 214, P.R.H.C.T

Hays Central Appraisal District Property ID "R" Number: 90615751

Hays County Commissioner Precinct: ☑ 1 ☐ 2 ☐ 3 ☐ 4

RECEIVED

MAR 13 2024

Hays County
Development Services

Type of Variance (check all that apply):

- ☑ Variance to the Hays County Rules for On-Site Sewage Facilities
- ☑ Variance to Title 30 of the Texas Administrative Code, Chapter 285
- ☐ Variance to the Hays County Development Services Fee Schedule

Variance Justification:

All variance requests must be accompanied by the section of current Regulations being appealed and the reason sought for the variance. Please fill out the below section, attaching any additional sheets needed to support the reaso sought for the variance.

Chapter / Section of regulation being requested	Reason for Variance
OSSF Variance	Property not meeting the Hays County OSSF minimum Lot Size.
Rules of 1977	Section VIII - Special Restrictions and conditions, A: No new septic tank will be approved on lots of less than 20,000 squares feet. (0.46 acres).
	However, the licensing authority may approve of other types of private sewage facilities on lesser sized lots after testing and determining that no threat to public
	health or pollution will result.

Equal Protection Information

1. Describe how equal protection is being achieved for each regulation being ...

Chapter / Section of regulation being requested	Equal Protection Description
OSSF Variance	Advanced Treatment and advanced Disposal Method, and no more houses.
	RECEIVED
	MAR 13 2024 Hays County Development Services

Attach an On-Site Sewage Facility Design

1. On-Site Sewage Facility Design – A complete set of plans with a site evaluation.

Acknowledgement:

I hereby certify that I have submitted an application in compliance with the Hays County Rules for On-Site Sewage Facilities and other applicable local, state, and federal laws. I understand this Request Form will not be acted upon unless a completed application currently exists with Hays County Development Services. Submittal of this Request form without an existing application may result in immediate denial.

Owner's / Applicant's Certification:

I hereby certify that I have carefully read and completed this Request Form. All information is true and correct to the best of my knowledge. I hereby agree to comply with all provisions of local, state, and federal laws whether they are herein specified or not. As the Owner of the above-mentioned property or a duly authorized Applicant, I hereby grant permission to the County to enter the premises and make all necessary inspection and to take all other actions necessary to review and act upon this request. If not the owner, I attest to have written confirmation from the owner of the property to submit an application and Variance Request Form on his/her behalf.

Date: 03/11/24

Print Owner / Applicant Name: Ciro Moctezuma

Owner / Applicant Signature: Ciro Moctezuma

AGENDA ITEM REQUEST FORM: J. 16.

Hays County Commissioners Court

Date: 03/26/2024

Requested By: Judge Elaine Brown
Sponsor: Commissioner Ingalsbe
Co-Sponsor: Commissioner Cohen

Agenda Item:

Discussion and possible action to authorize the County Judge to execute Contract Amendment No. 1 with Haitus Wellness, LLC. related to Trauma Conscious Yoga Therapy sessions for Mental Health Court participants. **INGALSBE/COHEN/BROWN**

Summary:

This contract amendment will add yoga therapy sessions to be held by licensed clinicians for Mental Health Court participants. Trauma focused yoga is an effective modality, especially for those with an extensive history of trauma.

Fiscal Impact:

Amount Requested: $45 per person/per session
Line Item Number: 011-763-99-161.5448

Budget Office:

Source of Funds: American Rescue Plan Act (ARPA) Fund
Budget Amendment Required Y/N?: No
Comments: Funds are available in the original contract compensation cap.

Purchasing Office:

Purchasing Guidelines Followed Y/N?: Yes
Comments: Professional Services: Amendment to original contract

Auditor's Office

G/L Account Validated Y/N?: Yes
New Revenue Y/N?: N/A
Comments:

Attachments

Hiatus Wellness Contract Amendment
Trauma Yoga Therapy Flyer

FIRST AMENDMENT
TO CONTRACT
BETWEEN HAYS COUNTY AND HIATUS WELLNESS, LLC.

This First Amendment to the Contract for Therapy services between Hays County Mental Health Court and Hiatus Wellness, LLC executed on April 25, 2023 ("Agreement"). By execution of this Amendment, the parties agree that the Agreement shall be amended effective Tuesday March 26, 2024.

Hays County and Hiatus Wellness now desire to add a condition to the terms of the Agreement as more particularly set forth below:

1. **CONDITIONS PERTAINING TO MENTAL HEALTH SERVICE: (adding the following information to the contract)**

   10. Hiatus will charge MHC $45.00 per individual per session for Trauma Conscious Yoga therapy groups.

The stricken language above shall be omitted, while the underlined language above shall be added. Except for the above modifications, all other terms and conditions of the Agreement will remain unchanged, unless properly modified by subsequent amendment under the terms of the agreement. If there is conflict between this Amendment and the Agreement, the terms of this Amendment will prevail.

IN WITNESS WHEREOF, the parties hereto have executed this Amendment as of the dates set forth below.

HIATUS WELLNESS, LLC	**HAYS COUNTY, TEXAS**
_____	_____
Hiatus Wellness	**Ruben Becerra, County Judge**
DATE: _____	**DATE:** _____
ATTEST:	**ATTEST:**
_____	_____
Sharon Blasig, County Clerk	**Elaine H. Cardenas, County Clerk**

STARTING 4/3/24

MOVING THROUGH PAIN

A trauma resolution group
incorporating somatic interventions and Trauma
Conscious Yoga Method based skills

6 week series
Every Wed, 6 pm

$45 / SESSION

Email: Lora
@hiatuswellness.com

AGENDA ITEM REQUEST FORM: K. 1.

Hays County Commissioners Court

Date: 03/26/2024

Requested By:

Sponsor: Judge Becerra

Agenda Item

Executive Session pursuant to Sections 551.071 and 551.072 of the Texas Government Code: consultation with counsel and deliberation regarding the purchase, exchange, lease and/or value of real property associated with Parks and Open Space Projects being considered by Hays County. Possible discussion and/or action may follow in open court.
BECERRA

Summary

Additional information will be provided during Executive Session.

AGENDA ITEM REQUEST FORM: K. 2.

Hays County Commissioners Court

Date: 03/26/2024

Requested By:

Sponsor: Commissioner Ingalsbe

Agenda Item

Executive Session pursuant to Sections 551.071 and 551.072 of the Texas Government Code: consultation with counsel and deliberation to consider a resolution determining the necessity of and authorizing the use of the County's power of eminent domain to acquire fee simple title, and all the necessary property rights over, under and across land being Part 1: 0.0215 acres, Part 2: 0.0263 acres, and Part 3: 0.0156 acres out of that certain 247.559 acres BCG Uhland, LP, and which is required for the construction of the proposed Cotton Gin roadway improvements and utility adjustments, and take other appropriate action (Tract 35: Part 1, 2 and 3). Possible discussion and/or action may follow in open court. **INGALSBE**

Summary

AGENDA ITEM REQUEST FORM: K. 3.

Hays County Commissioners Court

Date: 03/26/2024

Requested By: Jerry H. Borcherding

Sponsor: Commissioner Shell

Agenda Item

Executive Session pursuant to Sections 551.071 and 551.074 of the Texas Government Code: deliberation regarding employment and duties of all positions within the Transportation Department. Possible discussion and/or action may follow in open court. **SHELL/BORCHERDING**

Summary

AGENDA ITEM REQUEST FORM: K. 4.

Hays County Commissioners Court

Date: 03/26/2024

Requested By:

Sponsor: Judge Becerra

Agenda Item

Executive Session Pursuant to Sections 551.071 and 551.087 of the Texas Government Code: Consultation with counsel and deliberation regarding economic development negotiations associated with Project Snap Dragon, Project Peanut Butter, Project Husky and Project Forward Motion. Possible discussion and/or action may follow in open court. **BECERRA**

Summary

AGENDA ITEM REQUEST FORM: K. 5.

Hays County Commissioners Court

Date: 03/26/2024

Requested By:

Sponsor: Commissioner Shell

Agenda Item

Executive Session pursuant to Section 551.071 of the Texas Government Code: consultation with counsel regarding pending and/or contemplated litigation involving Hays County. Possible action may follow in open court. **SHELL**

Summary

AGENDA ITEM REQUEST FORM: K. 6.

Hays County Commissioners Court

Date: 03/26/2024

Requested By:

Sponsor: Judge Becerra

Agenda Item

Executive Session pursuant to Sections 551.071 and 551.089 of the Texas Government Code: consultation with counsel and deliberation regarding the deployment and/or implementation of critical infrastructure, including but not limited to, emergency services/management response for Hays County. Possible discussion and/or action may follow in open court. **BECERRA**

Summary

AGENDA ITEM REQUEST FORM: K. 7.

Hays County Commissioners Court

Date: 03/26/2024

Requested By:

Sponsor: Commissioner Smith

Agenda Item

Executive Session pursuant to Sections 551.071 and 551.072 of the Texas Government Code: consultation with counsel and deliberation regarding Cause Numbers 22-0249-C, 22-0250-C, and 22-0251-C. Possible discussion and/or action may follow in open court. **SMITH**

Summary